Design and calibration of an artifact for evaluating laser scanning articulating arm CMMs used for measuring complex non-concurrent surfaces

Vincent D. Lee[1], Steven D. Phillips[1], Craig M. Shakarji[1], Jeffrey J. Hosto[2], Jeffrey M. Huber[2], and Barbara J. Gillich[2]
[1]Dimensional Metrology Group
National Institute of Standards and Technology
Gaithersburg, Maryland
[2]Protective Equipment Division
US Army Aberdeen Test Center
Aberdeen, Maryland

INTRODUCTION

Laser scanners mounted to articulated arm coordinate measuring machines (LS/AACMM) have been recently adopted by the US Army to evaluate ballistic threat mitigation capabilities of human worn body armor. In brief, testing of the armor is performed by placing the article under test against a clay substrate (pre-impact surface), that has been shaped to conform to the concave surface of the body armor, and firing a projectile of a known mass, shape and velocity at it. When the projectile strikes the armor, its kinetic energy is transferred into the armor and clay, resulting in an impact crater (post-impact surface) into the clay known as a back face deformation (BFD), and is an indication of the blunt-force trauma a wearer would experience. The maximum depth of the BFD is used as part of an evaluation criterion to determine if a batch of armor would be placed into service or rejected.

In the past, the measurand of the BFD was defined as the distance between the pre-impact surface, and the post-impact surface, at the point of aim, known as the "*Basic Length"* FIGURE 1. This measurement was carried out with a measurement device that was similar to a depth gauge called a bridge caliper (BC). With the BC the operator would measure the height of the clay at the point of aim for the projectile, followed by a measurement of the depth at this same point in the impact crater; this method yielded expanded $(k = 2)$ measurement uncertainties ranging from 1.6 mm to 1.9 mm, more details can be found in [1, 2]. Among the complications of the BC method is that the BFD at the point of aim—which is a point on the pre-impact surface identified by the laser sight—is not necessarily the maximum BFD depth; see FIGURE 1.

A significant metrological improvement to the BFD measurement process was the introduction of LS/AACMM technology. This allowed the measurand to be unambiguously defined as the longest line segment measured between the pre-impact surface and post-impact surface, known as the "*Maximum Distance Length*"; see FIGURE 1. Using the LS/ASCMM removed the

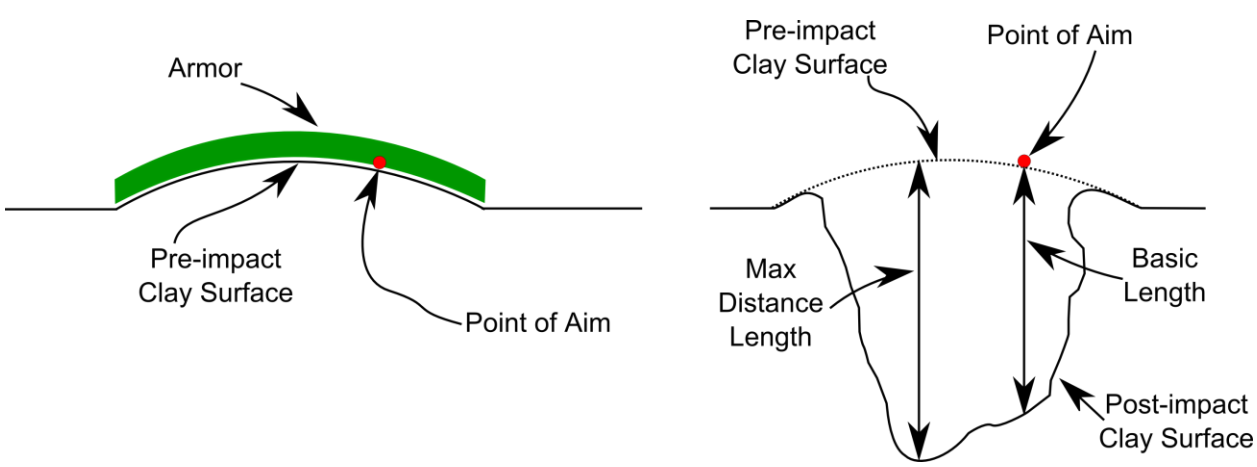

FIGURE 1: (Left) Arangement of the armor over clay, (Right) Example of impact crater in clay with respect to pre-impact surface

problematic issue that the point of aim did not necessarily correspond to the point of maximum depth length. Since the location of this maximum value is not known until the post-impact surface is created—and hence the pre-impact surface obliterated—the manual BC method is ineffective in determining the maximum depth length measurand, because detailed topography of the pre-impact surface is required prior to the post-impact surface creation. The LS/AACMM can scan and store detailed information about the pre-impact surface, so it can be recalled and compared against the post-impact surface to calculate the maximum distance length. The initial implementation of the LS/AACMM system significantly reduced the maximum distance length expanded $(k = 2)$ uncertainty to 0.37 mm for typical BFD values.

In order for the LS/AACMM system to calculate the BFD value correctly, the pre and post-impact surfaces need to be recorded in a common coordinate system so that the two surfaces can be registered correctly with respect to each other. Three coplanar conical seats on the clay's container provide an interface for the hard probe on the LS/AACMM to establish three discrete points to establish a common datum reference frame (DRF) for both data sets; see FIGURE 3, FIGURE 3, & FIGURE 4.

In brief, the evaluation and measurement of a BFD value is as follows:

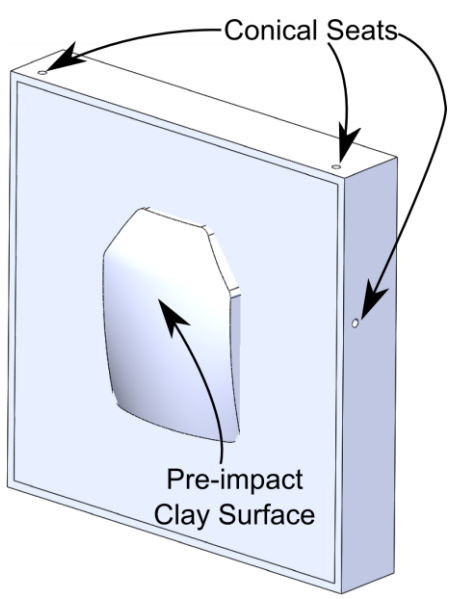

FIGURE 2: Location of conical seats on box relative to pre-impact surface

1) A DRF is established by measuring the conical seats on the box using the hard probe of the LS/AACMM.
2) The pre-impact surface is scanned and recorded using the LS/AACMM.
3) The body armor plate is attached on top of the clay surface.
4) A rifle round is fired into the armor and the armor is removed
5) The DRF is established again by measuring the conical seats on the box using the hard probe of the LS/AACMM.
6) The post-impact surface is measured using the LS/AACMM.
7) Mathematical software uses the pre- and post-impact scan data to calculate the maximum BFD distance as defined by Army specifications.

As part of a continuous improvement process, the US Army requested from NIST a measurement check standard to evaluate the performance of the LS/AACMM *in situ* on the live fire test ranges. NIST designed two working prototypes; this paper discusses their designs.

DESIGN OF TEST ARTIFACTS

To adequately test the LS/AACMM used by the Army, the following core design requirements were outlined for the artifacts.

1. Needs to be metrologically traceable
2. A BFD maximum-distance value uncertainty ≤ 0.090 mm (1/4 of initial LS/AACMM measurement uncertainty)
3. Dimensionally stable (less than 0.010 mm per year, for BFD)
4. Contain dimensional features that represent those encountered during measurement
5. Surface features that exercise software for BFD evaluation
6. Similar reflective properties of the backing clay
7. Contain a feature to represent a typical pre-impact test surface
8. Contain a feature(s) to represent a post-impact test surface
9. Contain features used to register pre and post impact scanned data
10. Mimic the BFD measurement work flow.

Considering these design requirements, several design concepts where conceived with two of them developed as prototypes for testing, calibration and delivery to the US Army for

further evaluation, and deployment in their testing facilities.

Design of Concept 1: Kinematic Design

The first design concept consists of two kinematically coupled parts, one representing the pre-impact surface and the other representing the post-impact test surface. The pre-impact surface is modeled after a partial cylindrical section, while the post-impact surface is freeform in nature and modeled after an actual BFD test shot. The test shot chosen by the US Army contains features that display fine structure and sharp changes in gradient that are believed to adequately challenge the LS/AACMM system. These two test surfaces are located and connected together using a kinematic coupling, superimposing one test surface over the other, mimicking how their clay counterparts would be positioned in an actual test (FIGURE 3). The kinematic coupling is a key feature in providing repeatable location of the two parts on the order of *1* µm [3], thus maintaining the calibration between the two parts. This assembly is then mounted into a container that resembles a clay container used in live fire testing. It also contains three coplanar conical seats for the hard probe of the LS/AACMM to establish a datum reference frame (DRF) for each surface. Calibration of this concept would follow the same work flow as measuring a BFD value during live testing by the Army. First, the centers of the three conical seats are measured to establish a DRF. Next, the part representing the pre-impact surface is scanned. Then the pre-impact surface is removed, exposing the post-impact surface. Finally, the conical seats are measured again, and the post-impact surface is scanned.

Design of Concept 2: Dual Chamber Design

The second design concept is functionally similar to the previous one, but rather than have the pre-impact surface physically superimposed over the post-impact surface, the two surfaces are contained in their own chambers with their own DRFs. Since the DRF has to be established before a scan is performed, each surface can be scanned independently as long as the DRF associated with that surface is used. The software will automatically superimpose the pre-impact surface over the post-impact surface to calculate the BFD.

The surfaces for both of these design concepts have been media blasted using 400 grit aluminum oxide powder to provide a surface finish that is cooperative with the LS/AACMM system, and similar to the clay surface.

CALIBRATION OF TEST ARTIFACTS

Calibration of these artifacts was performed on a high accuracy Leitz PMM-C 8.10.6 coordinate measurement machine with a tactile touch probe. A stylus with a 0.5 mm diameter tip was used to probe the fine structure of the post-impact surface, which was milled using a 0.0625 inch diameter ball nose end mill. To adequately digitize the surfaces a point measurement density of 20 points per mm was used. However the area which the BFD could potentially be located in spans 30 x 30 mm. Measuring this area using a high point density would be time consuming and impractical. The solution was to use a course measurement to identify a few candidate locations that could possibly contain

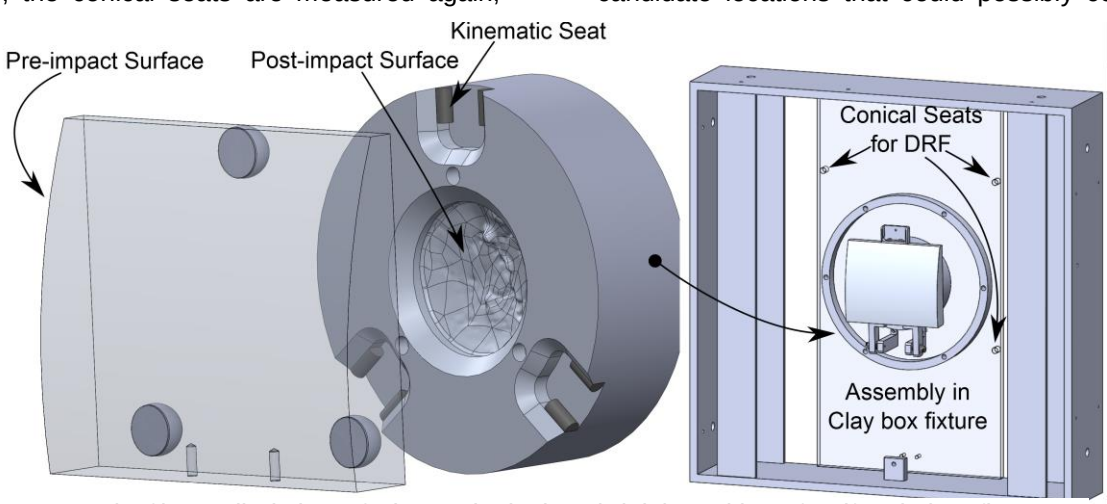

FIGURE 3: (Left) Detailed view of Kinematic design, (Right) Position of artifact in box fixture

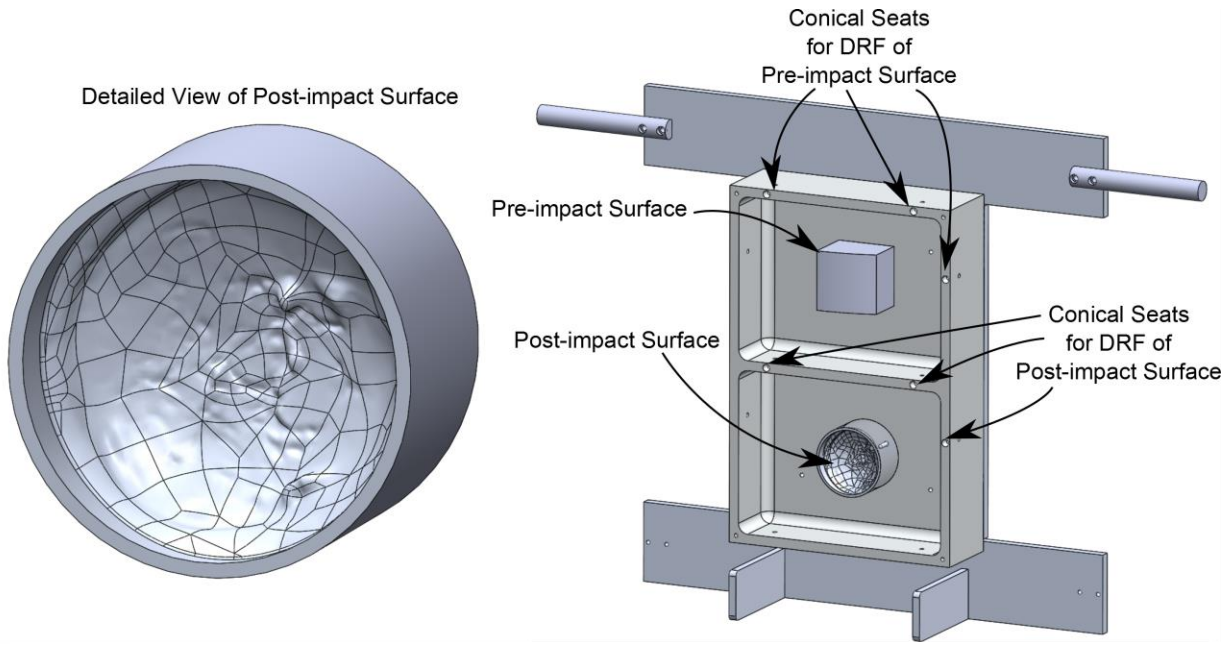

FIGURE 4: (Left) Detailed view of Post-impact surface for Dual Chamber design, (Right) Assembly of pre and post-impact surfaces in dual chamber fixture with respect to DRFs

the largest BFD value and then measure those few locations with a high point density. These artifacts were placed in the CMM such that the surfaces being measured were approximately perpendicular to the *Z* axis of the machine.

The data collected was post-processed by NIST's own mathematical software algorithms, and not the proprietary software used by the Army, allowing an independent check even of the software processing/smoothing algorithms used during actual BFD testing.

CALIBRATION UNCERTAINTY and RESULTS

The data captured by the CMM was post processed using an NIST algorithm designed to yield the value of the maximum distance length measurand [1]. The calibrated BFD values for the two artifacts described in this paper are outlined in *Table 1*. The NIST measurement uncertainty budget for the kinematic design (KD) and the dual chamber (DC) design are shown in Table 2. The expanded uncertainties are 18 % and 27 % of the initial design target uncertainty of 90 µm, respectively.

Table 1: Calibration results for kinematic deign (KD) and dual chamber (DC) BFD artifacts (mm)

	BFD Value	Uncertainty (*k=2*)
Design 1 (KD)	47.704	0.016
Design 2 (DC)	41.240	0.024

Table 2: NIST measurement uncertainty budget

	KD std. unc. (µm)	DC std. unc. (µm)
Local CMM repeatability on pre- & post- impact surfaces	0.3	0.6
Projection of coordinates from stylus center to BFD surface	4.9	4.9
Z-axis systematic errors from calibrated step standards	0.1	0.1
Coordinate system and kinematic reproducibility	4.2	6
Thermal uncertainties:		
Due to Uncertainty in Temperature	< 0.1	< 0.1
Due to Uncertainty in CTE	< 0.1	< 0.1
BFD algorithm accuracy	< 0.1	< 0.1
Loading deformation on BFD	5.1	9.0
Combined standard uncertainty	8.2	12
Expanded uncertainty (*k* = 2)	16	24

ARMY TESTING RESULTS

Initial testing results conducted at the Army's Aberdeen Test Center (ATC) are summarized in Table 3. The measurements consist of 48 BFD values (from eight different technicians) performed both in ATC's laboratory, using equipment and procedures similar to the live-fire test ranges, and on the actual live-fire test ranges. Examination of the estimated errors (each error being the ATC measured value minus the NIST calibrated value) provides insight into the effectiveness of the BFD artifacts

and an initial view of ATC's current measurement capability. Table 3 shows a summary of the results, presented as (1) the 95th percentile of the error distribution and (2) twice the root-mean-square of the estimated errors. The RMS value was computed, as opposed to the standard deviation, because the RMS evaluates deviations from the calibrated value including systematic errors, as opposed to just the deviations from the mean error, which are evaluated in the standard deviation. A complete ATC uncertainty budget would require more measurements spanning a wider range of influence quantities and also combining the NIST calibration uncertainty. Nonetheless the currently available ATC results show excellent agreement with the NIST calibrated values, especially notable in consideration of the high-volume measurement environment of the actual test ranges. The significant improvement in ATC's measurement capability reflects an ongoing effort for continuous metrological improvement of their BFD dimensional measurement capability.

Table 3: Initial ATC test results: 2 RMS and 95th percentile* of (ATC value – NIST value) (mm)

	KD 2*RMS	KD 95th %	DC 2 *RMS	DC 95th %
ATC Lab	0.040	0.047	0.037	0.039
ATC Live Fire Range	0.063	0.060	0.109	0.094

CONCLUSION

Two artifacts satisfying all of the core design requirements have been designed, developed, calibrated, and delivered to the US Army. Feedback from the Army noted that both designs performed well with their LS/AACMM systems. The kinematic design provided more repeatable results when measured in ATC's live fire range, when compared to the dual chamber concept. One likely reason is that the pre and post-impact surfaces share a common DRF. The other is the short metrological loop that is maintained by the kinematic coupling of the pre and post-impact surfaces. However the kinematic design was very sensitive to incomplete seating of the kinematic coupling. If the not properly seated, the kinematic design would produce an incorrect BFD value, something that the dual chamber design wasn't' subjected to since it has no moving parts. . Comparison with an initial set of Army BFD measurements shows excellent agreement with NIST results and significant metrological improvements relative to their initial implementation of the LS/AACMM system.

DISCALIMER

Certain commercial equipment, instruments, or materials are identified in this paper in order to specify the test and measurement procedure adequately. Such identification is not intended to imply recommendation or endorsement by the National Institute of Standards and Technology, nor is it intended to imply that the materials or equipment identified are necessarily the best available for the purpose.

REFERENCES

[1] K. Rice, M. Riley, A. Forster, S. D. Phillips, C. M. Shakarji, D. Sawyer*, et al.*, "Dimensional Metrology Issues of Army Body Armor Testing," National Institute of Standards and Technology, Gaithersburg, MD 2010 (unpublished).

[2] "Department of Defense Test Method Standard For Performance Requirements and Testing of Body Armor," in *MIL-STD-3027*, ed: Department of Defense, 2008.

[3] A. Slocum, *Precision Machine Design*. Dearborn, Michigan: Society of Manufacturing Engineers, 1992.