100 Years of Photometry and Radiometry

J. E. Hardis

Optical Technology Division
National Institute of Standards and Technology
Technology Administration, U.S. Department of Commerce
Gaithersburg, MD 20899–8440

ABSTRACT

Measurement of light is an old subject, though the past 100 years have seen significant advances. 100 years ago, photometry—the art and science of measuring light as it is perceived by people—had the greater technological importance. Even today, SI (the metric system) retains a base unit for photometry, the candela. However, early work at NBS included pivotal projects in the field of radiometry—the measurement of the physical characteristics of light. These included the validation of Planck's newly-minted theory of blackbody radiation, determining the radiation constants with good accuracy, and the definitive analysis of the spectral responsivity of human vision, so as to relate photometry to radiometry. This latter work has only increased in importance over the past 75 years as the definition of the candela has changed and improved. Today, NIST makes radiometric, and hence photometric measurements, with unprecedented precision. Cryogenic radiometers based on the principle of electrical substitution measure optical flux with uncertainties of 0.02 %. Additional facilities enable measurement of spectral responsivity, spectral radiance, and spectral irradiance. Novel detectors, such as light-traps, allow the best accuracy to be transferred from the primary standards to routinely-used instruments and to calibration customers. Filtered detectors are used to realize photometric scales, radiation temperature scales, and other, specialized measurements. Indeed, the story of the metrology of light is the story of continuous improvement, both driven by and enabled by advances in technology. We touch upon some of these as a prelude to the other talks in this Conference.

Keywords: photometry, radiometry, blackbody radiation, candela, NIST history

1. INTRODUCTION

At NIST, we are celebrating the centennial anniversary of NIST's founding 100 years ago, in March 1901. This gives us the occasion to look back at historical material on what the early years of NIST—then, the National Bureau of Standards (NBS)—were like. Here, we discuss some of the major milestones in photometry and radiometry, and how they relate to similar capabilities today. Needless to say, this account is necessarily abbreviated and selective, and only a fraction of the story that is documented in the References.

2. THE FOUNDING OF THE NATIONAL BUREAU OF STANDARDS

The formation of the National Bureau of Standards was largely to the credit of Samuel Wesley Stratton, who later became our first Director.[1] The U.S. Constitution—and the Articles of Confederation before it—gave the Federal government the right and power to fix the standards of weights and measures throughout the United States. At first, this duty was borne by the Treasury Department. Treasury, of course, was responsible for levying the duties and customs taxes on imports and exports, and the goods had to be measured properly in order to collect the correct amount of tax.

However, at the end of the 19th century, the needs of the Nation were changing. We were becoming more and more an industrialized nation, and less of an agrarian one. In the three years preceding 1900, the value of American manufactured goods sold abroad almost tripled. The 1890s saw the birth of the Ford Motor Company, and by 1900 at least 80 companies were making gasoline, electric, and steam automobiles. Electricity was still somewhat of a novelty. Gas

lighting was still more prevalent than electric lighting, but cities like Boston and New York were electrifying their subways and transit systems, and electricity was being adopted for domestic uses too.

Fig. 1. Samuel Wesley Stratton, the architect and first Director of the National Bureau of Standards.

These and the other great wonders of the age, like the telephone, were all technologies based on new science. And it was becoming increasing clear that the little Office of Weights and Measures within the Treasury Department needed an overhaul. In Europe, and particularly in Germany, government-run laboratories kept at the forefront of science to provide the best possible standards and the best possible measuring instruments for their nation's industries.

However, in the United States there was nothing of the kind. Congress heard testimony from the likes of Prof. Henry Rowland of the Johns Hopkins University—a name familiar from spectroscopy—that lamp companies in the U.S. had simply agreed to call a certain kind of lamp a 2000 candlepower lamp, when in reality, by British or German standards, it amounted to only 400 or 500 candlepower. Not only did the U.S. lack photometric standards, we did not have measurement standards for temperature, or pressure, or navigation instruments, or anything electrical.

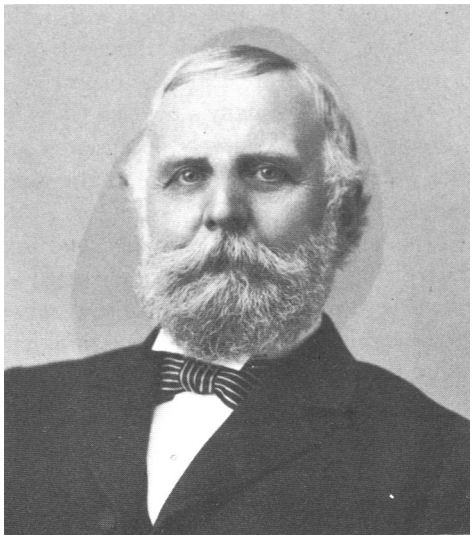

Fig. 2. Secretary of the Treasury Lyman J. Gage

In the late summer of 1899, Secretary of the Treasury Lyman Gage decided to see what could be done. Gage was a solid, conservative Chicago banker who was well respected by Congress. It turned out that Gage's private secretary had a college classmate and friend who had become a physicist. This was, of course, Stratton—who at the time was a 38-year-old Professor of Physics at the University of Chicago.

Stratton came to Washington and helped to draft the bill establishing a new U.S. national standards laboratory. Stratton did much of the background staff work, such as organizing the arguments for the Congressional hearings, but the initiative was taken by Secretary Gage. There were several key arguments—such as keeping pace with international competition—but in the end in came down to science. Stratton's vision was a laboratory that would be "fitted for undertaking the most refined measurements known to modern science." He saw the important connections between commercial measurements and those of institutions of learning, technical institutions, and scientific societies—all of them tied together as part of the enterprise that was fueling the economic growth of the United States.

As the saying goes, you have to be careful about what you wish for—because you might get it. On March 3, 1901, Congress passed the legislation creating the National Bureau of Standards, and Stratton was offered the job of running it. His Department Chairman back at Chicago—A. A. Michelson—was difficult to get along with, so he took on the challenge.

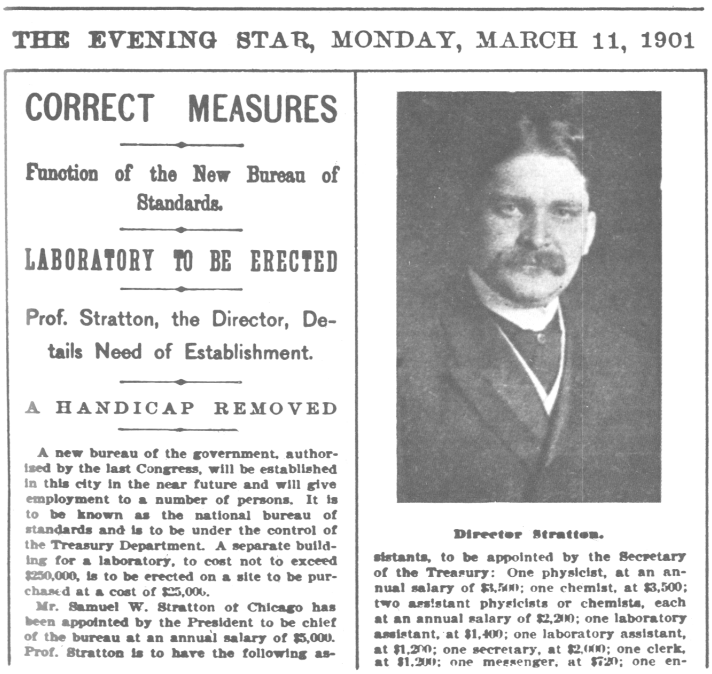

THE EVENING STAR, MONDAY, MARCH 11, 1901

CORRECT MEASURES

Function of the New Bureau of Standards.

LABORATORY TO BE ERECTED

Prof. Stratton, the Director, Details Need of Establishment.

A HANDICAP REMOVED

A new bureau of the government, authorized by the last Congress, will be established in this city in the near future and will give employment to a number of persons. It is to be known as the national bureau of standards and is to be under the control of the Treasury Department. A separate building for a laboratory, to cost not to exceed $250,000, is to be erected on a site to be purchased at a cost of $25,000.

Mr. Samuel W. Stratton of Chicago has been appointed by the President to be chief of the bureau at an annual salary of $5,000. Prof. Stratton is to have the following assistants, to be appointed by the Secretary of the Treasury: One physicist, at an annual salary of $3,500; one chemist, at $3,500; two assistant physicists or chemists, each at an annual salary of $2,200; one laboratory assistant, at $1,400; one laboratory assistant, at $1,200; one secretary, at $2,000; one clerk, at $1,200; one messenger, at $720; one en-

Director Stratton.

Fig. 3. Clipping from Washington, D.C. newspaper reporting the founding of NBS. Note that Dr. Stratton was allowed to hire one physicist and one chemist, each at salaries of $3500, plus additional help.

His first job was to build new facilities, and to build a staff. He himself was to receive a salary of $5000, about half of what a corporate executive of the day would get. The positions and remuneration of staff were carefully prescribed by the Congress, and a budget was provided for a new laboratory.

3. WILLIAM WEBER COBLENTZ

Fortunately for our story today, one of Stratton's recruits was William W. Coblentz, who came to work at NBS in 1905 as a Laboratory Assistant—actually, the personal assistant to Stratton in his laboratory.[2] Coblentz had been a graduate student in physics at Cornell University, where he did pioneering work in infrared spectroscopy. It was Coblentz who

had first showed the relationship between the infrared spectrum of a molecule and its chemical structure. This began a whole field in analytical chemistry, for which he is honored to this day by the Coblentz Society.[3]

Fig. 4. William W. Coblentz.

Coblentz's first job at NBS was to keep Stratton's interferometers in working order so they could be shown to the important dignitaries that came through on tours. But pretty soon, Stratton caught on to the value of infrared spectroscopy, and he ordered Coblentz to build up a new laboratory with spectrometers and radiometers.

There was something else that Stratton picked up on, which forms the turning point of our story. Among Stratton's other duties were 'keeping up with the Joneses.' He would visit the more established European laboratories and then he would come back and set new directions for NBS. One of the things he learned about in Europe grabbed his attention.

3.1 Blackbody Radiation

One of the great mysteries in physics at end of the 19th century was the origin of blackbody radiation. When objects are hot, they give off light. By "blackbody," we mean that the object does not reflect ambient light—all the light we see from it is thermally generated. This light is an intrinsic function of the object's temperature. The fact that there was thermal radiation was well known, and its spectrum was fairly well known. But classical mechanics was also well known and highly trusted, and it did not give the right predictions.

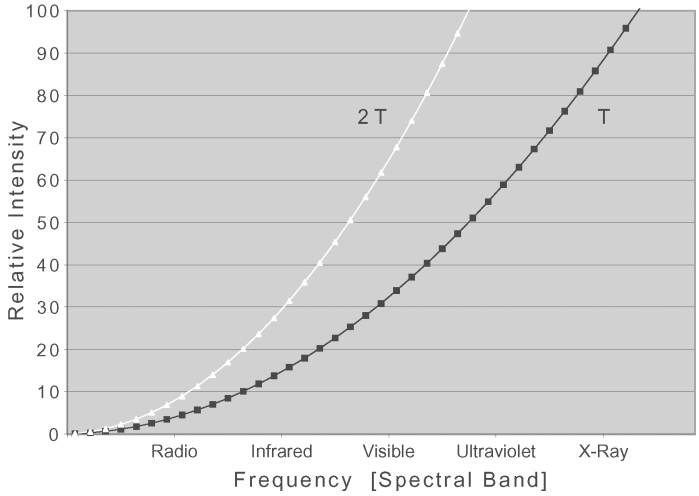

Fig. 5. Prediction of the Rayleigh-Jeans equation of blackbody radiation, for radiators at temperatures T (black curve) and 2 T (white curve). (Artistic license taken, following Ref. [4].)

There is a famous equation that is attributed to British physicists Lord Rayleigh and Sir James Jeans that expresses the intensity of blackbody radiation in terms of its frequency components, as shown in Fig. 5. The intensity goes linearly with temperature, and as the square of the frequency. Even though they applied the theory and did the math exactly right, this result was patently untrue. People did not get sunburned sitting next to candles, and dentists did not use incandescent lamps as x-ray sources. Nevertheless, the theory predicted a curve that looked like the supposed valuation of an Internet stock, which was pretty hard to believe.

The functional form of an actual blackbody radiator (and Internet stock) is shown in Fig. 6. This is what scientists knew blackbody radiation to look like—more-or-less—at the end of the 19th century. But as with Internet stocks at the end of the 20th century, there was no good theory to explain this behavior.

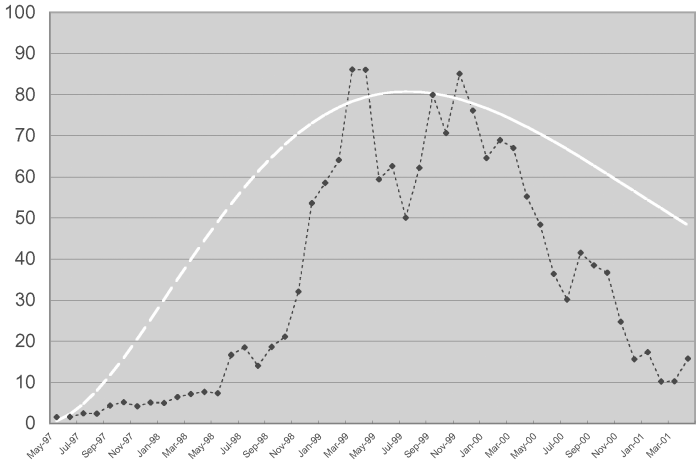

Fig. 6. Comparison of functional forms of blackbody radiation (white curve; relative intensity as a function of frequency) and the stock price of a well-known Internet company (black curve; dollars as a function of time).

However, at the turn of the century, German physicist Max Planck seemed to have an answer. In 1900, Planck published his now-famous formula. Scholars and historians have argued for a long time about what exactly Planck knew, and when he knew it. But out of the discussion among physicists that followed its publication, it became clear within a couple of years that what Planck was really saying was that light was quantized. Today, we speak of light as consisting of individual photons. For this discovery, Planck ultimately won the Nobel Prize in Physics in 1918. However, at the dawn of the 20th century, the idea was a bit hard to swallow.

Fig. 7. Max Planck. (From Ref. [5].)

Fortunately, Planck's theory was testable. His formula had within it two constants—today called the first and second radiation constants—that were products of fundamental constants like the speed of light, and π, and something new which became known as Planck's constant. What the European laboratories were trying to do, and what Stratton came back and told Coblentz to do, was to nail down the precise spectrum of a blackbody and to determine the experimental values of the two radiation constants.

Figure 8 shows his results, from 1911, as published in 1916.[6] It is hard to see the difference between his data points and the theoretical curve for a 1323 °C (1596 K) blackbody—and that's the point. Coblentz got the spectrum right, in absolute measure.

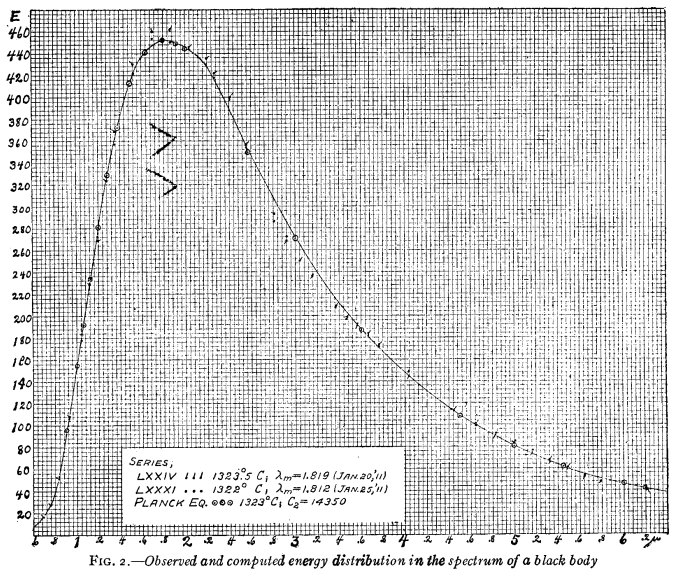

Fig. 8. "Observed and computed energy distribution in the spectrum of a black body." (From Ref. [6].)

Comparing Coblentz's published results from 1916 with the best data we have today, we see that he is off by only tenth's of a percent. His calculation of Planck's constant, h, is off by less than 1 %, and that is because the other fundamental constants used in the calculation were not as well known in 1916.

Constant	1916 (Coblentz)	Today (CODATA 1998)
C_2	14369 μm K	14388 μm K
C_3	2890 μm K	2898 μm K
h	6.565 $\times 10^{-34}$ J s	6.626 $\times 10^{-34}$ J s

Table 1. Blackbody radiation constants. (Data from Refs. [6] & [7].)

If you are not impressed yet, you will be as we continue and you see what Coblentz had to work with. Indeed, there was no one better suited for this task than Coblentz. He began the practice of radiometric metrology at NBS with an unrivaled skill in making the detectors necessary to detect and measure the infrared radiation. One of his chief interests at NBS was to continually improve upon, and compare the performance of, the different types of radiation detectors that were known at the time. This is where his expertise really shone.

3.2 Optical Radiation Detectors

When different metals are welded together, a small temperature-dependant voltage difference develops between them. A thermopile is a series of these junctions, wiring back and forth between different metals to build up higher voltage. The odd numbered junctions—from metal A to metal B—are all held at one temperature, and the even numbered junctions—from metal B back to metal A—are all held at some other temperature. In practice, the odd numbered junctions are connected to a light receiver, which heats them, and the even numbered junctions are kept at a constant reference temperature.

Coblentz became an expert in how to solder and weld unusual metals, such as bismuth, and how to build the most useful light receivers out of the thermocouple junctions. He used metal blacks and even candle soot to coat the light-receiving surfaces. Figures 9 and 10 show examples of his work. The geometries would vary, depending on the problem at hand. Nevertheless, you can recognize the central sections, where the optical heating occurred, and the alternate set of junctions, which were kept cooler. The example on the far right of Fig. 10 was designed to fit on the exit slit of a monochromator. He could slide the detector up, away from the monochromator, for dark-current readings.

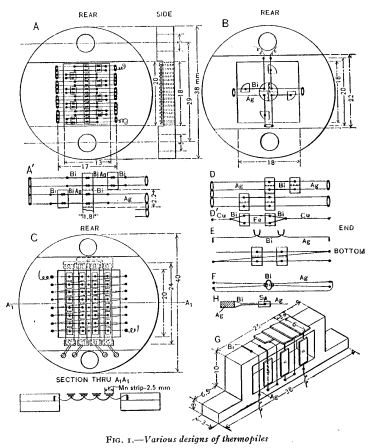

Fig. 9. "Various designs of thermopiles." (From Ref. [8].)

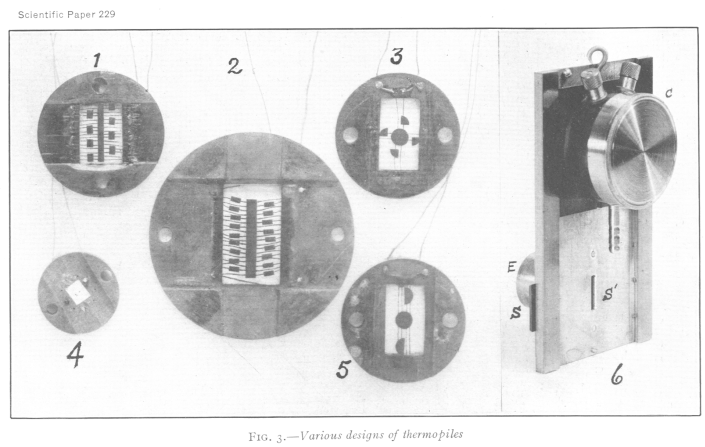

Fig. 10. "Various designs of thermopiles." (From Ref. [8].)

One of the key tricks that made all of this work was the principle of electrical substitution. Coblentz did not invent the idea—it was independently developed in the 1890s by Kurlbaum and Ångstrom[9]—but he employed it very well.

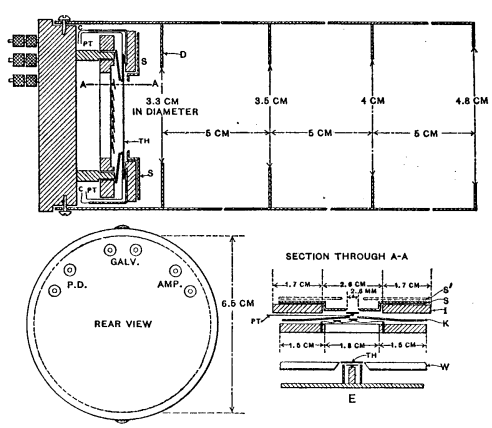

Fig. 11. "Thermopile for absolute measurements of radiation." (From Ref. [8].)

Light made the temperature of the thermopile rise, but how did that relate to the actual power of the light, in watts? To answer that question, Coblentz made provision for an electrical heater on the receiver as well. He could measure the amount of electrical power that caused the same temperature rise as the light did, and through the principle of equivalence, deduce the power of the light. This allowed measurement of the power of light in absolute terms.

In Fig. 11 we see one of his detectors with connections for a galvanometer, which measured the voltage produced by the thermopile, an electric current (Amp), which powered the heater, and a voltmeter (P.D.), to measure the potential difference across the heater to determine the electrical power (I times V) being applied. The detector was carefully packaged and shielded for its intended application.

Coblentz was an expert in more than just thermopiles. Figure 12 shows one of his bolometers. A bolometer is a thin-film device that changes electrical resistance with temperature. Here, he has mounted one in a vacuum enclosure (so that convection currents would not cool the device) with an entrance window and a hemispherical reflector. The reflector returns light that reflects off of the bolometer back upon it, to improve signal-to-noise.

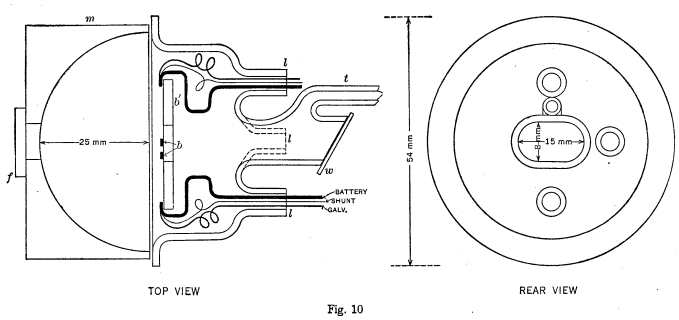

Fig. 12. A bolometer.
(From Ref. [10].)

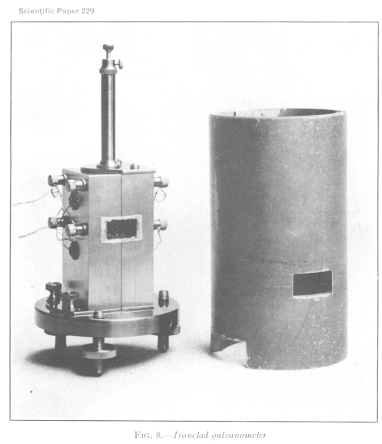

Fig. 13. "Ironclad galvanometer."
(From Ref. [8].)

Recall that this work was being carried out in the 1910s. De Forest did not invent the triode tube until 1906, and even into the 1910s, the use of electronic amplification should not be presumed. For this work, Coblentz also had to develop the galvanometer technology to measure the minute voltages from the thermopiles. A galvanometer is vaguely like a traditional electrical multimeter, only instead of a turning needle there is a turning mirror. An example is shown in Fig. 13. Behind the window, there is a light-weight mirror with a coil of wire attached. These are embedded in the strongest possible magnets and delicately suspended by a glass or quartz fiber. When a minute current flows through the coil, the mirror tilts slightly. Some ways away, one views the mirror through a telescope with a reticle on it to measure the slightest deflection. In this design, Coblentz also built a magnetic shield, out of iron, to cut out interference.

Finally, it is interesting to view Coblentz's laboratory as a whole. Figure 14 shows what the laboratory looked like, though admittedly they rearranged things to make a better picture. There were spectrographs, and thermopiles, and all the other trappings that were necessary. But take another look at the room itself—parquet floors, a ceiling border, window treatments, and chair moldings. They don't make laboratories like they used to.

3.3 The Visibility Curve

There was another interesting problem in those early years that caught the attention of Coblentz and others at the Bureau. It has been understood since the time of Isaac Newton that white light is a combination of a rainbow of different wavelengths, seen as pure colors. Light is a form of radiant energy, with a power that can be measured in watts, but the connection between this physical description and the visual result at different wavelengths was not known.

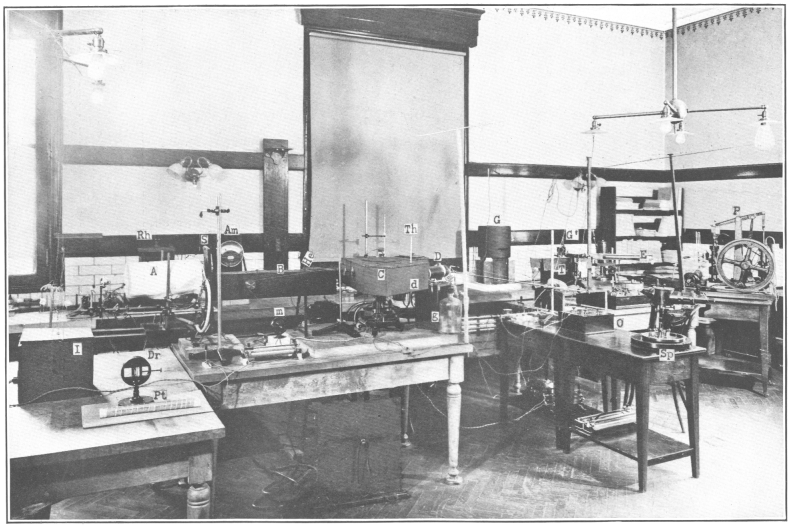

Fig. 5.—*Radiometric laboratory.*

Fig. 14. "Radiometric laboratory." (From Ref. [11].)

The first experiments to quantify how well the human eye responds to radiant power were undertaken by Fraunhofer in 1817.[12] The first energy measurements were made by Langley in 1883. By 1905, Goldhammer had crystallized the idea of there being a definite relationship between visibility of light and its power at each wavelength. At the young NBS, Nutting introduced the term "visibility curve" in 1908.[13] But what was this curve? What was the relationship between the physics of light and the visibility of light? Finding the answer was one of the earliest challenges and biggest successes of NBS.

In 1917, Coblentz and W. B. Emerson, another NBS researcher, built the instrument shown in Fig. 15 in an attempt to find the answer.[14] They used the "flicker" method—a rotating, slotted mirror let an observer look at two lights of different color in rapid alternation. The brightnesses of the lights were adjusted until the flickering appeared to stop, that is, when the lights appeared equally bright.

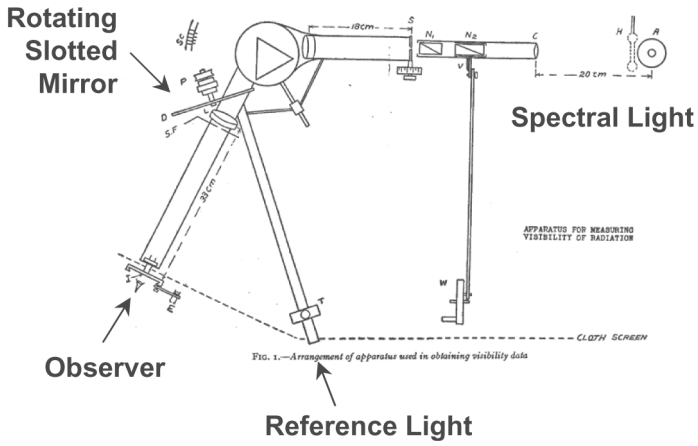

Fig. 15. Experiment of Coblentz and Emerson to determine visibility of light. (From Ref. [14].)

Nevertheless, these and other data accumulated around the world were not consistent. While other researchers used the flicker method too, some used a split-screen viewing method instead. Their differences seemed irreconcilable.

4. THE GIBSON/TYNDALL EXPERIMENT

Seeing the need to bring closure to the question of the visibility curve, Dr. Edward Hyde (who had left the NBS staff in 1908 to go to the General Electric Nela Research Laboratories), as president of the U. S. National Committee of the International Commission on Illumination (the CIE), requested the Bureau of Standards to make an additional investigation using the so-called "step-by-step" method. This form of split-screen matching, where comparisons were made between a series of only slightly different colors, held promise as a means of obtaining more reliable data.[15]

NBS undertook the challenge under the generous sponsorship of General Electric. Director Burgess appointed a special committee of experts to oversee the work, which was conducted by Kasson Gibson and Edward Tyndall. Equipment was borrowed from the University of Nebraska, to be incorporated into an elaborate apparatus that made the best use of the Bureau's primary standard lamps. Special care was taken in all aspects of the experiment—issues that were believed to affect the consistency between previous experiments received particular attention.

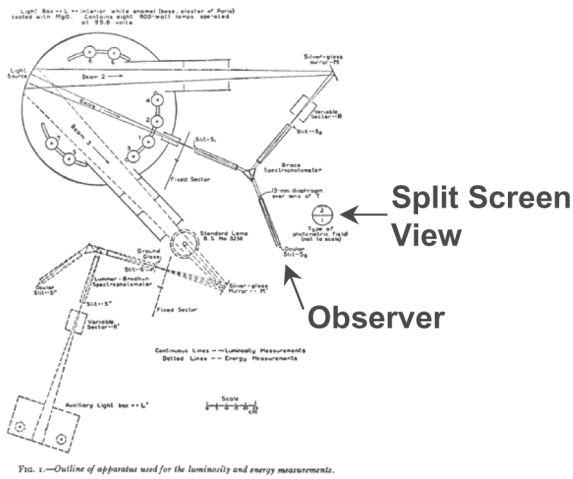

Fig. 16. Experiment of Gibson and Tyndall to determine visibility of light. (From Ref. [15].)

As hoped, the new data were within the range of data obtained with flicker methods, while having the precision expected of split-screen matching methods. However, Gibson and Tyndall prevailed not so much because of their new experimental results as they did in their extensive analysis and critical review of all existing data. Gibson and Tyndall thoroughly compared their own results with those of their predecessors around the world, and proposed a mean visibility curve based upon the accumulated data from more than 200 different observers. They were guided in this task by the prevailing theories of the day, which were believed to dictate certain balance in the curve.[16]

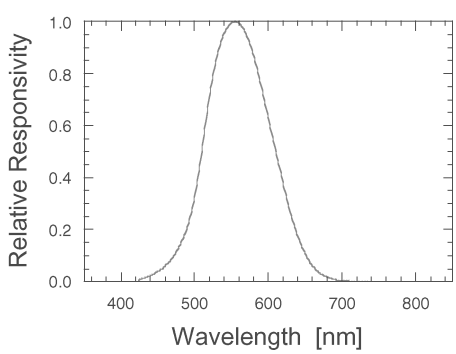

Fig. 17. The visibility curve [$V(\lambda)$]

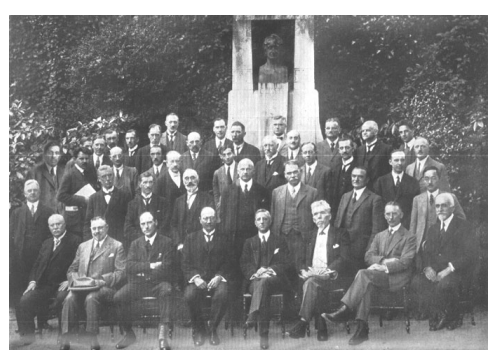

Fig. 18. Participants at the 6th Session of the CIE, 1924. (From Ref. [17], which also identifies the individuals.)

Their result was published in 1923, and it was a smash success, quickly winning wide acclaim. In 1924, the 6th Session of the CIE adopted the Gibson-Tyndall curve as a world standard.[17] In 1933, the Comité International des Poids et Mesures (the supervisory body of the world's metric system) followed suit.[18]

5. THE PLATINUM-POINT BLACKBODY

The achievement of Gibson and Tyndall might have remained an academic one were it not for the advances of technology and the changing needs in metrology. As surprising as it might seem today, until 1948 there was no unique international standard for the brightness of light. Some nations used gas lamps as standards, some used liquid-fueled lamps, and following the trend towards electric lighting at the turn of the century, some (including NBS) used electric lamps.[19] It was difficult to compare lighting devices to the standards, and the standards to each other, because different fuels and different lamp constructions would produce lights of different color. There were no instruments that could make these comparisons—they required visual judgments from people, and people could not consistently compare the brightnesses of differently colored lights.

In 1948, this changed when the world adopted the platinum-point blackbody as the sole international standard for the luminous intensity of a light source.[20,21] (Luminous intensity is a geometrically precise term that loosely speaking means the brightness of a light.) As discussed in Sec. 3.1, the light from a blackbody is an intrinsic function of its temperature. The trick was to operate a blackbody at a temperature that anyone could replicate—in this case, the temperature of molten platinum as it begins to freeze while cooling. Since 1948, luminous intensity has been a formal part of the world's system of metric measurement, which has been called Système International (SI) since 1960.

This achievement in 1948 was a long time in coming. In fact, it was first proposed by C. W. Waidner and G. K. Burgess at NBS in 1908, 40 years earlier.[22] The idea derived from the Violle standard, which was introduced in 1881. The Violle standard was blackbody radiation from the actual surface of platinum at its freezing point. However, as platinum freezes, its emissivity changes. It is also easily contaminated. As a result—to quote from their paper—"The Violle unit has never been consistently reproduced by any observer other than Violle." There had been previous proposals to use blackbodies as absolute light standards, but Waidner and Burgess were the first to combine a blackbody standard with freezing platinum as a temperature control. International work to develop and to reach consensus on a platinum-point blackbody standard reached its peak in the 1930s, but World War II delayed its implementation until 1948. In 1967, using more modern terminology, the following was adopted[20,21]:

> The candela is the luminous intensity, in the perpendicular direction, of a surface of 1/600000 square meter of a blackbody at the temperature of freezing platinum under a pressure of 101325 newtons per square meter.

The magnitude of the unit of luminous intensity (renamed the candela after 1948) was set by the specification 1/600,000 square meter, which was chosen to make the candela about the same brightness as traditional standard candles.

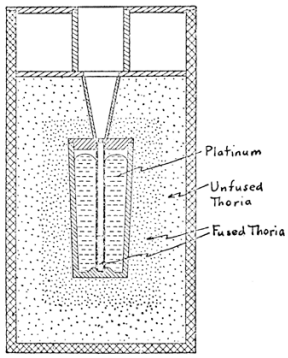

FIGURE 1.—*Cross section showing the platinum crucible and insulation*

Fig. 19. The platinum-point blackbody standard of the luminous intensity of light. (From Ref. [23].)

The goal of the 1948 standard was to provide better world-wide stability and uniformity of measurements.[24] However, its development had an unintended consequence. Unlike the previous lamp and flame standards, the behavior of blackbodies are known from basic physics (Planck's equation of radiation). This light source was described by theory. The other piece of the puzzle was how the eye responded to this light, and this is where the standard from Gibson and Tyndall fit in. Suddenly, there was a mathematical model of the entire process of vision.

Since 1948, it has no longer been necessary to use human judgment in the comparison of lights ("visual photometry"). While the Gibson and Tyndall model does not completely capture the intricacies of human vision, it does provide an unambiguous algorithm for evaluating light intensity through physical measurement ("physical photometry").

6. THE MODERN CANDELA

As time went on, the platinum-point standard turned out to be a real pain. While the idea of luminous intensity was to compare dissimilar lights in universal way, the platinum-point blackbody developed a reputation of being too dissimilar from the light sources people actually wanted to measure. Electric lamps operated at much hotter temperatures, for example. Also, operating and maintaining the blackbodies turned out to be a chore. Contaminants would dissolve in the platinum and change its freezing point. And what exactly was that freezing-point temperature, anyway? You could not calculate the emission spectrum well unless you knew the temperature well.

Finally, in 1974, Bill Blevin from NML in Australia and Bruce Steiner from NBS published the seminal paper that said, 'enough is enough.' They formally proposed that the SI base unit for photometry be redefined so as to provide an exact numerical relationship between it and the SI unit of power, the watt.[24] They stated the case so well, that, in 1979, the world adopted this proposal.[20,21] From then until now, 22 years later:

> The candela is the luminous intensity, in a given direction, of a source that emits monochromatic radiation of frequency 540×10^{12} hertz and that has a radiant intensity in that direction of 1/683 watts per steradian.

The frequency of 540 THz corresponds to the 555 nm peak of the Gibson and Tyndall visibility curve, which is in the green portion of the spectrum. The number 683 corresponds to the best knowledge in 1979 of what the freezing-point temperature of platinum is, in order to make the transition between the definitions as seamless as possible.

Within SI, luminous intensity holds a special status: the candela is the only base unit of measurement that is anthropocentric. "Light" is literally that which can be seen, and its unit of photometric measurement is meant to indicate how well it can be seen. On one hand, this definition of the unit still implies the supremacy of human observation in its application. On the other hand, even though this definition retained the form of its predecessor, no one seriously contemplates putting a monochromatic green source at one end of a photometric bench for use as a visual standard. The era of visual photometry has ended. Today, essentially all photometry is physical photometry, relying upon this definition and the visibility curve $V(\lambda)$ (now called the "spectral luminous efficiency function for photopic vision") to characterize any real light source.[25]

100 years ago, photometry—the art and science of measuring light as it is perceived by people—had the greater technological importance. Gas lighting was prevalent, and electrical lighting was competing for market share. As electric lamps improved, photometry has been important for judging one lamp against another. The field of radiometry—the measurement of the physical characteristics of light—developed along a separate path at first. However, as we have seen, physical photometry became more and more acceptable down through the century, until 1979, when it became indispensable. It certainly will remain so into the future, as scientific instruments have far exceeded human abilities in precision and consistency. Nevertheless, one should not lose sight of the purpose of photometry, which transcends historical models.

7. CRYOGENIC RADIOMETRY

Photometry nowadays begins with the best possible measurements of optical power, in watts, and as in the days of Coblentz, the preferred technique is electrical substitution. However, there are many potential sources of experimental

error when using electrical substitution. When done at room temperature in air, there can be convective cooling and radiative effects. The heat capacities and thermal resistivities (conductivities) of the detector components can contribute to unwanted thermal gradients that can cause detection non-equivalences between the optical heating process and the electrical heating process. As is well-known today, to minimize these sources of error it is advantageous to make such measurements at extremely cold temperatures, in vacuum, in what are commonly called "cryogenic radiometers."[26]

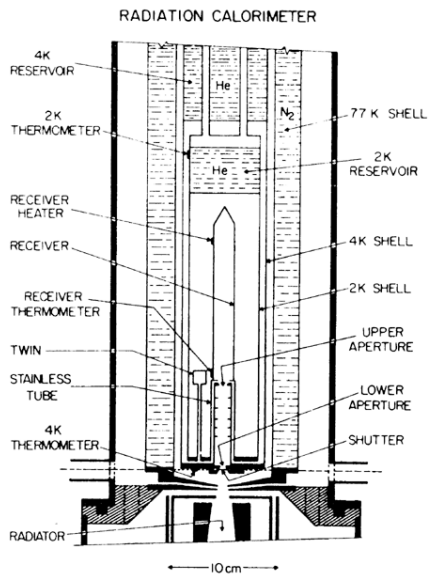

Fig. 20. The first cryogenic radiometer. (From Ref. [27].)

Defoe Ginnings and Martin Reilly built the first cryogenic radiometer, at NBS, in 1972.[27] Figure 20 illustrates its major components. Like its later counterparts, it has a liquid-helium-cooled receiver, and a liquid-nitrogen-cooled shield. However, this design did not live up to expectations. It was improved upon by Terry Quinn and John Martin at NPL in the UK, which led to their famous determination of the Stefan-Boltzmann constant in 1985.[28] NPL staff later developed this device into a radiometer for laser power measurements and thereby provided a technique to establish high accuracy calibrations of other stable detectors by comparison to the cryogenic radiometer.[29]

Today, cryogenic radiometry is often the primary standard, worldwide, for national laboratories that maintain optical power scales.

8. TRAP DETECTORS

Another element that is essential today is the ability to transfer the information from a cryogenic radiometer calibration to another laboratory (such as a photometry laboratory) or to a calibration customer. One of the essential tools for that is the so-called "trap detector," which was invented at NBS in 1983 by Ed Zalewski and Richard Duda.[30]

A trap detector consists of a series of silicon photodiodes arranged such that light reflected off of one arrives at the next one in a chain. In this way, the detector can absorb much more light—approaching 100 %—than would a single photodiode alone. Trap detectors are useful not only for their high, predictable quantum efficiency, but also because they are more spatially uniform than single photodiodes.

These tools—the cryogenic radiometer and the trap detector—are indispensable today in the practice of "detector-based radiometry."[31] Today, we can make reliable measurements with relative uncertainties of tenth's or hundredth's of a percent, which would have been unimaginable only a few decades ago.

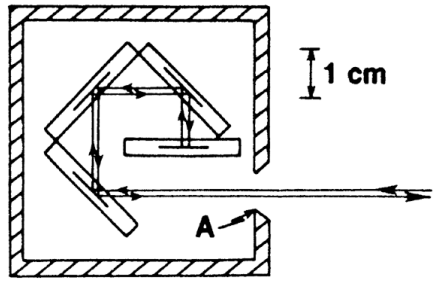

Fig. 1. Optical configuration of the four photodiodes (top). The reflected light beam is shown displaced from the incident beam for clarity of illustration.

Fig. 21. The first trap detector. (From Ref. [30].)

9. EPILOGUE

Before concluding, a few additional words are in order on what happened in some of these stories in later years.

Dr. Stratton remained the Director of NBS for 22 years, until he left in 1922 to become the President of MIT. (A second, unrelated Dr. Stratton became President of MIT in 1957.) He served MIT, as President and later the first Chairman of the MIT Corporation, until his death in 1931.

Among the other scientists who got caught up in Planck fever was Albert Einstein. He took the theory one step further and explained the photoelectric effect in terms of Planck's constant. For this—and not for relativity—Einstein won the Nobel Prize in Physics in 1921. Indeed, the broader meaning of quantum mechanics unfolded during the 1920s. The blackbody radiation experiments proved to be only the beginning of the revolution in physics in the 20th century.

By the way, NIST today still has one of the world's best experiments to determine Planck's constant. In Electricity Division, there is a research project underway to replace the standard kilogram—the last of the SI base units maintained on an artifact—with an electronic version of the kilogram. Planck's constant plays a role in the quantum Hall effect, which is used to realize the ohm. The ohm is a necessary unit of measure when equating electromagnetic force to mechanical force. It follows that, as a side effect of this project, you can determine Planck's constant to high accuracy.[32]

Coblentz remained active in his research—and somewhat of a local celebrity—long after his official retirement in 1944. He was the founder and then Chief of the Radiometry Section during his whole career at NBS, during which time he wrote almost 400 scientific papers. He passed away in 1962.

Gibson and Tyndall could hardly have imagined in 1923 that, over 75 years later, their work would be an integral part of virtually all photometric measurements of light. Over the years, the international experts in the CIE have tweaked the function slightly, but they decided against changing the basic form of the curve even as vision research improved.[16, 33] Gibson headed the work on photometry and colorimetry at NBS from 1933 until his retirement in 1955, publishing over 100 papers in spite of his administrative responsibilities. He served as President of the Optical Society of America from 1939 to 1941 and was a Fellow of the American Physical Society, Illuminating Engineering Society, and American Association for the Advancement of Science. He died in 1979 at the age of 89. Tyndall worked at NBS from 1917 until 1919, and later returned for shorter stays as a visiting researcher. He spent most of his career as Professor of Physics at the University of Iowa, where he did important research on the optical and electrical properties of metals. He distinguished himself as a teacher and supervised 74 masters and doctoral students. He also died in 1979, at the age of 86.

At NIST today, cryogenic radiometry is the foundation for most measurements of optical power. The NIST High-Accuracy Cryogenic Radiometer (HACR) is shown in Fig. 22 and described in detail in the technical literature.[26] This instrument achieves a measurement of optical power to within a 0.021 % relative combined standard uncertainty for

optical powers on the order of 1 mW. A second-generation HACR is under construction. From this instrument, a number of radiometric scales, such as the spectral responsivity scale and the luminous intensity scale, are derived. Additional, specialized cryogenic radiometers are used within infrared and ultraviolet facilities to provide extended accuracy and sensitivity.

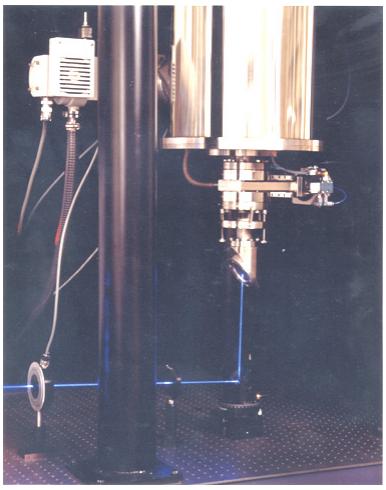

Fig. 22. The NIST High-Accuracy Cryogenic Radiometer (HACR).

The NIST luminous intensity scale today derives from the HACR and is realized on a set of filtered detectors.[34,35] The filters are carefully designed so that the detectors on the whole closely replicate the $V(\lambda)$ curve. (Correction is made to account for the slight differences.) The current realization of the NIST candela has a relative expanded uncertainty of 0.41 % (coverage factor k=2).

Blackbody radiation still plays an essential role in thermometry. (Radiation thermometry is also known as pyrometry.) Here, too, well-calibrated filtered radiometers play a contemporary role. In 1990 at NIST, Klaus Mielenz et al. determined the freezing-point temperature of gold to be 1337.33 K with an expanded relative uncertainty of 0.34 K (coverage factor k=3) using a filtered radiometer.[36] This achievement provided the impetus at NIST to decouple the spectral radiance and irradiance scales from any particular temperature scale (e.g., IPTS-68 or ITS-90) that might predefine the metal freezing-point temperatures. Instead, blackbody temperatures began to be measured *ab initio* using filtered radiometers traceable to absolute detectors (electrical-substitution devices).[37–39]. In this way, the NIST spectral radiance and irradiance scales today are also derived from the HACR.

10. FUTURE TRENDS

The world today is different in many ways from 1923. The world of Gibson and Tyndall did not include the narrow-band lights so common today: LEDs, phosphor-based fluorescent lamps (and CRTs), and certain high-efficiency lamps that are found outdoors and in large facilities. The premise of a century ago that there is a simple visibility curve may no longer be enough. The human visual system is more complex than the simple model suggests—our vision responds nonlinearly to combinations of narrow-band lights, and perceived brightnesses can differ markedly from the model. In a sense, it is the same problem that was recognized in the 1920s as the limitation of equality-of-brightness matching. The data told a story that was not understood then, nor of much technological importance. Today, vision researchers around the world are revisiting the issue in an attempt to improve upon the standard model.

This is a challenge that faces us today as we undergo a revolution in lighting technology. Lighting accounts for nearly one-sixth of the electricity used in the United States—$40 billion annually. Advances in lighting, particularly the use of high-efficiency lighting sources, have the potential to reduce U.S. electricity bills by billions of dollars annually, conserve energy, and reduce power-plant emissions. With stakes so high, industry and government have set out their goals in a roadmap for the future: Vision 2020.[40] Industry is responding, with new technologies in place and under

development. However, it is a continuing challenge for industry and its partners—vision researchers, standardizing bodies, and government—to not only develop better lighting technologies (such as LED and other solid-state sources), but also to evaluate them with modern standards and fair metrics.

The message is clear: while photometry is an old subject, it is still a vital one.

More broadly, just as electronics laid the foundation for great technologies of the 20th century, so optics holds the key for the great technologies yet to come. World leadership in communications, computation, medicine, energy, defense, and manufacturing will all rely on optical science and technology.[41]

Into our next century, NIST will continue to work with U.S. industry, the standards community, and others, to help keep the United States at the cutting edge with the photometric and radiometric measurement standards that are needed.

ACKNOWLEDGEMENTS

We, the NIST staff of today, take the occasion of our centennial to remind ourselves (in the words of Issac Newton) that we stand on the shoulders of giants. In addition to those named in the course of this report, we give thanks to their co-workers and colleagues, who in no less measure provided the stimulating environment for continuity and progress in photometry and radiometry for almost 100 years.

Many people have expended much effort over the past couple of years to frame the window to our past. Special mention is due for Albert Parr, Chief of the NIST Optical Technology Division, who's personal interest interests in science and history provided much of the motivation for this report, particularly the section on Coblentz. He is also the author of a companion article in the Centennial Issue of the Journal of Research of NIST which provides a snapshot of today's capabilities in more technical detail.[42] Barry Taylor deserves much credit for this memorable issue of the Journal.[43] Another catalyst for this report was the Herculean effort by David Lide to compile a sampling of the most significant NBS/NIST publications of the first 100 years.[44] While we were able to acknowledge within it the important work of Coblentz, Gibson, and Tyndall, the SPIE has been very supportive of the formation of this Conference to allow us to expand upon the contributions of others in their fields of interest. Special thanks go to Janice Gaines Walker, Marilyn Gorsuch, Terry Montonye, Alex Pulchart, and Andrew Edelman of SPIE for all of their help, and for Carmiña Londoño for being the driving force behind the Conference.

REFERENCES

1. Much in this Section draws from: R. C. Cochrane, *Measures for Progress, A History of the National Bureau of Standards*, U.S. Government Printing Office (1966).
2. Much in this Section draws from: W. W. Coblentz, *From the Life of a Researcher*, Philosophical Library, New York (1951). Additional detail on Coblentz may be found in the clippings file in the NIST archives.
3. Coblentz Society, 761 Main Street, Norwalk, CT 06859–0002. (http://www.galactic.com/Coblentz/Index.htm)
4. R. P. Feynman, R. B. Leighton, and M. Sands, *The Feynman Lectures in Physics*, Vol. 1, Sec. 41–2 (Fig. 41–4), Addison-Wesley, Reading (1963).
5. http://www-history.mcs.st-and.ac.uk/history/Mathematicians/Planck.html
6. W. W. Coblentz, Constants of Spectral Radiation of a Uniformly Heated Inclosure or So-Called Black Body, II, *Bull. Bur. Stand.* **13**, pp. 459–477 (1916).
7. P. J. Mohr and B. N. Taylor, CODATA Recommended Values of the Fundamental Physical Constants: 1998, Rev. Mod. Phys. **72**, pp. 351–495 (2000); also: J. Phys. Chem. Ref. Data **28**, pp. 1713–1852 (1999). See also http://physics.nist.gov/cuu/Constants/index.html .
8. W. W. Coblentz, Various Modifications of Bismuth-Silver Thermopiles Having a Continuous Absorbing Surface, *Bull. Bur. Stand.* **11**, pp. 131–187 (1914).
9. F. Hengstberger, *Absolute Radiometry*, Sec. 1.3.4, Academic Press, San Diego (1989).
10. W. W. Coblentz, Instruments and Methods Used in Radiometry—II, *Bull. Bur. Stand.* **9**, pp. 7–63 (1911).
11. W. W. Coblentz, Constants of Spectral Radiation of a Uniformly Heated Inclosure, or So-Called Black Body, I, *Bull. Bur. Stand.* **10**, pp. 1–77 (1913).

12. Y. Le Grand, *Light, Colour and Vision*, 2nd Ed., translation by R. W. G. Hunt, J. W. T. Walsh, and F. R. W. Hunt, pp. 67–68, Chapman and Hall, London (1968).
13. P. G. Nutting, The Luminous Equivalent of Radiation, *Bull. Bur. Stand.* **5**, pp. 261–308 (1908).
14. W. W. Coblentz and W. B. Emerson, Relative Sensibility of the Average Eye to Light of Different Colors and Some Practical Applications to Radiation Problems, *Bull. Bur. Stand.* **14**, pp. 167–236 (1918).
15. K. S. Gibson and E. P. T. Tyndall, The Visibility of Radiant Energy, *Sci. Pap. Bur. Stand.* **19**, pp. 131–191 (1923).
16. P. K. Kaiser, Photopic and Mesopic Photometry: Yesterday, Today and Tomorrow, in *Golden Jubilee of Colour in the CIE*, The Society of Dyers and Colourists, Bradford, UK (1981).
17. Commission Internationale de L'Éclairage, Sixième Session, Genève—Juillet 1924, Recueil des Travaux et Compte Rendu des Séances, Cambridge University Press, Cambridge (1926).
18. Additional historical accounts and technical information may be found in Y. Le Grand, *op. cit*., Cp. 4.
19. See, e.g., J. W. T. Walsh, *Photometry*, 3rd Ed., Constable and Company, London (1958).
20. *Le Système International d'Unités (SI)*, 7e Edition, BIPM, Pavillon de Breteuil, F-92312 Sèvres Cedex, France (1998). (Published electronically as http://www.bipm.fr/pdf/si-brochure.pdf .)
21. B. N. Taylor, The International System of Units (SI), Natl. Inst. Stand. Technol. Spec. Publ. 330 (1991). (Published electronically as http://physics.nist.gov/Document/sp330.pdf .)
22. C. W. Waidner and G. K. Burgess, Note on the Primary Standard of Light, *Electrical World* **52**, pp. 625–628 (1908).
23. H. T. Wensel, Wm. F. Roeser, L. E. Barbrow, and F. R. Caldwell, The Waidner-Burgess Standard of Light, *J. Res. Nat. Bur. Stand. (U.S.)* **6**, pp. 1103–1117 (1931).
24. W. R. Blevin and B. Steiner, Redefinition of the Candela and the Lumen, *Metrologia* **11**, pp. 97–104 (1975).
25. G. Wyszecki, W. R. Blevin, K. G. Kessler, and K. D. Mielenz, *Principles Governing Photometry*, BIPM, Pavillon de Breteuil, F-92312 Sèvres Cedex, France (1983).
26. T. R. Gentile, J. M. Houston, J. E. Hardis, C. L. Cromer, and A. C. Parr, National Institute of Standards and Technology high-accuracy cryogenic radiometer, *Appl. Opt*. **35**, pp. 1056–1068 (1996).
27. D. C. Ginnings and M. L. Reilly, Calorimetric measurement of thermodynamic temperature above 0 °C using total blackbody radiation, in *Temperature: Its Measurement and Control in Science and Industry*, H. H. Plumb, ed., Vol. 4, Pt. I, pp. 339–348, Instrument Society of America, Pittsburgh (1972).
28. T. J. Quinn and J. E. Martin, A radiometric determination of the Stefan-Boltzmann constant and thermodynamic temperatures between –40 °C and +100 °C, *Philos. Trans. R. Soc. London Ser. A* **316**, pp. 85–189 (1985).
29. J. E. Martin, N. P. Fox, and P. J. Key, A cryogenic radiometer of absolute radiometric measurements, *Metrologia* **21**, pp. 147–155 (1985).
30. E. F. Zalewski and C. R. Duda, Silicon photodiode device with 100 % external quantum efficiency, *Appl. Opt.* **22**, pp. 2867–2873 (1983).
31. A. C. Parr, *A National Measurement System for Radiometry, Photometry, and Pyrometry Based upon Absolute Detectors*, NIST Technical Note 1421 (1996). (Published electronically as http://physics.nist.gov/Pubs/TN1421/contents.html)
32. E. R. Williams, R. L. Steiner, D. B. Newell, and P. T. Olsen, Accurate Measurement of the Planck Constant, *Phys. Rev. Lett.* **81**, pp. 2404–2407 (1998).
33. D. B. Judd, Report of U. S. Secretariat Committee on Colorimetry and Artificial Daylight, CIE Proceedings Vo1. 1, Part 7, p. 11 (Stockholm, 1951), (Paris, Central Bureau of the CIE). See also G. Wyszecki and W. S. Stiles, *Color Science: Concepts and Methods, Quantitative Data and Formulae*, 2nd ed., p. 330, John Wiley & Sons, New York, (1982).
34. C. L. Cromer, G. Eppeldauer, J. E. Hardis, T. C. Larason, and A. C. Parr, National Institute of Standards and Technology detector-based photometric scale, *Appl. Opt*. **32**, pp. 2936–2948 (1993). C. L. Cromer, G. Eppeldauer, J. E. Hardis, T. C. Larason, Y. Ohno, and A. C. Parr, The NIST detector-based luminous intensity scale, *J. Res. Natl. Inst. Stand. Technol*. **101**, pp. 109–132 (1996). (Published electronically as http://nvl.nist.gov/pub/nistpubs/jres/101/2/j2crom.pdf .)
35. Y. Ohno, Photometric Calibrations, Natl. Inst. Stand. Technol. Spec. Publ. 250–37 (1997).
36. K. D. Mielenz, R. D. Saunders, and J. B. Shumaker, Spectroradiometric determination of the freezing temperature of gold, *J. Res. Natl. Inst. Stand. Technol*. **95**, pp. 49–67 (1990).
37. B. C. Johnson, C. L. Cromer, R. D. Saunders, G. Eppeldauer, J. Fowler, V. I. Sapritsky, and G. Dezsi, A method of realizing spectral irradiance based on an absolute cryogenic radiometer, *Metrologia* **30**, pp. 309–315 (1993).

38. B. K. Tsai, B. C. Johnson, R. D. Saunders, and C. L. Cromer, Comparison of filter radiometer spectral responsivity with the NIST spectral irradiance and illuminance scales, *Metrologia* **32**, pp. 473–477 (1996).
39. H. W. Yoon and C. E. Gibson, Determination of radiance temperatures using detectors calibrated for absolute spectral power response, in *Proceeding of TEMPMEKO '99, The 7th International Symposium on Temperature and Thermal Measurements in Industry and Science*, Vol. 2, J. F. Dubbeldam and M. J. de Groot, eds., pp. 737–742 (Delft, Netherlands, June 1999).
40. *Vision 2020: The Lighting Technology Roadmap*, Office of Building Technology, State and Community Programs, Energy Efficiency and Renewable Energy, U. S. Department of Energy (2000). (Published electronically as http://www.eren.doe.gov/buildings/vision2020/pdfs/lighting_roadmap.pdf .)
41. *Harnessing Light: Optical Science and Engineering for the 21st Century*, Committee on Optical Science and Engineering, National Research Council, National Academy Press, Washington (1998). (Published electronically as http://books.nap.edu/books/0309059917/html/index.html .)
42. A. C. Parr, The Candela and Photometric and Radiometric Measurements, *J. Res. Natl., Inst. Stand. Technol*. **106**, pp. 151–186 (2001). (Published electronically as http://nvl.nist.gov/pub/nistpubs/jres/106/1/j61par.pdf .)
43. *Centennial Issue: NBS/NIST — 100 Years of Measurement*, B. N. Taylor, Chief Ed., *J. Res. Natl., Inst. Stand. Technol*. **106**(1) (2001). (Published electronically as http://nvl.nist.gov/pub/nistpubs/jres/106/1/cnt106-1.htm .)
44. *A Century of Excellence in Measurements, Standards, and Technology: A Chronicle of Selected NBS/NIST Publications, 1901–2000*, D. R. Lide, Ed., Natl. Inst. Stand. Technol. Spec. Publ. 958 (2001). (Published electronically as http://nvl.nist.gov/pub/nistpubs/sp958-lide/cntsp958.htm .)