A Wide-Band Transconductance Amplifier for Current Calibrations

OWEN B. LAUG

Abstract—**A wide-band transconductance amplifier for current calibrations is described. The amplifier will deliver a ground-referenced constant current of 5 A rms from dc to over 100 kHz. Its stable magnitude and phase permit it to be used in precise power calibration systems to provide the current component of a phantom power source. The amplifier also provides a ground-referenced voltage output of 1 V/A for monitoring the magnitude and phase of the output current.**

I. Introduction

A TRANSCONDUCTANCE amplifier, often referred to as a programmable current-source or current-pump, ideally produces a current in a load proportional to an input voltage and maintains that current independent of the load terminal voltage. Such an amplifier is useful in a wide variety of calibration and testing activities on instruments and devices requiring a known stable source of current. Although the specific transconductance amplifier described here is general purpose, its first implementation was designed to provide a 5-A current output up to 50 kHz for the NBS Phase Angle Standard [1]. The amplifier features a ground-referenced output voltage proportional to the output current which can be used to drive an auto-zero circuit within the NBS Phase Angle Standard to compensate for the small overall phase lag of the amplifier.

The recent trend in precise power calibration techniques has focused attention on the need for highly stable voltage and current amplifiers to provide a phantom source of power to an instrument or meter under test. In this application not only is a stable magnitude of current and voltage required, but phase shift must be stable as well, and becomes especially critical when performing calibrations as low power factors. The transconductance amplifier described in this paper can be used to provide the current component of a phantom power source which is derived from a digital sinewave generator [2].

II. Description of Circuit

A simplified diagram of the transconductance amplifier is shown in Fig. 1. The operation of the circuit can be described as follows. A voltage V_{in} applied at the input terminal causes an output current I_o to flow into the load and develop a voltage drop across the shunt resistor R_s. This drop is amplified by differential amplifier U_2, and its output is fed back through R_2, where it is compared with the input voltage at the summing junction of U_1. Thus in an operational sense the output current is made proportional to the input voltage. A current booster circuit between the output of U_1 and the output load circuit provides current amplification and high-output current drive levels. An auxiliary output current monitor from the output of U_2 provides a convenient ground-referenced voltage proportional to the output current. Assuming idealized amplifiers and components, the equation governing the output current is

$$I_o = -V_{in}\left(\frac{R_2}{10R_sR_1}\right) \tag{1}$$

where the factor of 10 is the gain of differential amplifier U_2. Thus with a shunt resistance of 0.1 Ω and $R_2 = R_1$, the transconductance (I_o/V_{in}) has the convenient value of 1 A/V or 1 S. Also, with the same parameters, the output of U_2 develops a ground-referenced voltage proportional to current with a scale factor of 1 V/A.

III. Shunt Resistors

One of the more critical elements of the amplifier is the shunt resistor. It must be properly designed to provide a voltage drop across it that is a true measure of the current over a wide-frequency range with minimum phase shift. The quality of the shunt has a direct bearing on the overall accuracy, stability, and bandwidth of the amplifier. Moreover, for this particular design it is desirable that the phase characteristic or time constant be as low as possible so that the output current monitor can be used to accurately measure the phase, as well as the magnitude of the output current. The shunt must also have the necessary thermal capacity in order to avoid overheating to the point where a significant change in resistance would occur. A 0.1-Ω value of resistance was chosen for the shunt to operate at currents in the 0.5–5-A range. This resistance value provides a workable voltage drop and a manageable power dissipation.

The so-called noninductive wirewound power resistors are not satisfactory for this application. Although these types are constructed in a manner which tends to reduce their inductive reactance, they do not have low enough inductance. A 0.1-Ω resistor of this type may have as much as 0.2 μH of inductance which would limit the amplifier frequency response to 80 kHz and, more importantly,

Manuscript received July 2, 1984; revised February 11, 1985.
The author is with the Electrosystems Division, National Bureau of Standards, Washington, DC 20234.

0018-9456/85/1200-0639$01.00 © 1985 IEEE

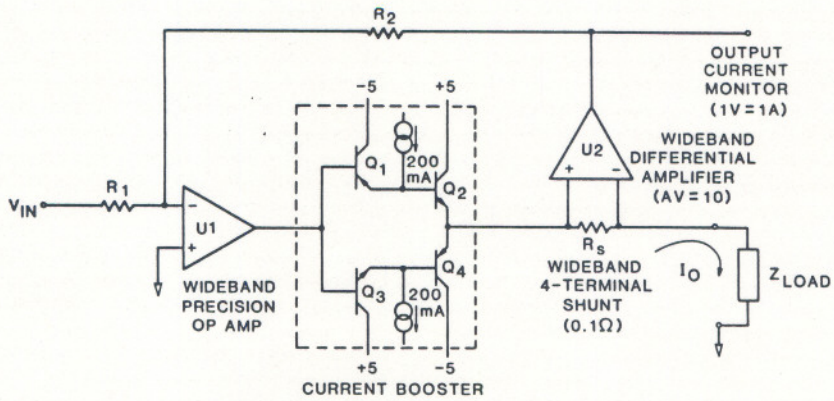

Fig. 1. Simplified diagram of transconductance amplifier.

would produce over 40 millidegrees of phase shift at 60 Hz.

The most widely accepted design of a low-resistance shunt that is considered superior for transient or wide-band measurements is the coaxial type. Another design which attempts to overcome or reduce the inductive effects consists of a thin strip of resistance material folded in the form of a hairpin [3]. Both of these designs can yield a calculable low value of ac–dc resistance ratio and very small time constants.

For the purpose of this transconductance amplifier an inexpensive, surprisingly good quality, low-reactance four-terminal shunt can be constructed by paralleling a large quantity of low-power metal film resistors between two copper plates. A 0.1-Ω shunt was constructed by sandwiching 100 10-Ω, $\frac{1}{4}$-W, 2 percent metal film resistors between two 0.25-mm (0.01-in) thick copper plates on 2.54-mm (0.1-in) centers in a 10 × 10 matrix. Holes were drilled in each of the plates to accept the resistor lead wires. The plates are separated only by the length of the resistor body to minimize lead lengths. The protruding leads were soldered on the outside of each plate and the excess lead length cut off. Fig. 2 shows two 0.1-Ω shunts constructed with this technique. The larger one was made with 100 10-Ω, $\frac{1}{2}$-W resistors mounted on 5-mm (0.2 in) centers. Table I shows the performance of each shunt in terms of its resistance and time constant as a function of frequency, which was measured on a special four-terminal resistance bridge [4]. The deviation in resistance over a frequency range from 100 Hz to 10 kHz is 40 ppm for the smaller assembly and 30 ppm for the larger unit. The time constant for each is in the order of 10 ns with the larger unit about 30 percent higher. A time constant of 10 ns will produce about 4 microradians of phase shift at 60 Hz.

Data was initially taken on both units with the potential terminals located at the opposite end from the current terminals. A coaxial cable or twisted leads brought off at right angles to the plates are used for the potential leads to minimize coupling to the surrounding fields. The polarity of the time constants measured on both shunts indicated a negative inductance which can also be considered equivalent to a shunt capacitance. An interesting effect was noted by measuring the time constant of the

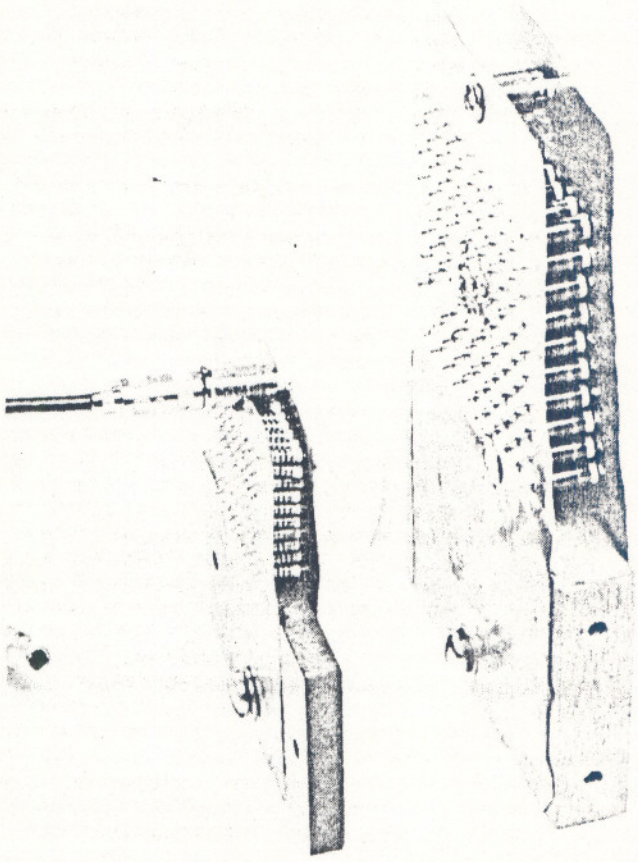

Fig. 2. Two 0.1-Ω four-terminal shunts, each made up of 100 metal film resistors in a 10 × 10 matrix soldered between two copper plates. The smaller unit is made with 1/4-W resistors and the larger one with 1/2-W resistors.

TABLE I

PERFORMANCE DATA OF TWO FOUR-TERMINAL SHUNTS CONSTRUCTED BY PARALLELING 100 10-Ω METAL FILM RESISTORS

	100 10-ohm 1/4 W		100 10-ohm 1/2 W	
Frequency Hz	Resistance Ohms	Time Constant μs	Resistance Ohms	Time Constant μs
100	0.0999322	0.010	0.0998068	0.014
400	0.0999322	0.010	0.0998063	0.013
1 K	0.0999282	0.008	0.0998070	0.013
5 K	0.0999302	0.009	0.0998059	0.013
10 K	0.0999286	0.008	0.0998040	0.013

larger unit for different locations of the potential terminals. When the potential terminals were located on the current terminal side of the resistor matrix, the polarity of the time constant indicated a positive inductance. Location of the potential leads in the center of the resistor matrix produced a very low, almost zero, time constant. This suggests that for this particular shunt design there exists an optimal location near the center of the resistor matrix for the potential terminals that can yield zero effective inductance. Apparently, the manner in which the magnetic field couples to the potential terminals produces this effect. The effect is similar to Silsbee's theoretical work on flat, strip-resistance standards which shows a method of compensating the potential leads by appropriate positioning for zero inductance [5].

The resistors used for constructing the shunt are specified to have a temperature coefficient of ± 100 ppm/°C. However, the overall temperature coefficient achieved for both units from a random sample of 100 resistors is in the order of $+30$ ppm/°C. The shunt made up of the 1/2-W resistors has a total thermal resistance of about 2°C/W and typically exhibits a 113 ppm overall resistance change for a change of current from 2.5 to 5 A. This may be too high for some applications and would require lower temperature coefficients of the individual resistors and/or a higher thermal capacity to reduce the temperature rise. Of course other shunt designs can be used such as the previously mentioned coaxial or "hairpin" type designed for a low-temperature coefficient of resistance and low-thermal resistance.

IV. Current Booster Circuit

The current booster circuit of Fig. 1 was implemented with discrete components in order to achieve wide-band width, low offset voltage, and minimum-power dissipation. Another advantage is that a separate current booster stage can be thermally isolated from the precision input amplifier U_1, thus avoiding offset voltages affected by the heat dissipated in the booster stages. Since the amplifier is direct coupled, any dc current produced at the output as a result of thermally induced offsets may adversely affect some loads. For this reason commercial power operational amplifiers may be unsuitable in this case because the power stages are essentially packaged together with the operational amplifier which results in offsets that become a function of the dissipated power. Also, most of these amplifiers tend not to have the power bandwidth required for this application.

The current booster is a class AB full-complementary-symmetry emitter follower designed to provide high-current drive (up to ± 15 A) from dc to over 500 kHz. The base-emitter junctions of the output pair (Q_2 and Q_4) are forward biased by the base-emitter voltages drops of their complementary pairs, Q_1 and Q_3. This arrangement produces a near zero input–output offset voltage, provided all the junctions are matched. Thermal tracking between the base-emitter junctions of each complementary pair is augmented by mounting each pair on the same heat sink. This mounting arrangement also tends to maintain a stable level of quiescent current through output pair Q_2 and Q_4 so that crossover distortion is kept low over all ranges of output stage dissipation.

V. Complete Circuit

A complete circuit diagram of the transconductance amplifier is shown in Fig. 3. All of the resistors which directly affect the transfer function of the amplifier (R_1 thru R_6) are precision, low-temperature coefficient (<1 ppm/°C) types. The differential amplifier is implemented with a wide-band precision operational amplifier and resistors R_3, R_4, R_5, and R_6. The R_3/R_4 *and* R_6/R_5 ratio pairs establish the differential gain which is set to a value of 10. The load regulation of the transconductance amplifier is dependent on the common-mode rejection of the differential amplifier, thus the ratios of the resistor pairs should be matched to 0.01 percent in order to maintain the inherent high common-mode rejection ratio of the operational amplifier. Also, good common-mode rejection is maintained at high frequencies by using relatively low values of resistances which tend to minimize any imbalances due to capacitive reactance at the amplifier input terminals. Measurements of the common-mode rejection ratio for the differential amplifier showed a rejection ratio of 103 dB at 100 Hz, and 75 dB at 100 kHz.

Since the differential amplifier is part of the feedback loop, its phase lag creates a potential source of instability for which compensation must be added. Compensation was provided by modifying the loop-gain curve to have a single dominant pole by means of a capacitor across U_1 and a lead network formed with a capacitor across the feedback resistor R_2. The capacitors were chosen to achieve unconditional stability for any load impedance, capacitive or inductive, at maximum bandwidth. Some of the practical considerations for achieving stable operation require a proper high-frequency power supply bypassing with ceramic disc capacitors at each collector of the booster stage and careful attention to grounding.

VI. Performance

The basic performance characteristics of the transconductance amplifier are listed below. These following values are not the results of extensive calibrations, but merely represent measurements that are intended to show capability:

1) transconductance: 1 S;
2) maximum output current: 8 A rms;
3) frequency response: dc–140 kHz (3 dB) @ 5 A rms;
4) compliance voltage: 2 V rms @ 5 A;
5) phase shift, input voltage to output current: 183° @ 5 kHz;
6) phase shift, output monitor to output current: 0.1° @ 5 kHz;
7) load regulation: 45 ppm change for a 1-V compliance voltage change @ 5 A, 60 Hz;
8) output offset current: $< \pm 150$ μA.

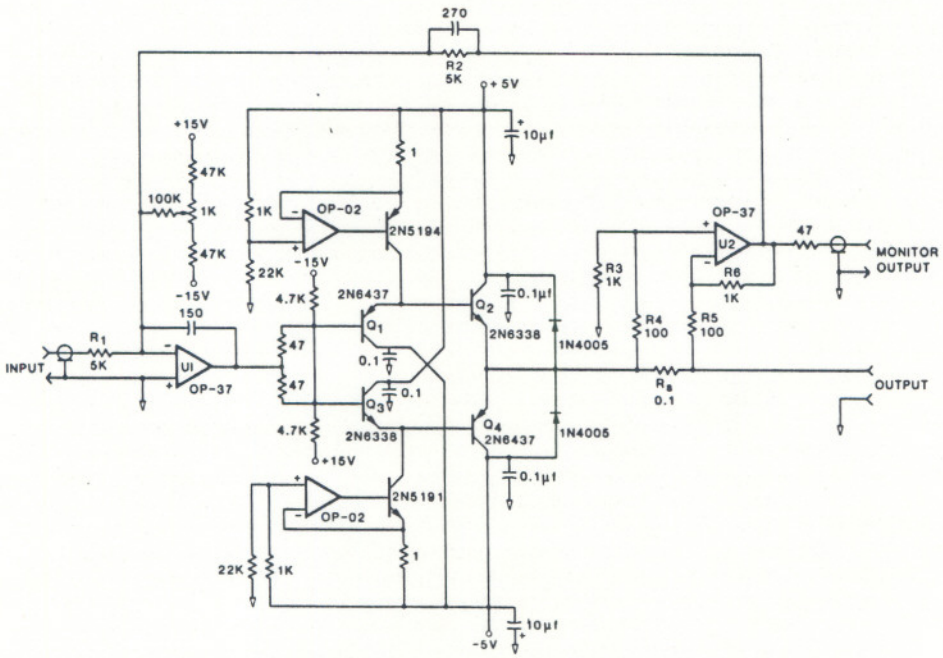

Fig. 3. Detailed circuit diagram for transconductance amplifier.

To evaluate the amplifier's short-term transconductance stability, a current comparator bridge and a phase-sensitive detector were used. The results showed a magnitude instability of less than ±5 ppm and a phase instability of ±8 microradian over a 3-min period at 5 A and 60 Hz after a 2-h warm-up period. Tests confirm that the main source of magnitude instability is caused by the resistance temperature coefficient of the shunt resistor. Enclosing the shunt to minimize the effects of air currents is helpful in order to achieve the above levels of stability.

The phase shift between the monitor voltage output and the current output is determined by the phase characteristics of the shunt and the bandwidth of the differential amplifier. However, in this design the dominant portion of the phase shift is contributed by the differential amplifier due to its upper 3-dB cutoff frequency of 3 MHz. At 60 Hz the phase shift due to the shunt and differential amplifier is about 1 millidegree which in many applications can be neglected or compensated for. The stability of this phase shift was not measured. The phase shift is also affected by the load capacitance on the monitor output. A wide-band buffer amplifier at the differential amplifier output will solve most loading problems.

The wide-band, smooth rolloff characteristic of the amplifier is exemplified by the clean square-wave response shown in Fig. 4. The measurement was made with a wide-band current probe and a low impedance (virtual short circuit) load. Although not shown, the same response can conveniently be observed at the output monitor terminal with a scale factor of 1 V/A. The amplifier will drive any load that is consistent with its current and compliance voltage capability. For example, a 1 A/μs current output rate of change into a 3-μH load will require at least 3 V of compliance, which is near the limit for this design. The compliance voltage is limited by the ±5-V supply, the

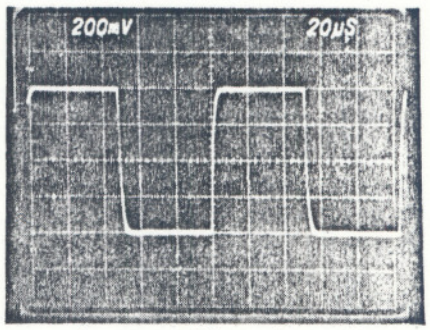

Fig. 4. The transconductance amplifier produces a clean 16-A peak-to-peak 10-kHz square-wave response into a low-impedance load. Output rise times measure 2.5 μs. Measurements were made with a wide-band current probe.

1-V drop required for linear operation across the output transistors, and the voltage drop across the shunt resistor. If higher compliance voltage is required, the current booster supply voltages can be increased, but at a penalty of increased dissipation of the output driver transistors.

The maximum output current is limited by the maximum output voltage swing (±12 V) of the differential amplifier U_2. Lowering the value of the shunt resistance or lowering the differential gain factor will lower the output voltage swing. However, greater current drive capability would also require additional current amplification of the booster stage.

VII. Conclusions

A wide-band transconductance amplifier intended for circuit calibrations at the 5-A level has been described. The importance of using a wide-band high-quality shunt in this design is emphasized. Also described is a reasonably high-quality 0.1-Ω shunt that can be easily constructed by paralleling 100 10-Ω metal film resistors. The amplifier has a frequency response from dc to over 100

kHz and is stable for all reactive loads. A ground-referenced output with a scale factor of 1V/A is provided for monitoring the magnitude and phase of the load current. Measurements indicate short-term magnitude and phase instability of ± 5 ppm and ± 8 microradian, which makes this transconductance amplifier useful for providing the current of a phantom source of power for precise power calibration measurements.

ACKNOWLEDGMENT

The author wishes to thank T. M. Souders for providing measurements of the shunts and N. M. Oldham for assisting in the characterization measurements.

REFERENCES

[1] R. S. Turgel and N. M. Oldham, "High precision audiofrequency phase calibration standards," *IEEE Trans. Instrum. Meas.*, vol. IM-27, pp. 460–464, Dec. 1978.

[2] N. M. Oldham, "Power calibration standard based on digitally synthesized sinewaves," to be published.

[3] F. B. Silsbee, 'A study of the inductance of four-terminal resistance standards," Scientific Pap., National Bureau of Standards, Washington, DC, no. 281, July 1916.

[4] T. M. Souders, "An audiofrequency four-terminal resistance bridge," *IEEE Trans. Instrum. Meas.*, vol. IM-23, pp. 342–345, Dec. 1974.

[5] F. B. Silsbee, "Notes on the design of four-terminal resistance standards for alternating current," *J. of Research*, National Bureau of Standards, Washington, DC, R. P. 133, vol. 4, p. 73, 1930.

Microprocessor-Based Microwave Dielectric Measurement of Liquids by Waveguide Plunger Technique

T. S. NATARAJAN, U. M. S. MURTHY, AND J. SOBHANADRI

Abstract—**The measurement of the dielectric permittivity (ϵ') and loss (ϵ'') of liquids at microwave frequencies (4–36 GHz) by the waveguide plunger technique is automated with the help of a single-board microcomputer, based on the Intel 8085 microprocessor. Both the data acquisition and analysis using curve-fitting technique are implemented in this stand-alone dedicated system. Measurements were made with some pure standard liquids, dilute solutions, and compared with literature values.**

I. INTRODUCTION

WITH THE advent of microprocessor chips, more and more laboratory experiments are being automated with microcomputers to exploit the versatility of these chips [1], [2]. This implementation, apart from relieving the experimenter from the often monotonous, yet important effort of monitoring and controlling the various parameters during an experiment, provides enormous flexibility by its programmable capability.

Quick data acquisition, using a digital data-logger for the measurement of dielectric parameters, has already been done for the case of coaxial lines by Sheppard [3]. The collected data was automatically recorded onto computer paper tape. Van Loon and Finsy [4] used a similar data acquisition system using digital electronics for the case of a waveguide plunger measurement technique. In this case the output also was obtained in digital form suitable for analysis by a main frame computer.

This paper describes the work done by the authors in which a low-cost single-board computer is used for both data acquisition and analysis to obtain the dielectric permittivity (ϵ') and loss (ϵ'') for the liquids directly. The experiment based on the waveguide plunger technique already reported elsewhere [5], can be used with the liquid in either pure form or diluted in nonpolar solvents.

II. DESIGN DETAILS

The design uses a commercially available, single-board microcomputer utilizing Intel's 8085 microprocessor. The facilities provided on the board are 2K bytes of ROM (UV-erasable EPROM-2716) and RAM (6116 static RAM), hex-keyboard for command and data entry in hexadecimal numbers, 48 I/O lines for external interface with two programmable peripheral interface chips-8255.

The experimental setup for pure liquids is shown schematically in Fig. 1 for *X*-band microwave frequencies. The microwave bench is assembled with precision components manufactured by Sivers Lab (Philips), Sweden. The dielectric cell used is similar to the one already reported [7]. The crystal detector mounted on the sidearm of the directional coupler is operated in the square-law region of its characteristics, so that the measured current through the diode (as given by the microammeter) is a measure of the microwave incident power.

Manuscript received April 27, 1984; revised April 1, 1985.

The authors are with the Department of Physics, Indian Institute of Technology, Madras, 600 036 India.

0018-9456/85/1200-0643$01.00 © 1985 IEEE