LINKING MICROWAVE REMOTE-SENSING MEASUREMENTS TO FUNDAMENTAL NOISE STANDARDS*

J. Randa, D.K. Walker, M. Francis, and K. MacReynolds

Electromagnetics Division
National Institute of Standards and Technology
Boulder, CO 80305-3328

Abstract

We outline the formalism for linking microwave remote-sensing measurements to fundamental noise standards and estimate the achievable uncertainty. Plans for the development and use of standard radiometers for this purpose are presented.

Introduction

The U.S. National Institute of Standards and Technology (NIST) has been performing antenna and noise measurements at microwave frequencies for several decades. Recently we have embarked on a program that integrates expertise from both these fields in an effort to improve calibration methods for microwave radiometers used in remote sensing. One component of that program will be to (reversibly) convert the current NIST noise radiometers to standard radiometers for remote sensing. This will be accomplished by the rather simple expedient of connecting a well characterized antenna to the radiometer input, where one would "normally" connect a noise source whose noise temperature is to be measured. In this paper we give a brief overview of the formalism for such a standard radiometer, estimate the achievable uncertainty, and briefly indicate plans for its development and use.

Theory

NIST has a battery of microwave radiometers that measure noise temperature at a coaxial or waveguide reference plane. These radiometers are calibrated with two primary noise standards, one at ambient temperature, the other at cryogenic (liquid nitrogen) temperature. Therefore, in order to link microwave remote-sensing measurements to the primary noise standards, we need to relate the measurand in a remote sensing radiometer to the noise temperature at the output of the antenna, plane 1 in Fig. 1. The development follows that in [1]; full details will be found in [2]. Far-field conditions are assumed throughout the development.

Radiometers used in microwave remote sensing measure the radiated power incident on the radiometer's antenna, but the results are usually expressed in terms of a brightness temperature, which is defined in terms of the spectral brightness. The brightness $B(\theta, \varphi)$ is the power per unit area and solid angle incident on (or emitted from) a surface, and the spectral brightness $B_f(\theta,\varphi)$ is the brightness per unit frequency. We define the brightness temperature $T_B(\theta, \varphi)$ by

$$T_B(\theta,\phi) \equiv \frac{\lambda^2 B_f(\theta,\phi)}{2k} \quad , \tag{1}$$

where λ is the wavelength, and k is Boltzmann's constant. (This differs from the conventional definition, in which eq. (1) holds only in the Rayleigh-Jeans approximation, $kT << hf$.) In terms of the incident brightness temperature, the power received by an antenna can be written as

$$P = kT_{A,in}\Delta f \ , \tag{2}$$

where $T_{A,in}$ is the input antenna temperature (*i.e.*, at the antenna aperture), defined as

$$T_{A,in} \equiv \frac{A_{eff}}{\lambda^2}\int_{4\pi} T_B(\theta,\phi)F_n(\theta,\phi)d\Omega \ , \tag{3}$$

where A_{eff} is the (maximum) effective aperture of the antenna, $T_B(\theta,\varphi)$ is the brightness temperature incident on the antenna, and $F_n(\theta,\varphi)$ is the normalized antenna pattern. The integral in eq. (3) is over the full 4π solid angle, whereas our interest is in the scene viewed by the main beam. We therefore break up $T_{A,in}$ into two parts, one containing the integral over the main beam and the other containing the rest. We also define the main beam efficiency η_M, the fraction of the antenna pattern contained in the main beam,

$$\eta_M \equiv \frac{\int_{main} F_n(\theta,\phi)d\Omega}{\Omega_p} \ , \tag{4}$$

where $\Omega_p = \int_{4\pi} F_n(\theta,\phi)d\Omega$. Then $T_{A,in}$ can be written as

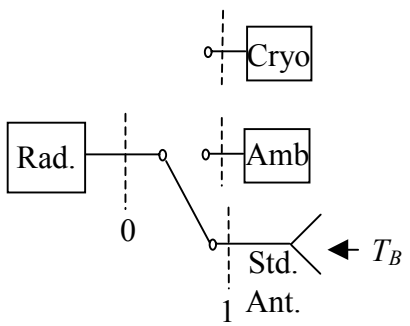

Fig. 1 Configuration for standard radiometer.

*U.S. Government work, not protected by U.S. copyright.

$$T_{A,in} = \eta_M \overline{T_{ML}} + (1-\eta_M)\overline{T_{SL}} \ , \qquad (5)$$

where

$$\overline{T_{ML}} = \frac{\int_{main} T_B(\theta,\phi) F_n(\theta,\phi) d\Omega}{\int_{main} F_n(\theta,\phi) d\Omega}$$

$$\overline{T_{SL}} = \frac{\int_{other} T_B(\theta,\phi) F_n(\theta,\phi) d\Omega}{\int_{other} F_n(\theta,\phi) d\Omega} \ . \qquad (6)$$

The input antenna temperature $T_{A,in}$ is related to the noise temperature at the antenna waveguide or coaxial output by $T_{A,out} = \alpha T_{A,in} + (1-\alpha)T_a$, where α is the available power ratio between the two planes (approximately equal to the inverse of the loss factor L), and T_a is the noise temperature corresponding to the physical temperature of the antenna. Using eq. (5) we can then write

$$\overline{T_{ML}} = \frac{1}{\alpha\eta_M} T_{A,out} - \frac{(1-\eta_M)}{\eta_M}\overline{T_{SL}} - \frac{(1-\alpha)}{\alpha\eta_M} T_a \ . \qquad (7)$$

Equation (7) is the desired result for our standard-radiometer measurements. It allows us to determine the incident brightness temperature in the main lobe $\overline{T_{ML}}$ in terms of $T_{A,out}$, α, η_M, $\overline{T_{SL}}$, and T_a. In eq. (7) $T_{A,out}$ is the noise temperature at the output of the antenna, measured by the radiometer; α is the available power ratio between the antenna aperture and its output, approximately equal to $1/L$; η_M is the main beam efficiency, defined in eq. (4) and determined from the normalized antenna pattern; $\overline{T_{SL}}$ is the effective side-lobe brightness temperature, defined by eq. (6); and T_a is the noise temperature of the antenna.

Uncertainty and Implementation

To control the effect of $\overline{T_{SL}}$ in eq. (7), we need to control the environment in which the standard radiometer operates. We intend to use an enclosure with absorptive walls, maintained at room temperature, which will also be the temperature of the antenna, T_a. Equation (7) then becomes

$$\overline{T_{ML}} = T_a + \frac{1}{\alpha\eta_M}\left(T_{A,out} - T_a\right). \qquad (8)$$

We expect to be able to control T_a to within about 0.2 K. Over the 200 K – 300 K range, $T_{A,out}$ can be measured with a standard uncertainty of about 0.3 K up to about 26 GHz. Assuming we use a simple antenna, such as a standard-gain horn, ohmic losses are best determined by calculation, using any of a number of software packages. For common, commercial standard-gain horns the ohmic losses are less than 0.03 dB for the worst-case conducti-vity. The uncertainty in the electrical conductivity is the major uncertainty in determining the ohmic losses, and it will lead to a fractional uncertainty of about 0.5 % in α. The main beam efficiency η_M can be determined from a measurement of the antenna pattern. We are currently measuring a standard-gain horn on the NIST near-field range, to establish how accurately we can determine η_M. If the fractional uncertainty in η_M can be kept to about the same as that in α, we should be able to achieve a standard uncertainty in $\overline{T_{ML}}$ of about 0.3 K to 0.8 K for $\overline{T_{ML}}$ between 200 K and 300 K.

Our intent is initially to develop a standard radiometer for the WR-42 waveguide band (18 – 26.5 GHz) and then to expand to other bands as needed and possible. The standard radiometer could be used at NIST to measure calibration targets used for remote sensing radiometers, thereby providing a link to fundamental noise standards. NIST also intends to develop a portable standard calibration target, which would be compared to the standard radio-meter as a check and which could be used to calibrate radiometers at other locations. Such a comparison program for optical frequencies is already operating at NIST [3].

Acknowledgment

This work was supported in part by the NOAA/NESDIS/Integrated Program Office.

References

[1] F. Ulaby, R. Moore, and A. Fung, *Microwave Remote Sensing: Fundamentals and Radiometry, Vol. 1*, Norwood, MA, Artech House, 1981.

[2] J. Randa, D.K. Walker, K. MacReynolds, and M. Francis, NIST Technical Note, in preparation.

[3] J.P. Rice and B.C. Johnson, "NIST activities in support of space-based radiometric remote sensing," *Proc. SPIE*, Vol. 4450, pp. 108 – 126, 2001.