U.S. Department of Justice
Office of Justice Programs
National Institute of Justice

Miniature Surveillance Recorders

NIJ Standard-0226.00

January 1990

U.S. DEPARTMENT OF JUSTICE
National Institute of Justice

James K. Stewart, Director

The technical effort to develop this standard was conducted under Interagency Agreement LEAA-J-IAA-021-3, Project No. 8703.

ACKNOWLEDGMENTS

This standard was formulated by the Law Enforcement Standards Laboratory (LESL) of the National Institute of Standards and Technology (NIST) (formerly the National Bureau of Standards) under the direction of Marshall J. Treado, Program Manager for Communications Systems, and Lawrence K. Eliason, Chief of LESL. P. Michael Fulcomer of the NIST Electricity Division was responsible for the preparation of this standard. The preparation of this standard was sponsored by the National Institute of Justice, Lester D. Shubin, Director, Science and Technology. The standard has been reviewed and approved by the Technology Assessment Program Advisory Council.

FOREWORD

This document, NIJ Standard-0226.00, Miniature Surveillance Recorders, is an equipment standard developed by the Law Enforcement Standards Laboratory of the National Institute of Standards and Technology (formerly the National Bureau of Standards). It is produced as part of the Technology Assessment Program of the National Institute of Justice. A brief description of the program appears on the inside front cover.

This standard is a technical document that specifies performance and other requirements equipment should meet to satisfy the needs of criminal justice agencies for high quality service. Purchasers can use the test methods described in this standard to determine whether a particular piece of equipment meets the essential requirements, or they may have the tests conducted on their behalf by a qualified testing laboratory. Procurement officials may also refer to this standard in their purchasing documents and require that equipment offered for purchase meet the requirements. Compliance with the requirements of the standard may be attested to by an independent laboratory or guaranteed by the vendor.

Because this NIJ standard is designed as a procurement aid, it is necessarily highly technical. For those who seek general guidance concerning the selection and application of law enforcement equipment, user guides have also been published. The guides explain in nontechnical language how to select equipment capable of the performance required by an agency.

NIJ standards are subjected to continuing review. Technical comments and recommended revisions are welcome. Please send suggestions to Lester D. Shubin, Director, Science and Technology, National Institute of Justice, U.S. Department of Justice, Washington, DC 20531.

Before citing this or any other NIJ standard in a contract document, users should verify that the most recent edition of the standard is used. Write to: Chief, Law Enforcement Standards Laboratory, National Institute of Standards and Technology, Gaithersburg, MD 20899.

Lester D. Shubin
Director, Science and Technology
National Institute of Justice

NIJ STANDARD
FOR
MINIATURE SURVEILLANCE RECORDERS

CONTENTS

	Page
FOREWORD	iii
1. PURPOSE AND SCOPE	1
2. CLASSIFICATION	1
3. DEFINITIONS	1
4. REQUIREMENTS	4
4.1 General Requirements	4
4.2 Minimum Performance	4
4.3 User Information	4
4.4 Performance at Environmental Extremes	5
4.5 Electronic Characteristics	6
4.6 Tape Transport Characteristics	7
4.7 Battery Service Life	7
5. TEST METHODS	8
5.1 Standard Test Conditions	8
5.2 Test Equipment	11
5.3 Test Tapes	12
5.4 Test Sequence	12
5.5 Electronic Tests	13
5.6 Tape Transport Tests	18
5.7 Battery Service Life Test	20
5.8 Environmental Tests	20
APPENDIX A—REFERENCES	22
APPENDIX B—BIBLIOGRAPHY	23

COMMONLY USED SYMBOLS AND ABBREVIATIONS

A	ampere	H	henry	nm	nanometer
ac	alternating current	h	hour	No.	number
AM	amplitude modulation	hf	high frequency	o.d.	outside diameter
cd	candela	Hz	hertz (c/s)	Ω	ohm
cm	centimeter	i.d.	inside diameter	p.	page
CP	chemically pure	in	inch	Pa	pascal
c/s	cycle per second	ir	infrared	pe	probable error
d	day	J	joule	pp.	pages
dB	decibel	L	lambert	ppm	part per million
dc	direct current	L	liter	qt	quart
°C	degree Celsius	lb	pound	rad	radian
°F	degree Fahrenheit	lbf	pound-force	rf	radio frequency
diam	diameter	lbf·in	pound-force inch	rh	relative humidity
emf	electromotive force	lm	lumen	s	second
eq	equation	ln	logarithm (natural)	SD	standard deviation
F	farad	log	logarithm (common)	sec.	section
fc	footcandle	*M*	molar	SWR	standing wave radio
fig.	figure	m	meter	uhf	ultrahigh frequency
FM	frequency modulation	min	minute	uv	ultraviolet
ft	foot	mm	millimeter	V	volt
ft/s	foot per second	mph	mile per hour	vhf	very high frequency
g	acceleration	m/s	meter per second	W	watt
g	gram	N	newton	λ	wavelength
gr	grain	N·m	newton meter	wt	weight

area = unit^2 (e.g., ft^2, in^2, etc.); volume = unit^3 (e.g., ft^3, m^3, etc.)

PREFIXES

d	deci (10^{-1})	da	deka (10)
c	centi (10^{-2})	h	hecto (10^2)
m	milli (10^{-3})	k	kilo (10^3)
μ	micro (10^{-6})	M	mega (10^6)
n	nano (10^{-9})	G	giga (10^9)
p	pico (10^{-12})	T	tera (10^{12})

COMMON CONVERSIONS
(See ASTM E380)

ft/s × 0.3048000 = m/s
ft × 0.3048 = m
ft·lbf × 1.355818 = J
gr × 0.06479891 = g
in × 2.54 = cm
kWh × 3 600 000 = J

lb × 0.4535924 = kg
lbf × 4.448222 = N
lbf/ft × 14.59390 = N/m
lbf·in × 0.1129848 = N·m
lbf/in^2 × 6894.757 = Pa
mph × 1.609344 = km/h
qt × 0.9463529 = L

Temperature: $(T_{°F} - 32) \times 5/9 = T_{°C}$

Temperature: $(T_{°C} \times 9/5) + 32 = T_{°F}$

NIJ STANDARD FOR MINIATURE SURVEILLANCE RECORDERS

1. PURPOSE AND SCOPE

The purpose of this document is to establish performance requirements and methods of test for miniature recording devices and systems for use in undercover surveillance. A system includes the recording device and its power supply, a separate microphone, and a playback unit. Except for the microphone, all parts of the miniature surveillance recording system are addressed by this standard. The recording device and playback unit may be combined or separate. This standard places requirements on the output from the playback unit only, since this characteristic is most critical to the effectiveness of the system.

2. CLASSIFICATION

For the purpose of this standard, miniature surveillance recorders (MSR) are classified by general performance level as defined below. The requirements and the probable cost are both higher for type I devices; however, in many instances a type II device may suffice.

2.1 Type I

A miniature surveillance recording system that allows a listener to identify who is speaking in addition to what is being said. The system should have a frequency response from 200 Hz to 5 kHz, with 315 Hz as the standard reference frequency.

2.2 Type II

A miniature surveillance recording system that allows a listener to identify what is being said but not necessarily who said it. The system should have a frequency response from 400 Hz to 2.5 kHz, with 500 Hz as the standard reference frequency.

3. DEFINITIONS

The principal terms used in this document are defined in this section. Because the definitions have been tailored to this standard, they may differ slightly from usage found elsewhere.

3.1 Attack Time

The time required for the automatic level control circuitry to reduce the signal recorded on the tape to within 3 dB of the original value after a sudden 20-dB increase in the microphone input voltage.

3.2 Automatic Level Control (ALC)

The process by which the output of a device is automatically adjusted in a specific manner as a function of the input. For this standard, the ALC circuitry acts as a limiter to keep the tape signal level below saturation at times of very strong input signals.

3.3 Channel

A single electrical signal path in a tape recorder/ reproducer. More than one channel may be present, each of which is designed to record and reproduce separate information.

3.4 Clipping Level

The maximum sine wave signal at the playback output which produces, when viewed on an oscilloscope connected to the output, no visible signs of clipping, flat-topping or other indication of distortion to the trained observer. It is specified at the frequency which produces maximum playback output for a given recorded input.

3.5 Crosstalk Ratio

The ratio of wanted to unwanted output signal in an output channel when reproducing a tape that has been recorded with identical information on all channels that are stereophonically unrelated to the channel being tested.

3.6 Drift

Variations below 1 Hz in the velocity of the tape transport mechanism during recording and reproducing.

3.7 Dynamic Range

At standard reference frequency, the difference, in decibels, between the microphone input signal level that, when recorded on a tape, results in the maximum recorded level, and the microphone input signal level that, when recorded on a tape, results in an output level which is only 10 dB higher than the weighted output noise voltage.

3.8 Flutter

An undesired form of frequency modulation introduced into the playback output signal by irregular motion of the tape transport mechanism during the recording/reproducing process, at frequencies above 10 Hz.

3.9 Frequency Response

The frequency range over which the playback output voltage does not vary by more than a specified amount relative to its value at the standard reference frequency.

3.10 Maximum Recorded Level (MRL)

The recorded level at standard reference frequency that produces, under standard test conditions, a playback output at which total harmonic distortion (THD) becomes 5 percent or where THD begins to rise quickly if always greater than 5 percent. It is expressed in decibels relative to the reference recorded level.

3.11 Microphone Input Sensitivity

The level, in millivolts, of a sinusoidal signal at the standard reference frequency that, when applied to the microphone input terminals of the recorder under standard test conditions, results in a recording of reference level or reference recorded level on the tape. Note that a signal level at *any* frequency can *equal* the microphone input sensitivity level.

3.12 Microphone Maximum Input

The level of a sinusoidal signal that, when applied at the microphone input terminals of the recorder, results in a recording at the clipping level.

3.13 Nominal Value

The numerical value of a recorder or system characteristic as specified by the manufacturer.

3.14 Output Level

The playback rms output voltage measured while reproducing the reference recorded level under standard test conditions.

3.15 Playback Output

The output terminals or connectors through which electrical signals resulting from playback of a recorded tape are passed either (1) to a transducer (headphones, speaker, etc.) for direct conversion into sound, or (2) to another amplifier for eventual conversion into sound. The voltage and current available at the output and the output impedance will vary depending upon the function for which the output is designed.

3.16 Reference Recorded Level (RRL)

The recorded level on a test tape used as a reference for other measurements. For the purpose of this standard, it is defined as the recorded level at standard reference frequency that produces, under standard test conditions, a playback output at which the third harmonic distortion just becomes 1 percent, or at which the third harmonic distortion just begins to rise quickly if it is always greater than 1 percent.

3.17 Release Time

The time required for the automatic level control circuitry to increase the signal recorded on the tape to within 3 dB of the original value after a sudden 20-dB decrease in the microphone input voltage.

3.18 Root-Mean-Square (rms)

The value of an alternating current voltage which is equal to the value of the steady direct-current voltage that would produce the same heating power if each were connected to resistors of equal value.

3.19 Second Harmonic Distortion

For a sinewave frequency, f, it is the ratio, expressed as a percent, of the rms voltage of the signal component at frequency 2f to the rms voltage of the signal component at frequency f.

3.20 Speed Error

The maximum value of speed deviation expressed as a percentage of the correct speed.

3.21 Standard Reference Frequency

The frequency used as a reference when specifying the frequency response of a miniature surveillance recorder. Also the frequency at which many of the recorder/reproducer characteristics are measured.

3.22 Stereo Separation

The ratio of wanted to unwanted signals in an output channel when a single-track recording containing left-channel information is recorded and subsequently reproduced on left and right channels and when a single track recording containing right-channel information is recorded and subsequently reproduced on right and left channels.

3.23 Tape Saturation Level (TSL)

The recorded level at standard reference frequency that produces, under standard test conditions, a playback output at which third harmonic distortion becomes 5 percent (or where third harmonic distortion equals the total harmonic distortion value at the maximum recorded level, if third harmonic distortion is always greater than 5%), or at which further increase in input level produces a decrease in output level,

whichever is less. It is expressed in decibels relative to the RRL.

3.24 Third Harmonic Distortion

For a sine wave of frequency f, it is the ratio, expressed as a percent, of the rms voltage of the signal component at frequency 3f to the rms voltage of the signal component at frequency f.

3.25 Track

The portion of magnetic tape that contains one channel of information.

3.26 Total Harmonic Distortion (THD)

The square root of the sum of the squares of the individual harmonic ratios (see second and third harmonic distortion) expressed as a percent. All harmonic components whose amplitude is less than 30 percent of the amplitude of the strongest harmonic component (or more than 10 dB in amplitude below the strongest harmonic) can be ignored.

3.27 Weighted Peak Flutter

Measurement of flutter that is adjusted to account for the fact that the human ear does not detect certain flutter frequencies as well as others, i.e., the weighted flutter measurement device employs a frequency response similar to the sensitivity of the ear to flutter variations versus the frequency of those variations in order to give a more useful indication of the subjective effects of flutter than would an unweighted measurement.

3.28 Weighted Signal-to-Noise Ratio

The ratio of the playback output rms voltage, measured while reproducing a tape that was recorded with an input equal to the microphone input sensitivity, to the weighted rms output noise voltage. The instrument used to measure the latter incorporates a frequency selective characteristic which discriminates heavily against low-frequency sounds. This gives an indication closely correlated with the subjective effects of noise on the intelligibility of an audio signal.

4. REQUIREMENTS

4.1 General Requirements

Certain features, although not directly related to performance, *must* be incorporated into a miniature surveillance recorder. Other features are a desirable option. Table 1 is a listing of the various features divided into recorder and playback unit features. Those in capital letters are required. In addition to the features shown, the recorder shall have: (1) low susceptibility to detection of its bias oscillator signal, and (2) a size suitable for concealment, i.e., dimensions no greater than $13 \times 7 \times 2.5$ cm thick. Voice-activated recording is NOT a desirable feature.

4.2 Minimum Performance

The miniature surveillance recorder performance shall meet or exceed the requirements for each characteristic as given below and in table 2. Minimum continuous recording time, i.e, no interruptions either to turn over or change tapes, or from voice actuated recording, shall be 2 h for type I and 1.5 h for type II devices.

4.3 User Information

A nominal value for each of the characteristics listed in table 2 shall be included in the information supplied to the user by the manufacturer or distributor. The manufacturer or distributor shall also recommend the type and length of tape to be used for recording, and shall specify the speed (if more than one is available) at which the recordings should be made in order to meet the minimum recording time specification plus all other specifications listed in table 2. The manufacturer or distributor shall also specify: (1) whether or not the recorder utilizes automatic level control and, if so, the approximate input voltage range in decibels over

which it operates; and (2) whether or not the recorder utilizes a noise-reduction system and, if so, information on how to achieve maximum benefit from the system with least degradation in other parameters. In addition, the manufacturer shall provide:

a. a microphone input sensitivity rating, a microphone maximum input rating, and the microphone input impedance.
b. the range of temperatures over which the equipment is designed to be operated.
c. nominal operating voltages.
d. size and number of batteries required.
e. current drain in both record and playback modes for battery-operated portions of the equipment.
f. playback output impedance, output level, and output load impedance.
g. information on the care and maintenance of the system.
h. a statement indicating that the MSR conforms to this standard.

TABLE 1. *Miniature surveillance recorder features*
(Those in CAPS are required. Others are a desirable option.)

Recorder
LOCKING REMOTE MICROPHONE JACKS
HEADPHONE OR MONITOR OUTPUT
READILY AVAILABLE BATTERIES
TAMPER PROOF SWITCHING
RECORD INDICATOR
NO AUDIBLE SOUNDS FROM TAPE TRANSPORT MECHANISM
Two record speeds
Locking remote control start/stop jack, with option to disable stop function
Battery check
Stereo recording
Accepts readily available audio cassette tapes
Playback Unit
LONG LIFE POWER SOURCE (AT LEAST 10 TIMES LONGER THAN RECORDER BATTERY SERVICE LIFE), EITHER INTERNAL OR EXTERNAL
TAPE COUNTER OR POSITION INDICATOR OF SOME TYPE
HEADPHONE OUTPUT
Remote pause control

4.4 Performance at Environmental Extremes

The ability of the recorder to operate in the environmental extremes specified in this section shall be determined using the procedures described in section 5.8. In acceptance testing, it is suggested that these tests be performed before conducting the other tests. Otherwise, the environmental tests may be deferred until the other tests are completed.

4.4.1 Temperature Stability

Low temperature tests of the recorder shall be conducted at 5 °C (41 °F) or the lowest temperature at which the manufacturer states that the equipment will operate properly, whichever is lower, and high temperature tests of the recorder shall be conducted at 45 °C (113 °F) or the highest temperature at which the manufacturer states that the equipment will operate properly, whichever is higher.

When tested in accordance with section 5.8.1 at the low and high temperatures defined above, the MSR performance for those characteristics footnoted in table 2 shall not fall outside the limits specified in table 2.

4.4.2 Humidity Stability

The recorder shall be tested at a temperature of 40 °C (104 °F) and at least 90 percent relative humidity.

When tested in accordance with section 5.8.2 at the temperature and humidity defined above, the MSR performance for those characteristics footnoted in table 2 shall not fall outside the limits specified in table 2.

TABLE 2. *Minimum performance requirements for miniature surveillance recorders*

Characteristic	*Test frequency*	*Minimum requirement* *Type I*	*Type II*	*Requirement section*	*Test method section*
Minimum Recording Time		2 h	1.5 h	4.2	
Electronic					
Microphone Input Sensitivity	Std.				5.5.2
Output Level	Std.				5.5.2
Microphone Maximum Input	Std.				5.5.3
Maximum Recorded Level	Std.				5.5.3
Tape Saturation Level	Std.				5.5.3
Clipping Level	Std.				5.5.4
Frequency Response[a] (±3 dB relative to Std. Ref. Freq.)		200 Hz to 5 kHz	400 Hz to 2.5 kHz	4.5.1	5.5.6
Weighted Signal-to-Noise Ratio[a]	Std.	60 dB	40 dB	4.5.2	5.5.7
	1 kHz	60 dB	40 dB		
Total Harmonic Distortion[a]	Std.	3%	8%	4.5.3	5.5.8
	1 kHz	3%	6%		
Dynamic Range[a]	Std.	70 dB	40 dB	4.5.4	5.5.9
Crosstalk	Std.	50 dB	45 dB	4.5.5	5.5.10
	1 kHz	50 dB	45 dB		
	3.15 kHz	50 dB	45 dB		
Stereo Separation	Std.	50 dB	30 dB	4.5.6	5.5.11
	1 kHz	50 dB	30 dB		
	3.15 kHz	50 dB	30 dB		
ALC Attack Time	Std.	50 ms	100 ms	4.5.7	5.5.12
ALC Release Time	Std.	500 ms	1.0 s	4.5.7	5.5.12
Tape Transport					
Weighted Peak Flutter[a]	3.15 kHz	0.5%	1.5%	4.6.1	5.6.1
Speed Error[a]	3.15 kHz	±0.5%	±1.5%	4.6.2	5.6.2
Drift	3.15 kHz	0.5%	2.0%	4.6.3	5.6.3
Battery Service Life		4 h	3 h	4.7	5.7

[a] The minimum requirement for these characteristics also applies at the environmental extremes specified in section 4.4. The test procedures are in section 5.8.

4.5 Electronic Characteristics

The MSR electronic characteristics specified in this section shall be measured in accordance with the general requirements of sections 5.1 through 5.4 and the specific procedures in section 5.5. Table 2 includes a listing of the test section that provides instructions for the determination of each characteristic.

Measurement of certain MSR characteristics for which there are no specific requirements is also necessary. These characteristics must be determined (independently of information supplied by the manufacturer) prior to measuring MSR performance in other areas. Sections 5.5.1 through 5.5.4 describe these measurement procedures. These characteristics are included in table 2, but with no specific requirement.

4.5.1 Frequency Response

When each channel is tested in accordance with section 5.5.6, the change in playback output voltage with frequency shall not exceed ±3 dB with respect to its value at the standard reference frequency over a frequency range from 200 Hz to 5 kHz for type I and 400 Hz to 2.5 kHz for type II devices. For devices with an optional noise reduction system, this requirement shall be met with the system both on and off.

4.5.2 Weighted Signal-to-Noise Ratio

When each channel is tested in accordance with section 5.5.7, the weighted signal-to-noise ratio at the playback output at both the standard reference frequency and 1 kHz shall exceed 60 dB for type I and 40 dB for type II devices. For devices with an optional noise reduction system, this requirement shall be met only when the system is on.

4.5.3 Total Harmonic Distortion

When each channel is tested in accordance with section 5.5.8, the THD measured at the playback output, for an input equal to the microphone input sensitivity, shall not exceed 3 percent for type I devices at either the standard reference frequency or at 1 kHz. For type II devices, the THD shall not exceed 8 percent at the standard reference frequency or 6 percent at 1 kHz. For devices with an optional noise reduction system, this requirement shall be met with the system both on and off.

4.5.4 Dynamic Range

When each channel is tested in accordance with section 5.5.9, the dynamic range, measured at the standard reference frequency, shall exceed 70 dB for type I and 40 dB for type II devices. For devices with an optional noise reduction system, this requirement shall be met only when the system is on.

4.5.5 Crosstalk

When tested in accordance with section 5.5.10, the crosstalk ratio between stereophonically unrelated tracks, measured at standard reference frequency, 1 kHz, and 3.15 kHz shall be at least 50 dB for type I and at least 45 dB for type II devices.

4.5.6 Stereo Separation

When tested in accordance with section 5.5.11, the stereo separation of a stereo recorder/reproducer measured at standard reference frequency, 1 kHz, and 3.15 kHz, shall be at least 50 dB for type I and at least 30 dB for type II devices.

4.5.7 Automatic Level Control Attack and Release Times

For those recorder/reproducers utilizing ALC, the attack and release times, when each channel is tested individually in accordance with section 5.5.12, shall not exceed 50 and 500 ms, respectively, for type I devices and not exceed 100 ms and 1 s, respectively, for type II devices.

4.6 Tape Transport Characteristics

The MSR tape transport characteristics specified in this section shall be measured in accordance with the general requirements of sections 5.1 through 5.4 and the specific procedures in section 5.6. Table 2 includes a listing of the test section that provides instructions for the determination of each characteristic.

4.6.1 Weighted Peak Flutter

When tested in accordance with section 5.6.1, the weighted peak flutter of the recorder/reproducer shall not exceed 0.5 percent for type I and 1.5 percent for type II devices.

4.6.2 Speed Error

When tested in accordance with section 5.6.2, the speed error of the recorder/reproducer shall not exceed ± 0.5 percent for type I and ± 1.5 percent for type II devices.

4.6.3 Drift

When tested in accordance with section 5.6.3, the drift of the recorder/reproducer shall not exceed 0.5 percent for type I and 2 percent for type II devices.

4.7 Battery Service Life

When tested in accordance with section 5.7, the service life of the recorder battery or batteries shall be sufficiently long to provide a recording time equal to at least twice the minimum required by section 4.2, i.e., 4 h for type I and 3 h for type II devices, without a degradation in MSR performance.

5. TEST METHODS

All test procedures involve (1) magnetic recording of a test tape (sec. 5.3) using the recorder portion of the MSR system under test, and (2) playing back this recorded tape on the playback portion of the same system. It is preferable that the tape first be recorded, then rewound and subsequently reproduced. On a system with separate recording and reproducing heads, and if the latter are in contact with the tape at all times, it shall be acceptable to reproduce the tape immediately after recording (without intermediate rewinding) providing this practice produces similar measurement results. For testing at environmental extremes, step (1) above is done with the recorder in an environmental chamber.

If the playback portion of the system has more than one set of output terminals (sec. 3.15), the test measurements may be performed at the most convenient terminals, except for the frequency response test (sec. 5.5.6) which shall be repeated at *all* playback output terminals.

5.1 Standard Test Conditions

Allow all measurement equipment to warm up until it has achieved sufficient stability to perform the tests without adding errors due to calibration drift. Check the calibration of all equipment after warm-up and prior to testing. Recheck calibration at the conclusion of the measurements to verify that no drift has occurred that would affect the accuracy of the results. Unless otherwise specified, perform all measurements under the following standard test conditions.

5.1.1 Standard Temperature

Standard ambient temperature shall be between 18 and 28 °C (64 and 82 °F).

5.1.2 Standard Relative Humidity

Standard ambient relative humidity shall be between 20 and 70 percent.

5.1.3 Standard Supply Voltages

5.1.3.1 Recorder Supply Voltage

Unless otherwise specified, recordings should be made using either (1) fresh batteries of the size and type specified by the manufacturer (use alkaline cells if battery type is not specified), or (2) an electronic dc power supply. If an electronic power supply is used, it shall be adjusted to between plus zero and minus two percent of the specified nominal battery voltage. If batteries are used, they should be checked before each series of tests by subjecting them to the nominal current drain[1] of the equipment under test. If the battery voltage drops to a value more than 15 percent below its nominal value, repeat portions of the last test with fresh batteries installed to see if significant changes in results occur. Exceptions to this rule are noted in the test procedures.

5.1.3.2 Playback Unit Supply Voltage

For a playback unit powered by batteries, the specifications are identical to those of the preceding section. For a playback unit powered by ac line voltage or offering a choice between line voltage and battery power, the unit shall be supplied with line voltage between 115 and 120 V rms at a frequency of 60 Hz ± 0.5 percent as measured over a 10-s average.

5.1.4 Standard Reference Frequency

The standard reference frequency shall be 315 Hz for type I and 500 Hz for type II devices.

5.1.5 Standard Load Impedance

Each playback output terminal at which measurements are being made shall be terminated with a load as specified by the manufacturer. All equipment connected to this terminal must have an input impedance at least two orders of magnitude greater than the specified load impedance. If no load impedance is specified by

[1] If nominal current is not specified, use a value of 150 mA.

the manufacturer, use the values described below.

a. For each playback output whose primary function is to deliver signal voltage to a subsequent device, use a load consisting of a 10 kΩ ±5 percent resistor in parallel with a 1000 pF ±5 percent capacitor.
b. For each playback output whose primary function is to deliver signal power to a loudspeaker, use a load of 8 Ω making sure the reactive component does not exceed 10 percent at any frequency up to five times the highest test frequency, and that it can dissipate the full output from the channel while maintaining the load resistance within 1 percent of the rated value.
c. For each playback output whose primary function is to deliver signal power to a headset, use a load of 50 Ω.

5.1.6 Standard Source Impedance

The source impedance of equipment connected to the microphone input terminals shall be between 50 and 100 Ω resistive.

5.1.7 Standard Recorder Control Settings

All recorder control settings shall be made before a test recording begins. If adjustment is required during the test, the complete test recording must be repeated using the new control setting. If the recorder is capable of voice-activated recording, this feature shall be disabled prior to testing. If the recorder provides a choice of record input sensitivity ranges, the highest sensitivity range shall be used. If the recorder provides a choice of tape speeds, the recorder shall be tested at each speed which results in a recording time that exceeds the minimum required (sec. 4.2). Since the length of the tape being recorded also affects recording time, see section 5.3 for test tape selection and recording information.

5.1.7.1 Microphone Input Recording Level Control

If a microphone input recording level control is provided, it shall be set at maximum gain or at the detent position producing maximum gain if such a detent position is provided.

5.1.7.2 Bias and Equalization Control

User-accessible controls whose primary function is the adjustment of bias and/or equalization shall be set in accordance with the recorder manufacturer's recommendation for the tape formulation in use.

5.1.8 Standard Playback Control Settings

All playback control settings shall be made before playback and subsequent data taking begins. If adjustment is required during the test, playback and data taking must be repeated.

5.1.8.1 Output Level Control

If an output level control is provided and a detent or preferred setting indicated, the control shall be set to the detent or preferred position. If no detent or indication of preferred setting is provided, the output level control shall be set to maximum provided that such setting does not cause the output electronics to clip at a recorded level corresponding to tape saturation (sec. 5.5.3). If the maximum setting of the output level control causes the output electronics to clip at a recorded level corresponding to tape saturation, the output level control shall be reduced to a setting that does not result in clipping. The playback output level control shall not be reduced by more than two-thirds of its range, however. Use the resulting position as the standard setting, even if this amount of adjustment still does not provide a tape saturation level signal that is free from clipping, and note the deficiency.

If a maximum or detent position of the output level control setting is not used, provision must be made so that a specific intermediate control position can be repeated. This shall be done by reproducing a tape which is recorded with the reference level (sec. 5.5.2) and measuring the rms output voltage resulting from the output level control in its new position. To repeat the intermediate control position, replay the reference level tape and adjust the output level control until the rms output voltage equals the value measured previously.

5.1.8.2 Output Balance Control

If an output balance control is provided, it shall be set to the normal position as indicated by markings.

5.1.8.3 Frequency Response Control

All controls whose primary function is the adjustment of frequency response shall be switched out, if possible, or shall be set for the flattest possible frequency response.

5.1.8.4 Azimuth Alignment Control

User-accessible controls whose primary function is the adjustment of azimuth alignment shall be set in accordance with the recorder manufacturer's recommendation. If no recommendations are given, adjust the control for maximum playback output while reproducing a tape recorded with a 3.15-kHz sine wave, e.g., the tape transport test tape described in section 5.6.

5.1.8.5 Tape Speed Control

User-accessible controls whose primary function is the vernier adjustment of tape speed shall be set to the normal position as indicated by markings.

5.1.9 Noise Reduction or Compression/Expansion Control Settings

Unless otherwise stated, all measurements shall be made with noise reduction or compression/expansion control setting in both the on and off positions. If more than one on position is provided, follow the manufacturers instructions for selecting a position which results in the least degradation to other parameters such as distortion or frequency response. If no instructions are given or the choice is left up to the user, select maximum noise reduction or maximum compression/expansion positions. All tests with noise reduction or compression/ expansion activated shall then be performed at this position.

If the position of the controls does not affect the recording process (a condition certain to occur if the controls are located on a separate playback unit), a single recording can be made and playback output measurements obtained with the controls first in one position and then the other.

If the control position does affect the recording process, two recordings must be made, first with the controls in one position for both recording and reproducing and then in the other position for both recording and reproducing. Separate tapes are not necessary; however, test personnel must note what position the controls are in for a particular section of tape.

5.1.10 Microphone Simulators

The manufacturer of a recorder/reproducer may intentionally roll-off or enhance portions of the frequency response of the device to counterbalance a non-flat response from the microphone, particularly if a specific microphone is suggested for use with the MSR. This same manufacturer may then furnish a microphone simulator or interface which serves to electronically duplicate the response of the microphone. The output of the simulator is plugged into the microphone input terminals of the recorder and the test signals are fed to the simulator input terminals. This simulator may require input voltages that are higher than those required when using the direct microphone input in order to produce the same recorded level on the tape.

If a microphone simulator is furnished, it shall be used only when determining the frequency response for the recorder/reproducers. Do not use it for other measurements. The simulator input voltage needed to produce reference recorded level on the tape may be determined using the test setup of figure 1. Do not rely on the manufacturers specification. First, it is necessary to determine recorder microphone input sensitivity (sec. 5.5.2). Then connect the simulator as shown in the test setup, with its output loaded by the recorder microphone input. Place the recorder in the record mode. Apply standard reference frequency to the simulator input terminals and adjust the sine-wave generator output voltage, V_1, until the simulator output voltage, V_2, equals the microphone input sensitivity of the recorder. V_1 measured after this adjustment is the simulator input voltage necessary to produce reference recorded level on the tape and can be referred to as the simulator microphone input sensitivity.

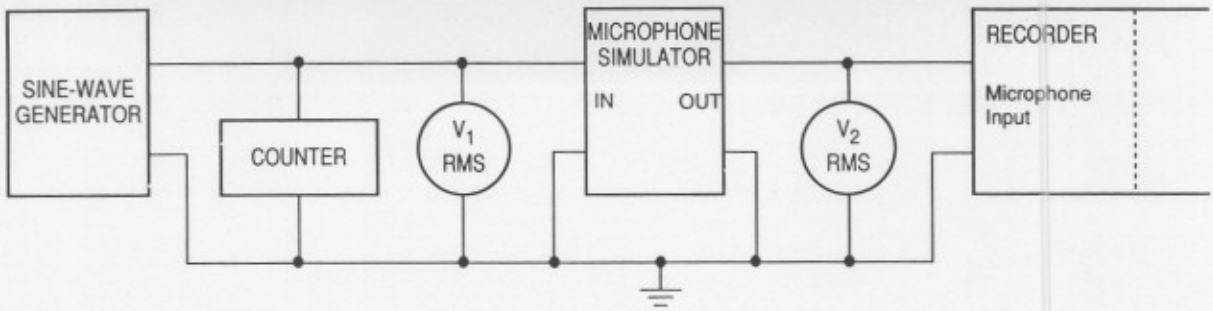

FIGURE 1. *Block diagram for microphone simulator input voltage measurement necessary to produce the reference recorded level.*

5.2 Test Equipment

The test equipment discussed in this section is that equipment which is the most critical in making the measurements required by this standard. All other test equipment shall be of comparable quality. Each piece of test equipment shall have been calibrated with accuracy traceable to a recognized standard.

5.2.1 Audiofrequency Sine-Wave Generator

The audiofrequency generator shall have a frequency range of at least 125 Hz to 10 kHz with an output impedance of 50 Ω. Frequency stability over a 3-h period shall be ±0.1 percent or better and total harmonic distortion shall be ±0.1 percent or less. The generator output voltage shall be adjustable over a range from at least 1 mV to 3 V rms. A low value of 0.1 mV rms is preferable but this can be obtained with an external attenuator if necessary. The variation in output amplitude with frequency shall not exceed ±0.1 dB with respect to its value at 1000 Hz, over the frequency range stated above.

5.2.2 Frequency Counter

The frequency counter shall be capable of measuring frequencies between 125 Hz and 10 kHz with at least five-digit resolution (four-digit resolution is acceptable below 300 Hz) and have a maximum error of ±0.01 percent. Gate time shall be adjustable up to at least 10 s and sensitivity shall be adjustable down to at least 10 mV rms for a sine wave. Note that if a frequency counter is not incorporated into the sine-wave generator (sec. 5.2.1), two counters of the type just described may be needed.

5.2.3 True rms Voltmeters

Two voltmeters of the type described below are required. The voltmeter shall provide a true rms measure of ac voltages from 50 μV to 10 V over a frequency range of 40 Hz to 10 kHz. It shall have a crest factor of at least 3 to 1 and provide 1-yr accuracy of at least: (1) ±2 percent for voltages above 50 mV, (2) ±4 percent for voltages between 300 μV and 50 mV, and (3) ±10 percent for voltages between 50 and 300 μV. Its input impedance shall be at least 100 kΩ. Note that if an rms voltmeter with the capabilities just described is incorporated into the sine-wave generator (sec. 5.2.1), only one additional voltmeter may be required.

5.2.4 A-Weighted Noise-Measurement Device

The A-weighted noise-measurement device shall be a true rms voltmeter (sec. 5.2.3) which incorporates the frequency selective characteristics of a sound-level meter, A-scale, in accordance with ANSI Standard S1.4 [1].[2] The frequency selective network shall have unity gain at 1000 Hz, be down 10 dB at 220 Hz and down 20 dB at 94 Hz. Reference is made to IEC Publication 651 [2].

5.2.5 Spectrum Analyzer

The spectrum analyzer shall have a frequency range from at least 50 Hz to 20 kHz with an input impedance of at least 1 MΩ and a variable persistence storage display. It shall be able to resolve signals that

[2] Numbers in brackets refer to references in appendix A.

are 100 Hz apart at 60 dB below the the maximum signal amplitude. It shall provide both linear and logarithmic (log) displays in the vertical mode. The vertical log display shall have at least two selectable sensitivities, one of which is 10 dB per division and the other of which is either 1 or 2 dB per division. The range of the 10 dB-per-division display shall be at least 80 dB. The analyzer shall accept full-scale inputs between 0.1 mV and 10 V rms. The relative accuracy of the 10 dB-per-division log display over the frequency range given above shall be ±1 dB or better. The amplitude reference level of the display shall be capable of being calibrated for an absolute accuracy of ±1 dB on the 10 dB-per-division log scale and ±3 percent on the linear scale.

5.2.6 Oscilloscope

The oscilloscope shall have a variable persistence storage display and a frequency range from dc to at least 20 kHz. It shall have an input impedance of at least 1 MΩ and an input sensitivity variable between at least 5 mV and 5 V per division. The display shall be capable of being triggered by abrupt changes in input voltage level. The sweep time calibration shall be accurate to within 2 percent between sweep times of 1 ms and 0.5 s per division.

5.2.7 Flutter Meter

The flutter meter shall have the characteristics of a weighted peak flutter meter in accordance with ANSI Standard S4.3 [3]. Reference is made to IEC Publication 386 [4].

5.2.8 Attenuator

The attenuator shall have 50 Ω input and output impedances and a frequency range from dc to at least 50 kHz, with an insertion loss less than 0.1 dB over that range. It shall be capable of at least 60-dB attenuation in 1-dB steps. Steps from 1 to 10 dB shall be accurate to at least ±0.1 dB. Any 20-dB steps shall be accurate to ±0.2 dB and 30-dB steps to ±0.3 dB.

5.2.9 Environmental Chamber(s)

The environmental chamber or chambers shall be capable of providing air temperatures over a range of at least 5 to 45 °C (41 to 113 °F) and relative humidities up to at least 90 percent at 40 °C (104 °F). During tests, the item under test shall be shielded from air currents flowing directly from heating or cooling elements in the chamber. The temperature of the test item shall be measured by an instrument that is separate from the sensor used to control the chamber air temperature. Likewise, humidity shall be measured with a hygrometer that is separate from the sensor used to control humidity.

5.3 Test Tapes

The tests shall be made using new tape of the type and length recommended by the recorder manufacturer. If a choice of recorder speed is offered, the tapes shall be recorded at the slowest available speed, unless otherwise indicated by the manufacturer. The choice of tape length and recorder speed must produce a recording time in excess of the minimum requirement. There shall be no recording over erasures. The length and type of tape used and the recorder speed should be noted for each test.

Standard test tapes, recorded at a known level and frequency, are often used to check the characteristics of open reel and standard size cassette recorders/reproducers. These tapes are generally not available in the format used by most miniature surveillance recorders, however. For this standard, the test tapes are produced by recording a signal of known quantity, as specified in the test procedures, using the recorder portion of the unit under test. The tape is then rewound and measurements made of the reproduction. The reference recorded level for the tape must be determined experimentally as described in section 5.5.2.

If possible, all recordings designed to test the electronics portion of the MSR device at a given environmental condition should be confined to a single unit of tape (microcassette, reel, etc.). Use a second test tape to test the tape transport characteristics (sec. 5.6), and a third similar test tape for the battery service life test (sec. 5.7). Three tape units will thus be recorded for each environmental condition.

5.4 Test Sequence

Perform tests 5.5.1 and 5.5.2 first. Then perform tests 5.5.3 through 5.5.6 at standard temperature and humidity in the order specified. The other tests may then be performed in any sequence desired. If acceptance

tests are being conducted, it is suggested that the environmental tests (sec. 5.8) might be conducted before tests at ambient temperatures.

5.5 Electronic Tests

See section 5.3 for information on recorder speed and on the type and length of tape to use.

5.5.1 Preliminary Test for Output Clipping

The purpose of this measurement is to reduce the possibility that repeat tests will be required due to clipping at the playback output terminals. Both recorder and playback control settings must remain fixed throughout certain of the electronic tests. If output clipping occurs before tape saturation is reached, the output level control must be reduced and prior measurements repeated.

The tape that will be used for the electronic tests shall be recorded with both the standard reference frequency and a frequency of 1 kHz, one after the other, at an input level 10 dB higher than the microphone input sensitivity specified by the MSR manufacturer for the type of tape being used. If the microphone input sensitivity is not specified, proceed to section 5.5.2. If more than one input channel is present, the recording shall be made simultaneously on all channels.

If output clipping is evident on any channel when reproducing the above recorded tape, the playback output level control for that channel must be reduced as noted in section 5.1.8.1 and shall remain in that position for subsequent tests.

5.5.2 Reference Recorded Level, Microphone Input Sensitivity, and Output Level Determination

If microphone input sensitivity is specified by the manufacturer, the reference recorded level (RRL) may be determined by reproducing a tape that has been recorded with the specified voltage applied at the microphone input terminals and measuring the playback output voltage. The measurements described in this section provide the required independent determination of RRL, microphone input sensitivity, and output level, together with information necessary to determine weighted signal-to-noise ratio and harmonic distortion.

Refer to figure 2 for a block diagram of the test setup. If the standard output level control position has been modified by the measurements of section 5.5.1, place it in the correct position. Any noise reduction or compression/expansion system utilized by the MSR must be in the on position during the determination of the RRL and related microphone input sensitivity. If more than one on position is provided, follow the procedure in section 5.1.9. If more than one input channel is provided, make a separate recording for each channel. Complete one channel before starting the second, however, as information gained from the first channel will simplify the procedure for the second channel.

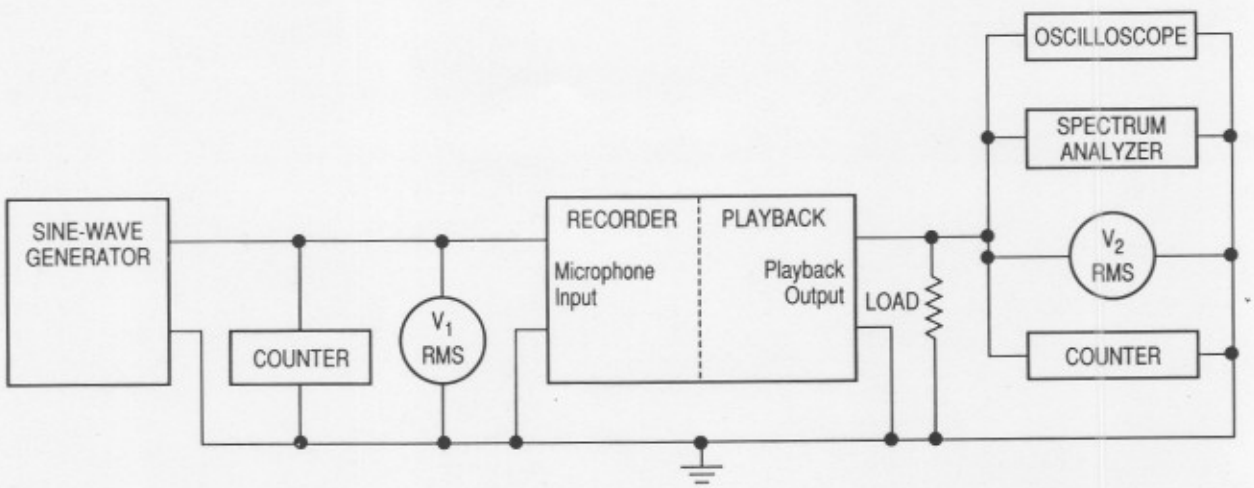

FIGURE 2. *Block diagram for all electronic test measurements except those of sections 5.5.5 and 5.5.12. Each test does not necessarily require all of the test equipment shown.*

Load the tape (sec. 5.3) that will be used for the electronic tests into the recorder. Then apply the standard reference frequency to the microphone input terminals of the recorder at a convenient voltage V_1, which is between 50 and 60 dB lower than the microphone input sensitivity specified by the manufacturer for

type I devices, and between 30 and 40 dB lower for type II devices. If microphone sensitivity is not specified, apply 0.1 mV rms for either type of device. Record this signal for a sufficient length of time to allow measurement at the playback output, when the tape is reproduced, of (1) rms voltage, V_2, (2) second harmonic distortion, (3) third harmonic distortion, and (4) total harmonic distortion.[3] Increase the microphone input voltage in steps of 10 dB until 3 dB below the specified microphone input sensitivity level, and then in steps of 3 dB until 12 dB above the specified microphone input sensitivity, recording the signal as specified above at each input level. If microphone input sensitivity is not specified, increase the initial 0.1 mV rms input in 10 dB steps up to a 10 mV rms input.

Rewind and play back the recorded tape, measuring (at the playback output) the (1) rms voltage, V_2, (2) second harmonic distortion, (3) third harmonic distortion, and (4) total harmonic distortion for each input. Plot items (1) and (3) vs. input voltage and determine the RRL as defined in section 3.16. The rms output voltage that is measured while reproducing the RRL under standard test conditions is designated as the output level for the playback unit. The microphone input voltage that produced this output is defined as the microphone input sensitivity.

The input voltages designated above may not be sufficient in number to properly determine the RRL, particularly if no microphone input sensitivity level has been specified by the manufacturer, but the resulting plot will indicate what additional microphone input voltages may need to be recorded and reproduced. If output clipping is evident on any channel when reproducing the above recorded tape, the output level control for that channel may have to be reduced and the playback measurements of this section repeated. Change in the output level control will be necessary if clipping occurs before the tape saturation level is reached. See section 5.5.3.

5.5.3 Maximum Recorded Level, Tape Saturation Level, and Microphone Maximum Input Determinations

The measurements described in this test procedure are an extension of those in section 5.5.2. In addition to determining maximum recorded level (MRL), tape saturation level (TSL), and microphone maximum input, they also provide a portion of the information necessary to determine dynamic range (sec. 5.5.9).

Sufficient information may already have been obtained from the measurements of section 5.5.2 to determine the MRL and TSL as defined in section 3. If not, use the same test setup (fig. 2) and apply the standard reference frequency to the microphone input terminals of the recorder at a level equal to the microphone input sensitivity as determined in section 5.5.2. Change this level in steps of 2 dB until 14 dB above the aforementioned input voltage, recording each signal for a sufficient length of time to allow measurement at the playback output, when the tape is reproduced, of rms voltage plus second, third, and total harmonic distortion. Any noise reduction or compression/expansion system must be set as specified in section 5.5.2. Make a separate recording for each channel if more than one channel is provided.

Rewind and play back the recorded tape, measuring rms voltage plus second, third, and total harmonic distortion at the playback output. Plot third harmonic distortion and total harmonic distortion vs. input voltage. Determine the MRL and TSL. The microphone input voltage which produces TSL is the microphone maximum input. If output clipping is evident on any channel before the tape saturation level is reached, the output level control for that channel must be reduced as noted in section 5.1.8.1 and the playback measurements of this section repeated.

5.5.4 Clipping Level Determination

No clipping level specification is required if the TSL can be reached without reducing the playback output level control from its maximum or detent position as described in section 5.1.8.1. If this is not possible and output clipping has been noted for one of the previously recorded tapes, reproduce the tape over the area where clipping occurred. Since the clipping level is a function of the output electronics, adjust the playback output level control to provide the maximum sine-wave signal which, when viewed on an oscilloscope connected to the playback output terminals, shows no visible signs of clipping, flat-topping or other indications of distortion to the trained observer. The rms output voltage under this condition is the clipping level.

[3] Use the spectrum analyzer to determine harmonic distortion by comparing the fundamental amplitude to the amplitude of each harmonic on a relative basis. The percentage distortion for each harmonic is the level of the harmonic divided by the level of the fundamental multiplied by 100. Total harmonic distortion is the square root of the sum of the individual percentages. Harmonics more than 10 dB below the largest harmonic can be disregarded.

5.5.5 A-Weighted Output Noise Voltage Measurement

This measurement provides information used in determining the signal-to-noise ratio of the MSR. Refer to figure 3 for a block diagram of the test setup. Record a section of tape with bias applied to the recording head and with the recorder microphone input terminated in a source impedance of 100 Ω ±10 percent resistive. If more than one input channel is provided, make a separate recording for each channel. Rewind and play back the recorded tape. With the output level control in the same position as in section 5.5.2, measure the playback rms output voltage with an A-weighted noise measurement device (sec. 5.2.4). If a noise reduction or compression/expansion system is provided, make the measurements with the system both on and off.

To smooth out random short-term variations in the rms output noise voltage, take an average reading over an approximate 10-s interval. If the measuring instrument cannot do this, a similar result can be achieved by observing a minimum and a maximum over an approximate 10-s period and recording the average of these readings.

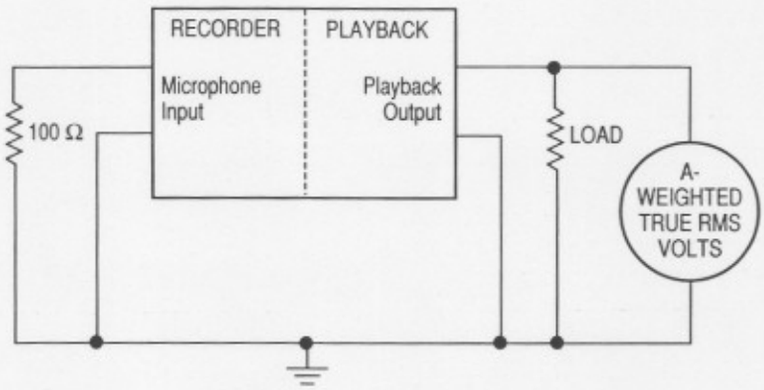

FIGURE 3. *Block diagram for A-weighted output noise voltage measurement.*

5.5.6 Frequency Response Test

This test is a measurement of playback output voltage vs. frequency obtained by reproducing a tape that has been recorded with different frequencies at a constant microphone input voltage. If the recorder/reproducer has more than one channel, make the measurement for each channel, with the frequency response determined by the results for the least uniform channel. The test signal may be applied to all channels simultaneously. If the recorder/reproducer incorporates a noise reduction or compression/expansion system, make the measurements with the system both on and off (sec. 5.1.9). If the reproducer has more than one set of playback output terminals, make the measurements at each output.

Refer to figure 2 for a block diagram of the test setup. Set the signal generator to a frequency of 125 Hz and apply a signal which is 20 dB less than the microphone input sensitivity as determined in section 5.5.2. Measure this voltage with voltmeter V_1. Record this signal for a sufficient length of time to allow measurement of the playback output rms voltage when the tape is reproduced. Repeat this procedure for all of the frequencies listed in table 3 up to and including the frequency at which the output voltage is at least 10 dB less than its value at the standard reference frequency. This upper frequency is likely to be 6.3 or 8.0 kHz for type I and 4 kHz for type II devices. Rewind and play back the recorded tape. Observe the playback output signal on the oscilloscope and measure the rms voltage, V_2, at each frequency. Do this first for one channel and then

TABLE 3. *Preferred frequencies for frequency response test* [5]

100 Hz	500 Hz	2500 Hz
125	630	3150
160	800	4000
200	1000	5000
250	1250	6300
315	1600	8000
400	2000	10000

the next, if necessary. The output level control must remain in the same position for all measurements on one channel. Plot output amplitude vs. frequency. If there is more than one set of playback output terminals, repeat the rewind, playback and measurement of the recorded tape, as described above, at each set of output terminals.

Repeat the above procedure using a microphone input signal, V_1, equal in amplitude to the microphone input sensitivity. This time, measure total harmonic distortion (THD) at the output in addition to the rms output voltage. Save the THD results for use in section 5.5.8. If output clipping should occur upon playback for any frequency, reduce the output level control sufficiently so that there are no signs of clipping when viewing the signal on the oscilloscope. Then replay the recorded tape and make all measurements with the new output level control setting.

5.5.7 Weighted Signal-to-Noise Ratio Test

Weighted signal-to-noise (S/N) ratio is specified for two different frequencies, one being the standard reference frequency and the other being 1 kHz. If more than one channel is provided, calculate the weighted S/N ratio for each channel, with the lowest values obtained at each frequency being the values sought. If the MSR system under test incorporates optional noise reduction or compression/expansion, determine the weighted S/N ratio with the option on (sec. 5.1.9).

To obtain the S/N ratio at reference frequency, divide the playback output rms voltage measured while reproducing a tape recorded with an input equal to the microphone input sensitivity (sec. 5.5.2) by the rms output noise voltage measured under the same standard test conditions (sec. 5.5.5).

Use a similar procedure to obtain the S/N ratio at 1 kHz. The playback output rms voltage at 1 kHz (resulting from reproducing a tape recorded with an input equal to the microphone input sensitivity) was measured during the frequency response tests of section 5.5.6. This value cannot be used directly, however, because the output level control may have been in a different position than it was when the output noise voltage was measured. Instead, from the measurements of section 5.5.6, determine the difference in decibels between the playback output rms voltage at reference frequency and at 1 kHz. If the value at 1 kHz is higher, add the difference in decibels to the S/N ratio at reference frequency to obtain the S/N ratio at 1 kHz. Subtract the difference if the value at 1 kHz is lower.

5.5.8 Total Harmonic Distortion Test

Measure total harmonic distortion (THD) at the RRL for the standard reference frequency and 1 kHz. If more than one channel is provided, measure the THD for each channel, with the highest values obtained at each frequency being the values sought. If the MSR system incorporates optional noise reduction or compression/expansion, the THD shall be determined both with the option on and off, with the highest values obtained again being the values sought.

Both the standard reference frequency and 1-kHz THD values were determined during the measurements of frequency response at the RRL (sec. 5.5.6) with the microphone input voltage equal to the microphone input sensitivity. The standard reference frequency THD was also determined (sec. 5.5.2) for the condition where any noise reduction or compression/expansion system is in the on position.[4]

5.5.9 Dynamic Range Test

If more than one channel is provided, calculate the dynamic range (sec. 3.7) for each channel with the lowest value obtained being the value sought. For those MSR systems that utilize an optional noise reduction or compression/expansion system, determine the dynamic range with the option on.

The input level that produces the MRL was determined previously (sec. 5.5.3). The input level that produces a playback output 10 dB higher than the weighted noise voltage may be determined by extending the plot of playback output rms voltage vs. recorded rms input voltage (sec. 5.5.2). Enough points must be available in the lower linear position of the plot to allow extrapolation down to an input voltage that produces an output only 10 dB larger than the weighted output noise level.

---

[4] A repeat measurement of the same section of tape with the noise reduction or compression/expansion system off will provide information needed for this condition, provided that the recording process is not affected by whether the system is on or off. See section 5.1.9 for further information. If the recording process is affected, a separate recording of the reference level (sec. 5.5.2) must be made with the noise reduction or compression/expansion system turned off. Rewind and reproduce this section of tape to obtain the information needed.

5.5.10 Crosstalk Test

Using the test setup of figure 2, and with any optional noise-reduction or compression/expansion system activated, set the signal generator to provide a voltage, V_1, equal to the microphone input sensitivity at the standard reference frequency. Record this signal, as specified below, for a sufficient length of time to allow measurement of output voltage, V_2, for all tracks. Repeat this procedure for 1 and 3.15 kHz.

For the monophonic format with two tracks, i.e., side A and side B, record the tape on side A and then reproduce side A, measuring the output voltage. Turn over the tape unit to reproduce side B, and again measure the output voltage. The ratio of the voltage measured when reproducing side A to the voltage measured when reproducing side B, in decibels, is the crosstalk at that frequency.

A two-track stereo format (two channels of information recorded in a single direction only) does not need to be rated for crosstalk. For the stereo format with four tracks (two stereophonically-related channels of information recorded in each of two directions), record the tape on side A and then reproduce side A. Measure the voltage at the left and right output terminals separately. Turn over the tape unit and reproduce side B. Measure the voltage at the left and right output terminals separately. Calculate the ratios, in decibels, of the left-channel voltage measured when reproducing side A to the left- and right-channel voltages measured when reproducing side B for each frequency. Then calculate the ratios, in decibels, of the right-channel voltage measured when reproducing side A to the left- and right-channel voltages measured when reproducing side B for each frequency. The least of the four ratios calculated at each frequency is the value sought.

It is recommended that a spectrum or wave analyzer be used to measure the output voltage when reproducing side B to ensure accuracy of measurement in the presence of noise.

5.5.11 Stereo Separation Test

Using the test setup of figure 2, adjust the sine-wave input signal level so that measurement accuracy is not affected by either tape saturation or noise at the frequency in use. Once set, the input signal level must remain constant for all tests. Record two sections of tape for each pair of stereo channels. Bias must be applied to each channel and the control settings must be the same.

First, terminate the right-channel microphone input in 100 Ω and apply the signal to the left-channel microphone input only, making a recording at the standard reference frequency, at 1 kHz and at 3.15 kHz. Designate this section of tape the left-track test tape. Next, terminate the left-channel microphone input in 100 Ω and apply signal to the right-channel microphone input only, making a recording at the same three frequencies. Designate this section of tape the right-track test tape.

Rewind the tapes. For each stereo-separation measurement, reproduce the left track test tape, and measure the left- and right-channel output levels separately. Reproduce the right-track test tape, and measure the left- and right-channel output levels separately. Compute the ratio, in decibels, of the left-channel output level when the left-track test tape is reproduced to the left-channel output level when the right-track test tape is reproduced for each frequency. Compute the ratio, in decibels, of the right-channel output level when the right-track test tape is reproduced to the right-channel output level when the left-track test tape is reproduced for each frequency. The lesser of the two ratios calculated at each frequency is the value sought.

If the recorder/reproducer is designed to record and reproduce more than one pair of stereo channels, measure the separation for each stereo pair. The separation at each frequency is the least of the ratios calculated at that frequency.

It is recommended that a spectrum or wave analyzer be used to measure unwanted signal level to ensure the accuracy of measurement in the presence of noise.

5.5.12 Automatic Level Control Attack and Release Times Test

Connect the test equipment as shown in figure 4. From the plot of playback output voltage vs. microphone input voltage (see sec. 5.5.2), determine the range of input voltages over which the automatic level control (ALC) operates, i.e., the input voltage range over which the output voltage changes very little. Adjust the signal generator to supply the standard reference frequency at a voltage, V_1, equal to the microphone input sensitivity, and set the attenuator for 20 dB. Start recording this voltage. Do not stop recording until the instructions so indicate. After approximately 1 min, change the attenuator to produce 0-dB attenuation. (All changes in attenuation must occur instantaneously, i.e., if two or more switches are required to accomplish the indicated change, they must be switched at the same instant.) After approximately another minute, change the attenuation back to 20 dB. (As noted above, the input signal is being continuously recorded during the changes in its amplitude.)

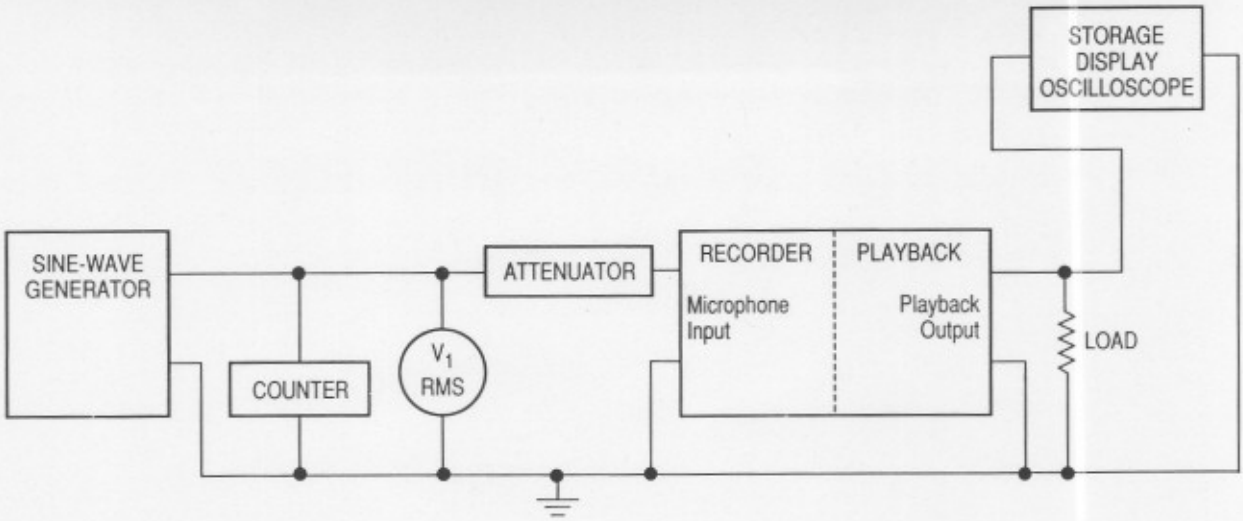

FIGURE 4. *Block diagram for the ALC attack and release times measurement.*

If the range of input voltage over which the ALC operates extends to at least 30 dB below the microphone input sensitivity, continue with the instructions in this paragraph. If not, skip to the next paragraph. While still recording, switch the attenuator to 40-dB attenuation and then back to 20-dB attenuation, leaving the attenuator at each position for approximately 1 min.

Stop the recording and rewind the tape to the location where the recording began. Reproduce the recorded portion on the playback unit. Set the oscilloscope for a stored display and adjust it to trigger on either an abrupt positive or negative change in recorded amplitude, depending upon what section of the tape is being reproduced. For each change, measure the time required for the recorded amplitude to return to within 3 dB of its value before the change.

Taken in the order recorded, the first and fourth changes produce a sudden increase in recorded voltage and the measured time is the ALC attack time. The second and third changes produce a sudden decrease in recorded voltage and the measured time is the ALC release time. The largest value measured for each is the value sought. Note that the third and fourth changes are present only if the input voltage range over which the ALC operates extends to at least 30 dB below the microphone input sensitivity.

5.6 Tape Transport Tests

Record two identical test tapes as described below. Use the first for all tape transport tests, and the second for the battery service life test (sec. 5.7). See section 5.3 for information on recorder speed and on the type and length of tape to use.

Install fully-charged batteries of the type specified by the manufacturer into the recorder. Using the test setup of figure 5, record a constant frequency signal of either 3 or 3.15 kHz over the complete length of the test tape in one direction (e.g., over the total length of side A if the tape unit is a microcassette) at an input voltage equal to the microphone input sensitivity. Record the signal over the complete width of the tape in that direction (e.g., if side A has room for two channels, record the signal on both channels). Ensure that the signal from the generator does not vary in frequency more than ± 0.1 percent during the recording process. Designate the tape so recorded as the tape transport test tape. Following this, record a second tape of the same type and length using the same procedures as above. *Do not* replace the recorder batteries. Use the same batteries that were installed before the first recording began. Designate this tape as the battery service life test tape. Then proceed with the following tests.

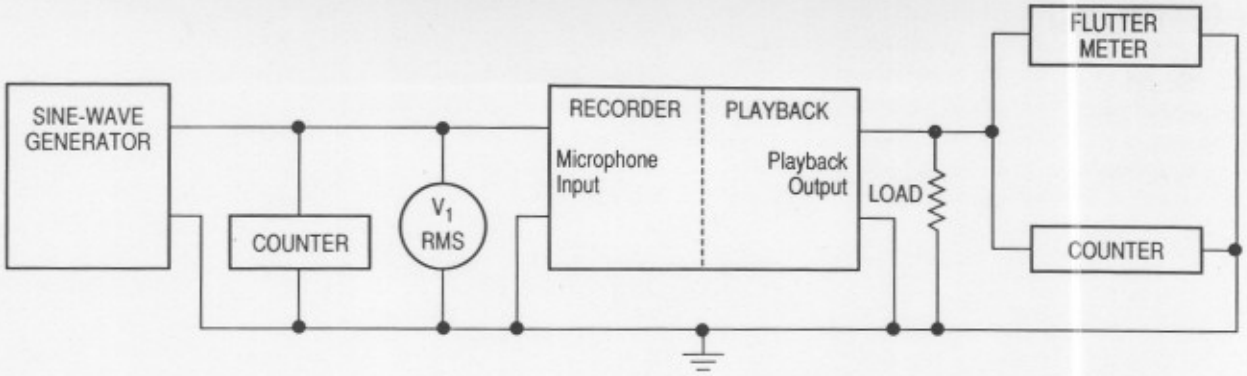

FIGURE 5. *Block diagram for the tape transport and battery service life measurements.*

5.6.1 Weighted Peak Flutter Test

Rewind and then reproduce the tape transport test tape (sec. 5.6) on the playback portion of the MSR device. Measure the weighted peak flutter with a device fulfilling the requirements of section 5.2.7 and connected as shown in figure 5.

Each measurement of flutter shall commence no sooner than 10 or later than 20 s after the initiation of motion. Continue each measurement for a period of 60 ±5 s. The maximum value of flutter observed in this period shall be the flutter measurement except that short-duration maxima that occur no more than twice in the measurement period shall be omitted.

Make flutter measurements at three points on the tape corresponding approximately to the following conditions:

a. Full supply reel, empty take-up reel.
b. Empty supply reel, full take-up reel.
c. Tape equally disposed between the reels.

Rewind the tape, and put the recorder/reproducer into the reproduce mode. In like manner, make flutter measurements at the beginning, middle, and end of tape and tabulate the data. Repeat the rewind/reproduce/measurement cycle a third time, and tabulate the data. Calculate the arithmetic average of the three flutter measurements made at the beginning of the tape. In like manner, calculate the average flutter at the middle of the tape and at the end of the tape. The largest of the flutter averages is the value sought.

5.6.2 Speed Error Test

Measure speed error by rewinding and then reproducing the tape transport test tape (sec. 5.6) on the playback portion of the MSR device, measuring the frequency of the signal at the playback output. In terms of frequency, speed error is given by:

$$\text{Speed Error in Percent} = (f_a - f_c)/f_c \times 100$$

where

f_a is the measured frequency
f_c is the correct frequency.

Measure the frequency with the frequency counter (sec. 5.2.2), using a 10-s gate to improve the accuracy of measurement.

The measurement of speed error shall commence no sooner than 20 or later than 30 s after the leading edge of the magnetic tape has passed the playback head. The measurement period shall be no less than 10 or greater than 30 s. The average frequency during the measurement period shall be used in the computation of speed error. Measure speed error every 5 ±1 min until the complete tape has been reproduced. If the equipment is available, speed (or frequency) may be displayed as a function of time on a strip chart recorder.

The largest of the values measured is the value sought.

5.6.3 Drift Test

Drift is determined by calculating the maximum algebraic difference between the speed errors, measured in section 5.6.2, and expressing the result as a percentage of the correct speed.

$$\text{Drift in Percent} = (S_{a_{max}} - S_{a_{min}})/S_c \times 100$$

where

S_a is the measured speed
S_c is the correct speed.

5.7 Battery Service Life Test

If the playback unit requires batteries for power, place fully-charged batteries in the unit. Rewind the battery service life test tape (sec. 5.6) until approximately one-half of the tape length is on the supply reel. Repeat each of the tape transport tests (secs. 5.6.1, 5.6.2, and 5.6.3) on the last half of the battery service life test tape and record the measured values. Compare the values obtained with the minimum requirements specified in section 4.6.

5.8 Environmental Tests

Conduct the environmental tests by placing the recorder portion of the system (or the complete system if the recorder and the playback unit are not separable) in an environmental chamber while recording the test tapes. For recorders that do not include a remote start/stop feature, perform the recording in the environmental chamber non-stop with all changes of input made as quickly as possible. Keep an accurate record of time vs. type of input so that, upon playback, the various portions of the recorded tape can be located relative to the beginning of the tape.

Modify the test procedures of sections 5.5.2 and 5.6 for the environmental tests as follows. For section 5.5.2, there is no need to determine either reference recorded level or microphone input sensitivity again. Use the values determined during ambient temperature tests. Record the test tape with an input equal to the microphone input sensitivity at the standard reference frequency (sec. 5.5.2). Record this signal for a sufficient length of time to allow measurement at the playback output, when the tape is reproduced, of (1) rms voltage, (2) second harmonic distortion, (3) third harmonic distortion, and (4) total harmonic distortion. For section 5.6, record only the tape transport test tape.

5.8.1 Temperature Test

Install fully-charged batteries and load a new unrecorded tape into the recorder. Place the recorder, with the tape transport stopped, in an environmental chamber which has reached equilibrium at the required low temperature ±2 °C (±3.6 °F). After 30 min in the chamber, put the recorder in the record mode. After 5 min in the record mode, begin recording the test tape in accordance with the procedures of sections 5.5.2 (as modified in sec. 5.8 above), 5.5.3, 5.5.5, and 5.5.6. Remove the recorded tape from the chamber and install a second new unrecorded tape plus a new set of fully-charged batteries into the recorder. After 30 min in the chamber with the tape transport stopped, put the recorder in the record mode. After 5 min in the record mode, begin recording the test tape in accordance with the procedures of section 5.6 (as modified in sec. 5.8 above). Remove the recorder and the playback unit (if it was in the chamber) from the chamber. After at least 60 min at standard temperature and humidity, rewind and begin playback of the recorded tapes. Follow the appropriate procedures of sections 5.8, 5.5.2 through 5.5.9, and 5.6 through 5.6.2 to determine performance of the MSR.

Repeat this procedure with the environmental chamber set to within ±2 °C (±3.6 °F) of the required high temperature.

5.8.2 Humidity Test

Install fully-charged batteries and load a new unrecorded tape into the recorder. Place the recorder, with the tape transport stopped, in an environmental chamber which has reached equilibrium at a relative humidity equal to or greater than that required and a temperature within ±2 °C (±3.6 °F) of that required. After at least 8 h in the chamber, put the recorder in the record mode. After 5 min in the record mode, begin recording the test tape in accordance with the procedures of sections 5.5.2 (as modified in sec. 5.8 above),

5.5.3, 5.5.5 and 5.5.6. Then remove the recorded tape from the chamber and install a second new unrecorded tape plus a new set of fully-charged batteries into the recorder. After 30 min in the chamber with the tape transport stopped, put the recorder in the record mode. After 5 min in the record mode, begin recording the test tape in accordance with the procedures of section 5.6 (as modified in sec. 5.8 above). Remove the recorder and the playback unit (if it was in the chamber) from the chamber. After at least 2 h at standard temperature and humidity, rewind and begin playback of the recorded tapes. Follow the appropriate procedures of sections 5.8, 5.5.2 through 5.5.9, and 5.6 through 5.6.2 to determine performance of the MSR.

APPENDIX A—REFERENCES

[1] Specification for sound level meters. ANSI S1.4-1983 (ASA 47-1983). American National Standards Institute, Inc., 1430 Broadway, NY 10018.

[2] Sound level meters. IEC Publication 651–79. First Edition. International Electrotechnical Commission, Central Office, 3 rue de Varembe, 1211 Geneva 20 Switzerland. Available from the American National Standards Institute.

[3] Method for measurement of weighted peak flutter of sound recording and reproducing equipment. ANSI S4.3-1982 (AES 6-1982). American National Standards Institute, Inc., 1430 Broadway, NY 10018.

[4] Method of measurement of speed fluctuations in sound recording and reproducing equipment. IEC Publication 386-72. First Edition. International Electrotechnical Commission, Central Office, 3 rue de Varembe, 1211 Geneva 20 Switzerland. Available from the American National Standards Institute.

[5] Preferred frequencies, frequency levels and band numbers for acoustical measurements. ANSI S1.6-1984 (ASA 53-1984). American National Standards Institute, Inc., 1430 Broadway, NY 10018.

APPENDIX B—BIBLIOGRAPHY

American national standard specifications for dry cells and batteries. ANSI Standard C18.1-1986. American National Standards Institute; 1986 May.

Audio recording and reproducing standards for audio cassette tape systems. NAB Standard E607. The National Association of Broadcasters, 1771 N Street, NW., Washington, DC 20036; 1976.

Ballou, Glenn., ed. Handbook for sound engineers—the new audio cyclopedia. Chapter 24 on Magnetic recording and playback. Indianapolis, IN: Howard W. Sams and Co.; 1987. 933–975.

Batteries for personal/portable transceivers. NILECJ-STD-0211.00. National Institute of Justice, U.S. Department of Justice, Washington, DC 20531; 1975 June.

Batteries used with law enforcement communications equipment: Comparison and performance characteristics. LESP-RPT-0201.00. National Institute of Justice, U.S. Department of Justice, Washington, DC 20531; 1972 May.

Fink, Donald G., ed. Electronics engineer's handbook. 3rd Ed., Chapter 19 on Sound reproduction and recording systems. New York: McGraw-Hill Book Company; 1988. 19-1 to 19-98.

IEEE standard dictionary of electrical and electronic terms. ANSI/IEEE Standard 100-1984. Institute of Electrical and Electronic Engineers, Inc., 345 East 47th St., New York, NY; 1984.

Koenig, Bruce E. Making effective forensic audio tape recordings. FBI Law Enforcement Bulletin; 1987 May.

Magnetic tape recording handbook. Hewlett Packard Application Note 89; 1976 September.

Mantell, Charles. Batteries and energy systems. 2nd Ed., New York: McGraw-Hill Book Company; 1983. 319 p.

Parker, Sybil P., ed. McGraw-Hill dictionary of scientific and technical terms. 3rd Ed., New York: McGraw-Hill Book Co.; 1984.

Spectrum analysis—spectrum analyzer basics. Hewlett-Packard Application Note 150; 1974 April.

Tape recorder measurement standard. ANSI/EIA Standard 518-1986. Electronic Industries Association, 2001 Eye St., NW., Washington, DC 20006; 1986 August.

Wood, Roger W. Magnetic recording systems. Proceedings of the IEEE, **74**, 11, 1557–1568; 1986 November.