A HIGH-TEMPERATURE SUPERCONDUCTING TRANSMISSION LINE FOR CRYOGENIC ELECTRICAL METROLOGY APPLICATIONS*

C. D. Reintsema, J. R. Kinard†, and T. E. Lipe†
National Institute of Standards and Technology
Electromagnetic Technology Division
Boulder, CO 80303, USA

Abstract

This paper describes the design, realization, and testing of a high-temperature superconducting (HTS) transmission line structure for delivering calibrated dc and ac signals to a cryogenic test platform. The inclusion of the HTS transmission line in the signal path reduces parasitic wiring resistance, maintains thermal isolation within the cryostat, and transmits dc through audio frequency signals with minimal loss and degradation.

Introduction

A prototype cryogenic thermal transfer standard (CTTS) has been under investigation at the National Institute of Standards and Technology as a potential ac-dc transfer standard [1, 2] at low signal levels. Most recently, we have retrofitted the cryogenic standard with an HTS transmission line in an effort to improve its performance.

A common problem with electronic cryogenic apparatus is delivering dc and ac signals from the room-temperature reference plane to the low-temperature device. This is of particular concern for the CTTS since the instruments under calibration are necessarily at room temperature.

Since electrical and thermal conductivity scale directly for most metals and alloys, a predicament arises when trying to achieve low electrical resistance in combination with low thermal conductivity. With superconductors, the thermal conductivity below the critical temperature (T_c) can drop dramatically due to the elimination of the electronic contribution to this value. And in terms of the electrical properties in the superconducting state, the dc resistance drops to zero, the current-carrying capacity is high, and the ac transport characteristics are adequate over the frequency range of interest.

We implemented a coplanar transmission line fabricated from high quality crystalline thin-film $YBa_2Cu_3O_x$ (YBCO). YBCO has a critical temperature near 90 K, hence at 77 K it is well into the superconducting state. We use this line to transmit the electrical signal between the 77 K and 4 K stages of our cryostat.

Design

The entire transmission line assembly is shown in a conceptual drawing as Figure 1 and in a photograph as Fig. 2.

The main physical design constraint is low thern conductance of the transmission line structures. T bridge structures are used; one from 300 K (ro temperature) to 77 K, and the second from 77 K to 4 The effective thermal shunt conductances of th structures must be small compared to those of the supp structures within the commercial cryostat assembly. T is achieved by designing high aspect ratio structures these materials and, where possible, using materi having low thermal conductivity at the temperatures operation.

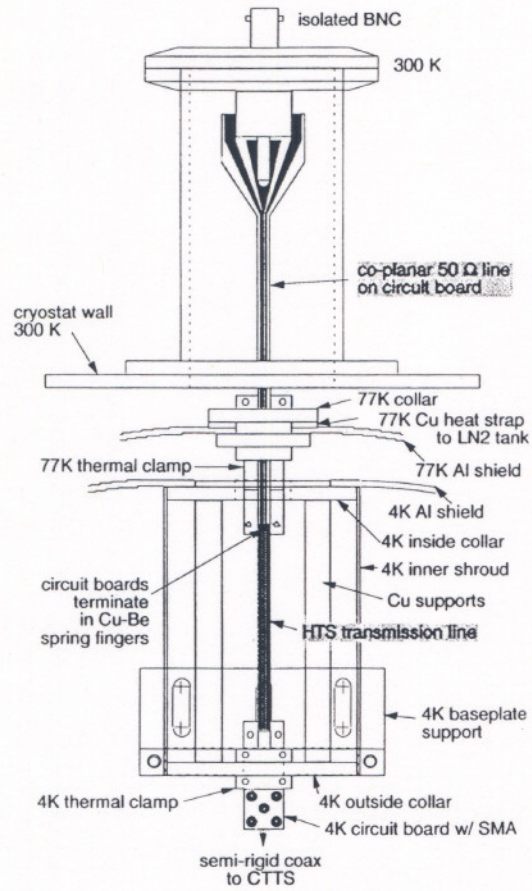

Fig. 1 – Drawing of the HTS transmission line structure and housir as mounted in the CTTS cryostat. The HTS line length 5 cm and the total length of the complete assembly is less th 20 cm.

*Contribution of U.S. Government, not subject to copyright in the United States.

† Electricity Division, Gaithersburg, MD

U.S. Government work not protected by U.S. copyright

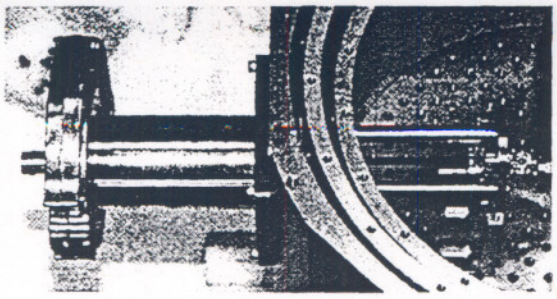

Fig. 2 – A photograph of the HTS transmission line structure and housing. The room temperature BNC is on the left and the 4 K SMA terminus of the HTS transmission line on the far right.

For the 300 K to 77 K bridge, a double-sided circuit board is used. A coplanar transmission line, scaled for a characteristic impedance of 50 Ω, is patterned on the top side. The 300 K end of this is terminated (by soldering) on a vacuum electrical feedthrough. The 77 K end is terminated with Cu-Be spring fingers. The majority of the length of this circuit board is accommodated by a housing that protrudes from the outside of the cryostat, presenting an isolated BNC for making connection to the CTTS. At the 77 K cryostat shield, the circuit board passes through a clamped Cu plug with a heat strap to the 77 K base plate. This assembly effectively cools the signal leads to 77 K.

This circuit board continues to protrude through the 4 K shield into the inner shroud. This inner shroud, which surrounds the HTS structure, is entirely at 4 K, providing a radiation shield for the 4 K cold space. A second circuit board penetrates the end of the shroud through a clamped Cu block effectively cooling the signal leads to 4 K. The end of the board inside the shroud terminates in Cu-Be spring fingers and the opposite end terminates in an SMA connector. As shown in Figs. 1 & 2 the HTS transmission line structure bridges the gap between the circuit boards, completing the signal path.

A set of YBCO transmission line structures was fabricated from a double-sided, YBCO coated, 5 cm diameter lanthanum aluminate substrate. The coplanar transmission line structures were scaled for 50 Ω characteristic impedance. A weak nitric acid wet etch was used to pattern the transmission lines. Gold contact pads were evaporated onto the terminals after a plasma surface-preparation step. The backside YBCO was left intact. With one end at T_{max} = 77 K and the other at T_{min} = 4.2 K, the transmission line was entirely superconducting for all measurements.

A short length of semirigid coaxial line was used between the transmission line terminus and the CTTS.

Performance

The reduction in parasitic wiring resistance was dramatic. At the operating temperature, the round trip resistance from the BNC to 4 K was reduced to 7.84 Ω, 6.91 Ω of which is attributable to the signal heater. This translates to less then an ohm of stray resistance, an improvement of at least a factor of ten over previous versions using twisted pair or semirigid coaxial lines. Thermally, the

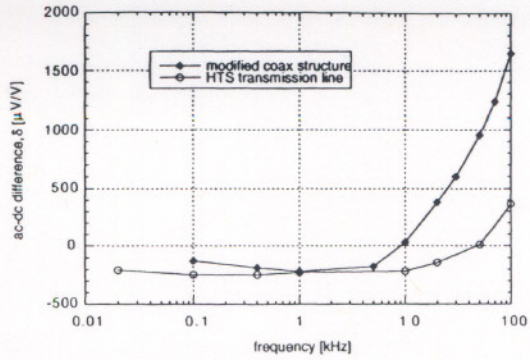

Fig. 3 – CTTS performance improvement; ac-dc difference versus frequency for the previous modified semirigid coax and the new HTS transmission line structures. Error bars have been omitted for clarity; in all cases the type A uncertainty (k=2) was less then 26 μV/V.

performance was also greatly improved. The hold time of the cryostat was increased from around 8 hours to over 24. And the heat load at the CTTS remained well below the 18.2 μW saturation power limit.

As a final indication of the impact of the transmission line, Fig. 3 compares the measured CTTS ac-dc difference δ with a modified coaxial line and with the HTS transmission line (at signal levels of 15 mV and 14 mV respectively). The HTS line shows both reduced δ at higher frequencies and flatter response from 10 Hz to 10 kHz. More detailed performance and analysis of the CTTS incorporating the HTS transmission line is reported in another extended abstract[3].

Conclusion

We have developed a high-temperature superconducting transmission line and demonstrated improved performance with the CTTS by using it as a signal line. Low parasitic resistance, good thermal isolation, and improved ac signal transmission were simultaneously achieved. This type of structure could ultimately be useful in other cryogenic electrical metrology applications, such as the dc and ac Josephson voltage standards.

References

[1] C. D. Reintsema, E. N. Grossman, J. A. Koch, J. R. Kinard, and T. E. Lipe, "Thermal Transfer Measurements at Microwatt Power Levels," CPEM '98 Conference Digest, pp.171, Washington, DC, USA, July 6-10, 1998.

[2] C. D. Reintsema, E. N. Grossman, J. A. Koch, J. R. Kinard, and T. E. Lipe, "AC-DC Transfer at Cryogenic Temperatures Using a Superconducting-Resistive-Transition Edge Temperature Sensor," IEEE IMTC/97 Conference Proceedings, Vol. 1, pp 726, Ottawa, Canada, May 19-21, 1997.

[3] T. E. Lipe, J. R. Kinard, and C. D. Reintsema, "Improvements in the NIST Cryogenic Thermal Transfer Standard," *submitted to CPEM 2000*, May 14-19, Sydney, Australia.