NBSIR 74-591

Some Problems Noted in the use of Taguchi Semiconductor Gas Sensors as Residential Fire/Smoke Detectors

Richard W. Bukowski and Richard G. Bright

Center for Fire Research
Institute for Applied Technology
National Bureau of Standards
Washington, D. C. 20234

December 1974

U.S. DEPARTMENT OF COMMERCE
NATIONAL BUREAU OF STANDARDS

NBSIR 74-591

SOME PROBLEMS NOTED IN THE USE OF TAGUCHI SEMICONDUCTOR GAS SENSORS AS RESIDENTIAL FIRE/SMOKE DETECTORS

Richard W. Bukowski and Richard G. Bright

Center for Fire Research
Institute for Applied Technology
National Bureau of Standards
Washington, D. C. 20234

December 1974

U.S. DEPARTMENT OF COMMERCE, Frederick B. Dent, Secretary
NATIONAL BUREAU OF STANDARDS, Richard W. Roberts, Director

SOME PROBLEMS NOTED IN THE USE OF TAGUCHI SEMICONDUCTOR GAS SENSORS AS RESIDENTIAL FIRE/SMOKE DETECTORS

Richard W. Bukowski[1]
and
Richard G. Bright

This paper reports on the performance of some Taguchi semiconductor gas sensors for use as residential fire/smoke detectors. The sensors were found to have difficulty detecting fires involving complete combustion and also had a greater than normal propensity to false alarm in other than fire conditions. Both of these problems raise serious questions as to the suitability of the sensors tested as residential fire/smoke detectors.

Key words: False alarm; fire detector; fire test; residential smoke detector; semiconductor gas sensor; sensor contamination.

1. INTRODUCTION

The National Bureau of Standards is engaged in developing performance specifications for optimum effectiveness of residential smoke detectors. As part of this program studies have been conducted of the fire and smoke response characteristics for most of the residential smoke detectors on the U.S. market.

These examinations have included both full-scale and laboratory small-scale fire tests. In addition, analyses of false alarm tendencies have been investigated for all types of detectors. An extensive review of the available literature, both published and unpublished, has been conducted as well for all types of detectors.

Most of the smoke detectors examined have been of the conventional photoelectric or ionization-chamber type, but several of the detectors examined have utilized the Taguchi semiconductor gas-sensing device. These sensors were first developed and are being manufactured in Japan where they are sold as combustible gas detectors. In the U.S., however, these sensors are being employed in detectors which are being marketed as fire/smoke detectors. These sensors are commonly referred to as Taguchi gas sensors, named after their inventor.

This report covers the performance of detectors using the Taguchi gas sensor as the detecting element. The data is taken from that collected in a broad scale investigation of commercial detectors.

[1]At the time this paper was written the author was a research associate at the National Bureau of Standards. Mr. Bukowski has returned to Underwriter's Laboratory.

2. CONSTRUCTION OF DETECTOR SENSING ELEMENT

The gas sensing element consists of two helically-wound coil electrodes formed of a metal which is nonoxidizable at high temperatures, and a block of high temperature organic electrical insulating material having concave grooves on two side faces. The radius of the grooves conforms with the peripheral surfaces of the electrodes. A high melting point, inorganic bonding agent is used to fix the electrodes to the concave grooves of the block. The structure is then embedded in a metal oxide semiconductor to form the complete structure. The element is supported by the four coil leads on posts embedded in a mounting base so as to allow free air flow on all surfaces of the semiconductor coating. A fine mesh wire cage is affixed over the assembly to protect it from physical contact and to prevent flame propagation should a combustible gas/air mixture ignite in contact with the heating coil (see fig. 1).

3. THEORY OF OPERATION

The semiconductor crystal used in the device is an N-type in which electricity is conducted principally by the flow of free electrons. Since the number of free carriers is a function of the surface temperature, the embedded heater coils are used to maintain the semiconductor at a temperature of approximately 250°C (482°F) so as to increase the number of free carriers. The elevated temperature also serves to prevent the condensation of water vapor on the semiconductor surface (which would tend to reduce the surface conductivity) and to burn off any residue.

As was stated above, the structure is N-type semiconductor primarily a metallic oxide coating (generally tin dioxide). The resulting coating has a highly porous surface on which oxygen molecules are normally trapped (chemisorbed). When the sensor is exposed to an atmosphere containing an oxidizable (reducing) gas, the molecules react with the trapped oxygen causing the release of electrons into the conduction band. This reduces the surface resistance of the element, thus triggering an alarm.

4. RESPONSE TO FIRES

Based both on the principle of operation and tests conducted by several individuals and laboratories [1,2][1], the device detects fires only by sensing the oxidizable gases released by burning materials. This would indicate that these devices will only sense fires burning with incomplete combustion. If combustion of the material is complete, the oxidizable gases liberated from the burning materials are consumed by the flames and therefore are not available to the sensor. This can be easily demonstrated by the burning of gasoline. The sensor will detect the gasoline vapors

[1]Numbers in brackets indicate the literature references at the end of this paper.

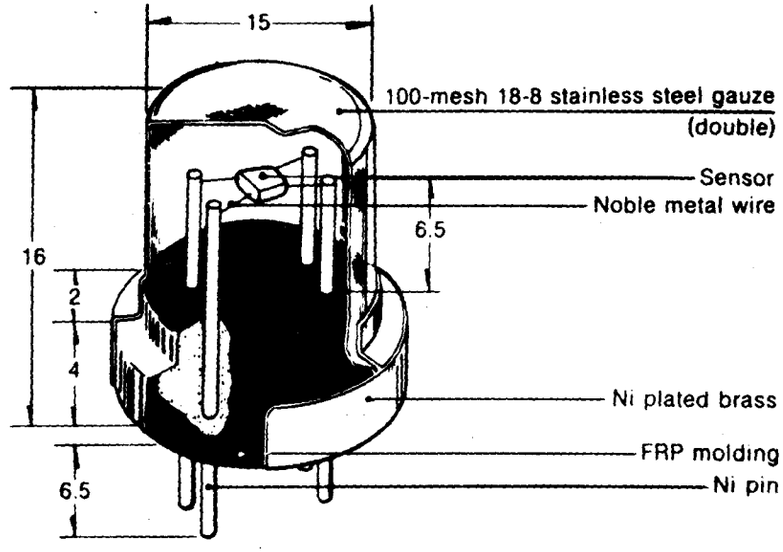

Figure 1. TGS Combustible Gas Sensor

before ignition, but not afterwards. If the flow of oxygen to the gasoline fire is limited the sensor will again be able to detect the fire. In fact, Figaro Engineering, Inc., the major producer of the semiconductor gas sensors, states in their product literature [3], "Since the TGS (Taguchi Gas Sensor) is literally a gas sensor, it is of no use for detecting smoke which does not contain any volatile or gaseous by-product." "As for a fire sensor, the current one (sensor) is not good since its sensitivity to CO is poor."

When tested in a small-scale smoke sensitivity test chamber, such as used for sensitivity determinations with photoelectric and ionization chamber smoke detectors (see fig. 2 for a typical small-scale test chamber), the Taguchi gas sensor has equivalent response to the other types.

Table 1 shows the comparative sensitivity response of a Taguchi gas sensor, a photoelectric detector, and an ionization chamber detector in the NBS small-scale smoke sensitivity test chamber. Note the similarity of alarm points of the three detectors at various air velocities from 15 fpm (4.6 metres/min) to 150 fpm (45.7 metres/min). This similar response is due mainly to the fact that combustibles used in these small-scale tests are generally smoldering cellulosics (punk sticks or cotton lamp wicks) and produce insufficient thermal energy to cause complete combustion of the oxidizable gases emitted.

Table 1. Small-Scale Sensitivity Tests

	Alarm Point $\%\text{-ft.}^{-1}$ (OD-m^{-1})*		
Smoke Velocity FPM (m-min^{-1})	Taguchi Gas Detector	Photoelectric Detector	Ion Chamber Detector
15 (4.5)	2.23 (0.03)	2.0 (0.029)	3.17 (0.046)
30 (9.2)	1.63 (0.02)	1.40 (0.020)	1.85 (0.026)
50 (15)	1.25 (0.018)	1.34 (0.019)	1.23 (0.018)
100 (30)	0.79 (0.011)	0.98 (0.014)	0.85 (0.013)
150 (45.7)	0.75 (0.010)	0.92 (0.013)	0.57 (0.008)

*$\%\text{-ft}^{-1}$ = Light obscuration over five-foot length
OD-m^{-1} = Optical density per metre

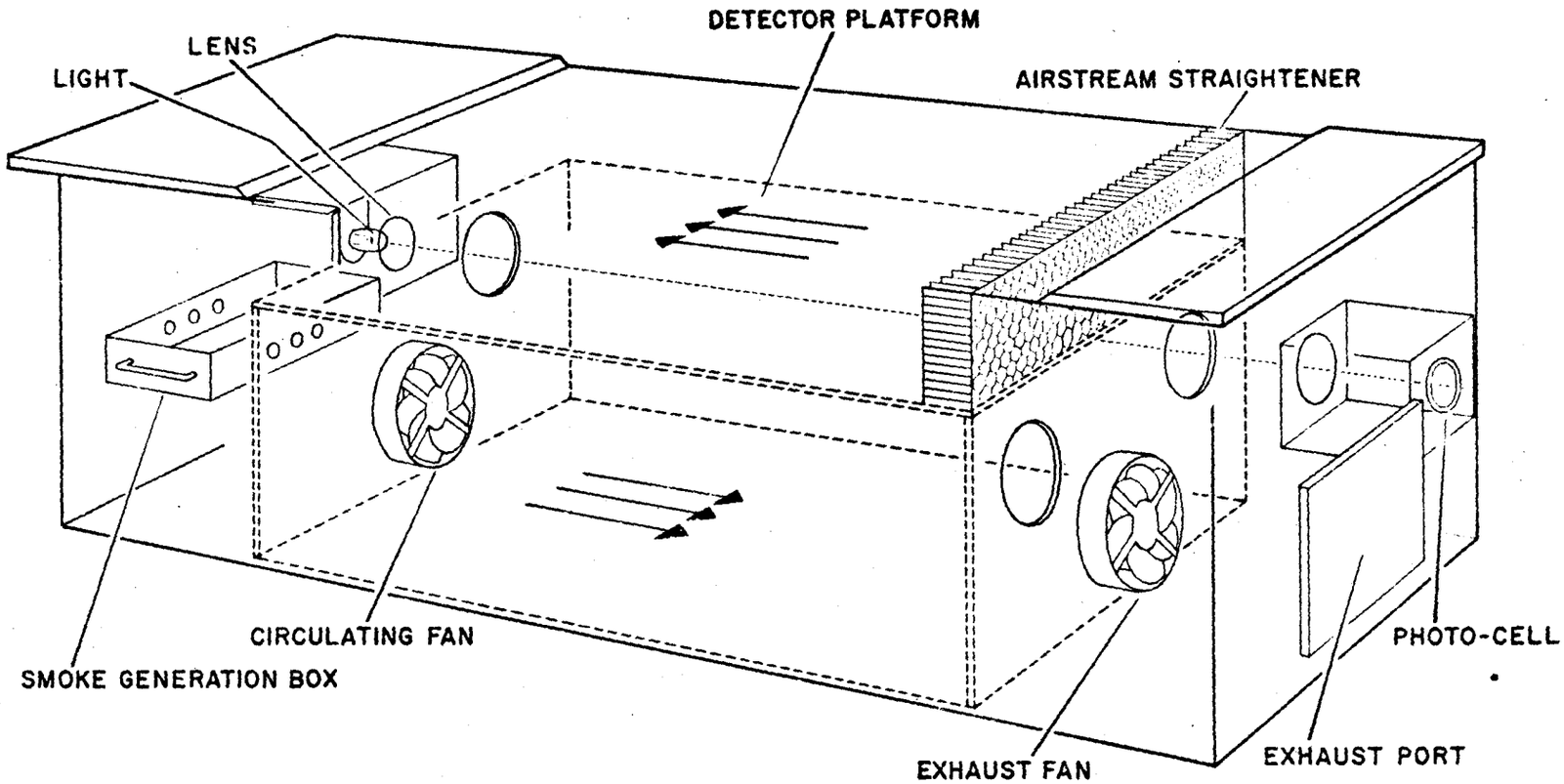

SMOKE DETECTOR TEST CHAMBER

Figure 2. Smoke Detector Test Chamber

The lack of response of the semiconductor gas sensor as a fire/smoke detector is shown in large-scale testing with flaming combustibles, where an adequate supply of oxygen is available for complete combustion. This lack of response was observed in a series of full-scale fire tests conducted by NBS on several different types of conventional smoke detectors including a Taguchi detector [4]. Twenty-six full-scale test fires were conducted in a large room of about 55,000 cubic feet (1,557 cubic metres). Ten detectors including photoelectric and ionization chamber detectors, and one Taguchi detector, were located on the ceiling of the test room approximately 21 feet from the fire center. The 26 test fires included shredded paper, wood cribs, gasoline, polystyrene, polyurethane, and cotton. All test fires were flaming fires except for the cotton fire which was a smoldering fire. Table 2 describes the test fire series.

Most of the conventional smoke detectors responded to nearly all of the test fires. The Taguchi detector detected and alarmed for only one of the shredded paper fires. The Taguchi detector was equipped with an analog metered output in addition to its alarm horn. There was a small analog output for the other shredded paper fires and the smoldering cotton fire, but the detector did not approach its alarm point. The Taguchi detector was tested in the small-scale sensitivity test chamber before and after the full-scale tests. Its alarm point ranged between one-and two-percent-per-foot in terms of light obscuration (an optical density of 0.014 to 0.028 per metre), approximately the same sensitivity range of the conventional smoke detectors used in the full-scale test fires. See table 3 for a summary of detector alarm response times.

5. LONG TERM STABILITY

The device, as being used today, has only been available for approximately three years. Since there is no known way to conduct an accelerated aging test on these devices, it is only known that they can exist in a pollutant-free atmosphere for approximately three years and still remain operational. There is, however, some variation in the sensitivity of the device to certain gases over a period of time.

On the short term, the basic manufacturer states that the sensitivity of the device varies from day-to-day as a function of the ambient temperature and humidity conditions. It has been reported that the sensitivity to other gases slowly decreases with time. For example, the sensitivity to hydrogen goes up while the sensitivity to carbon monoxide goes down. The rate of increase or decrease also varies from material to material. It is for these reasons that the long term stability of the device would be in question and would be a function of the ambient conditions in which the device is installed. This would make it difficult to predict the long term stability of the device in a given installation.

Table 2

Test Nos.	Types of Test Fires
1,2,3,10	Eight ounces (250g) of shredded paper in hardware cloth basket. Match ignited in bottom center.
4,5	Class A wood brand ignited by 100 cc of ethyl alcohol.
6	100 cc of motor gasoline, match ignition.
7	200 cc of motor gasoline, match ignition.
8,9,27	Two ounces (57g) of polystyrene packing material, ignited by 50 cc of ethyl alcohol.
11,12	Two Class A wood brands ignited by 100 cc of ethyl alcohol.
13,14,21	Two Class A wood brands ignited by 25 cc of ethyl alcohol.
15	Class A wood brand on 1000-watt hot plate. Immediate ignition, flaming fire.
16	Two 12"x12"x3" (30x30x8cm) pieces of flexible polyurethane foam ignited by 10 cc of ethyl alcohol.
17A	Three 12"x12"x3" (30x30x8cm) pieces of flexible polyurethane foam ignited by 10 cc of ethyl alcohol.
19,24	Three 12"x12"x3" (30x30x8cm) pieces of flexible polyurethane foam ignited by 10 cc of ethyl alcohol.
20	Raw cotton, 2 pounds (900g), in pan on 1000-watt hot plate.
22,23	One Class A wood brand ignited by 10 cc of ethyl alcohol.
25,26	One 12"x12"x3" (30x30x8cm) piece of flexible polyurethane foam ignited by 10 cc of ethyl alcohol.

Table 3
Detector Alarm Response - In Seconds

Test No.	A Photoelectric	J Photoelectric	H Ion Chamber	B Photoelectric	C Photoelectric	D Photoelectric	E Photoelectric	G Photoelectric	F Photoelectric	I Ion Chamber	K TGS Semiconductor
1	30	56	33	46	27	29	28	34	36	30	36
2	---	---	32	29	---	---	---	---	---	27	---
3	28	---	30	30	26	28	27	31	32	27	---
4	---	---	45	45	---	---	---	---	---	38	---
5	---	---	45	42	---	---	---	---	41	35	---
6	62	---	44	52	55	72	58	107	57	39	---
7	63	---	46	55	76	76	59	132	64	NR	---
8	44	---	42	52	42	46	42	41	44	31	---
9	34	---	32	30	31	36	30	34	41	NR	---
10	28	---	30	28	27	28	28	31	34	28	---
11	49	---	52	51	53	58	58	---	49	43	---
12	48	---	49	56	49	55*	---	46	51	47	---
13	49	---	47	49	54	119	52	70	47	44	---
14	47	---	53	53	88	*	63	45	49	46	---
15	---	---	139	---	---	*	---	---	---	113	---
16	156	---	90	103	162	*	138	---	134	107	---
17A	154	---	85	108	163	*	138	---	170	108	---
19	123	---	97	102	124	*	124	---	119	109	---
20	1,656	---	---	1,582	---	1,754	1,762	1,690	1,632	1,654	IND
21	74	160	72	67	76	103	111	74	74	73	---
22	103	---	106	97	103	130	118	103	102	110	---
23	96	---	102	92	101	124	102	95	100	101	---
24	138	---	92	111	141	134	136	---	138	114	---
25	134	---	104	109	145	134	132	---	141	120	---
26	127	---	118	137	138	131	133	---	134	113	---
27	51	---	50	51	52	55	54	---	58	48	---

Notes:
--- No alarm or indication
IND Indication but no alarm
* Clock Timer malfunction
NR Not resetable

We have found it is possible to contaminate the crystal structure such that the device will shift sensitivity. Exposure to such gases as ammonia and sulphur dioxide cause the surface resistance to decrease for long periods of time, and, in some cases, it appears to be irreversible.

This condition cannot be electrically supervised so that it would be impossible to determine if a particular detector was operating properly unless periodic smoke tests were performed on the device.

6. FALSE ALARM PROBLEMS

The biggest problem which can be forseen in the use of this semiconductor gas sensor as a residential smoke detector is false alarms. As this sensor is responsive to <u>any</u> oxidizable gas, it will respond to a vast number of ambient conditions normally found within the home. The use of most aerosol household product near the device as well as alcohol, perfumes, or even rapid changes in ambient humidity can cause alarms.

These characteristics are especially undesirable considering the suggested location for a single smoke detector within a home. This location is in the hallway leading to the bedrooms which would, in a large percentage of homes, place the detector somewhere near a bathroom door. Since the bathroom is an area where many household aerosol products are used, a very large number of false alarms could be expected. In some home installations, false alarms have been experienced from various aerosol products used in the bathroom such as hair sprays, underarm deodorants and from the use of rubbing alcohol. The steam from hot showers has produced false alarms upon opening of the bathroom door. Where the units have been installed near the kitchen, cooking, the slicing of oranges, the pouring of sherry, and the slow ignition of gas cooking range burners have also produced false alarms.

Although residential smoke detectors operating on the ionization chamber principle tend to alarm to cigarette smoking and the particulate released by cooking, the solid state gas sensor has the same propensity for alarm to cigarette smoking coupled with its great propensity to alarm to other oxidizable gases normally present in the home. Since the ionization detector false alarm problem is considered almost intolerable by some people, it is felt that the increased false alarm propensity of the solid state gas sensor will make its use unacceptable.

7. CONCLUSIONS

Based on theoretical and experimental considerations, it appears that the currently available Taguchi gas sensor has some major drawbacks as a residential fire/smoke sensor. It is almost impossible to produce any kind of damage-causing fire in a home without producing smoke particulates; but it is relatively easy to produce a damage-causing fire in the home which does not produce oxidizable gases at a level detectable by the Taguchi gas sensors. Based on the test results, we believe that it is

likely that a detector employing a Taguchi gas sensor will not detect a certain proportion of residential fires that would be readily detected by conventional smoke detectors.

In addition to the basic question of the detection capabilities, the questions of long term sensor stability and propensity to false alarm provide additional indications which lead to the conclusion that the sensor is presently unsuitable for residential fire/smoke detection.

8. GENERAL COMMENTS

Solid state gas sensing semiconductors have a use for the detection of methane or propane leaks within a home and function quite well for this purpose. However, from the tests on the current devices it appears that they should not be relied on as a fire/smoke detection device. The devices were developed and are manufactured in Japan where they are only allowed to be sold as gas detectors; and are not accepted as fire detectors in that country.

Some manufacturers of the Taguchi detectors have stated that the unresponsiveness of the detectors to full-scale fires and the detector's false alarm tendency can be corrected by suitable electronic circuitry and other modifications.

Several U.S. manufacturers are expending time and resources to optimize the use of the Taguchi gas sensor as a fire/smoke detector for residential application. In addition, Figaro Engineering of Japan, the basic manufacturer of the Taguchi gas sensor, is continuing its research on developing a sensor specifically responsive to low levels of carbon monoxide. It is possible that this research may result in a fire/smoke detector at least equal in performance to conventional smoke detectors; the elimination or at least the reduction of the false alarm problem inherent in the present Taguchi gas sensor is less certain.

9. REFERENCES

[1] Purt, G., On Taguchi Gas Sensors, 4th International Fire Protection Seminar, Zurich (Oct. 1973).

[2] Taguchi Gas Sensors, ESL Engineering Report, October 23, 1973 (unpublished).

[3] Gas Sensing Semiconductor, Figaro Engineering, Inc., Osaka, Japan, March 13, 1974.

[4] Bukowski, R. W. and Bright, R. G., Results of Full-Scale Fire Tests of Photoelectric Detectors, Nat. Bur. Stand. Report (to be published).

NBS-114A (REV. 7-73)

U.S. DEPT. OF COMM. BIBLIOGRAPHIC DATA SHEET	1. PUBLICATION OR REPORT NO. NBSIR 74-591	2. Gov't Accession No.	3. Recipient's Accession No.
4. TITLE AND SUBTITLE Some Problems Noted in the Use of Taguchi Semiconductor Gas Sensors as Residential Fire/Smoke Detectors			5. Publication Date October 1974
			6. Performing Organization Code
7. AUTHOR(S) Richard W. Bukowski and Richard G. Bright			8. Performing Organ. Report No. NBSIR 74-591
9. PERFORMING ORGANIZATION NAME AND ADDRESS NATIONAL BUREAU OF STANDARDS DEPARTMENT OF COMMERCE WASHINGTON, D.C. 20234			10. Project/Task/Work Unit No. 4908200
			11. Contract/Grant No.
12. Sponsoring Organization Name and Complete Address (Street, City, State, ZIP) same as No. 9			13. Type of Report & Period Covered Final
			14. Sponsoring Agency Code

15. SUPPLEMENTARY NOTES

16. ABSTRACT (A 200-word or less factual summary of most significant information. If document includes a significant bibliography or literature survey, mention it here.)

This paper examines some aspects of Taguchi semiconductor gas sensors and their use as residential fire/smoke detectors based on theoretical and experimental considerations. It was found that these sensors have difficulty detecting fires involving complete combustion along with a greater than normal propensity to false alarm to other than fire conditions. Both of these problems raise serious questions as to the suitability of these sensors as residential fire/smoke detectors, at least at their present state of development.

17. KEY WORDS (six to twelve entries; alphabetical order; capitalize only the first letter of the first key word unless a proper name; separated by semicolons)

False alarm; fire detector; fire test; residential smoke detector; semiconductor gas sensor; sensor contamination.

18. AVAILABILITY	19. SECURITY CLASS (THIS REPORT)	21. NO. OF PAGES
[X] Unlimited	UNCLASSIFIED	10
[ ] For Official Distribution. Do Not Release to NTIS		
[ ] Order From Sup. of Doc., U.S. Government Printing Office Washington, D.C. 20402, SD Cat. No. C13	20. SECURITY CLASS (THIS PAGE)	22. Price
[ ] Order From National Technical Information Service (NTIS) Springfield, Virginia 22151	UNCLASSIFIED	

USCOMM-DC 29042-P74