FDUS 853

FINAL DRAFT UGANDA STANDARD

First Edition
2009-mm-dd

Code of practice for solar water heating systems – Design, installation, testing, repair and maintenance

Reference number
FDUS 853: 2009

© UNBS 2009

Compliance with this standard does not, of itself confer immunity from legal obligations

A Uganda Standard does not purport to include all necessary provisions of a contract. Users are responsible for its correct application

© UNBS 2009

All rights reserved. Unless otherwise specified, no part of this publication may be reproduced or utilised in any form or by any means, electronic or mechanical, including photocopying and microfilm, without prior written permission from UNBS.

Requests for permission to reproduce this document should be addressed to

The Executive Director
Uganda National Bureau of Standards
P.O. Box 6329
Kampala
Uganda
Tel: 256 41 4505995
Fax: 256 41 4286 123
E-mail: unbs@infocom.co.ug
Web: www.unbs.go.ug

 © UNBS 2009 – All rights reserved

Contents

Page

1 Scope 1

2 Normative references 1

3 Definitions 5

4 Legal requirements 9

5 Types of system 10

6 Components for solar water heating systems 25
6.1 General 25
6.2 Collectors 26
6.3 Storage tanks 29
6.4 Pumps 32
6.5 Piping 33
6.6 Controls 35
6.7 Heat exchangers 38
6.8 Heat-transfer fluids 43
6.9 Expansion tank 43
6.10 Valves, gauges and meters used in solar systems 44
6.11 Air vent 45
6.12 Temperature – pressure relief valve 45
6.13 Pressure relief valve 46
6.14 Pressure gauge 46
6.15 Vacuum breaker 46
6.16 Isolation valves 47
6.17 Drain valves 48
6.18 Check valves 48
6.19 Mixing or tempering valve 49
6.20 Anti-scald valve 50
6.21 Freeze-protection valves 50
6.22 Other components 51
6.23 Water supply 52

7 Design considerations 52
7.1 General 52
7.2 Collector design considerations 52
7.3 System design considerations 54
7.4 Corrosion protection 56
7.5 Heat transfer fluids 57
7.6 Controllers and temperature sensors 57
7.7 Other design factors 58

8 Thermal performance of solar water heating systems 58
8.1 General 58
8.2 Collector class 59
8.3 Effective collector area 59
8.4 Hot water usage 60
8.5 Preheat vessel size 60
8.6 Collector mounting and location 60
8.7 Climate 61
8.8 Other factors 61

9 Electrical considerations 62
9.1 General 62

© UNBS 2009 – All rights reserved

9.2 Electrical installation 62
9.3 Electrical safety 62
9.4 Controls 62
9.5 Avoidance of electrical interference 62
9.6 Testing 62

10 Installation 63
10.1 General 63
10.2 Pre-installation procedure 63
10.3 Installation procedures 63
10.4 Collector subsystem installation 64
10.5.1 Collector positioning 65

11 Component installation 80
11.1 General 80
11.2 Piping, ducting and ancillary equipment 80
11.3 Storage tank installation 83
11.4 Pump, blowers and heat exchangers 85
11.5 Controls, sensors and safety devices 86
11.6 Freeze protection 88
11.7 Heat transfer fluids 89

12 System installation checkout and start-up procedures 90
12.1 General 90
12.2 Pressure testing 90
12.3 Flushing the system 90
12.4 Testing the pump and controls 91
12.5 Cleaning up 95
12.6 Homeowner’s manual and instructions 95

13 Commissioning and documentation 96
13.1 Filling the system 96
13.2 Drain-down systems 96
13.3 Electrical and auxiliary equipment 96
13.4 Thermal insulation for the system 97
13.5 Making good 97
13.6 Start-up and handing over 97
13.7 Recommended form of user's data sheet 98
13.8 Post-commissioning checks 99

14 Problem assessment and system checkout 99
14.1 Problem assessment 99
14.2 The initial service call 99
14.3 System records 100
14.4 Warranty coverage 100
14.5 Service history 101
14.6 Contractor liability 101
14.7 Overall checkout 101
14.8 Investigating consumer complaints — an example 102
14.9 Lifestyle analysis 102
14.10 Common problems 102
14.11 System checkout 105

15 Troubleshooting checklist 113

16 Maintenance 119

17 Safety precautions 120

Annex A: Maintenance of weather-tightness 123

Annex B: Loads on collectors 124

 © UNBS 2009 – All rights reserved

Annex C: Condensation and ventilation in roof spaces....128
Annex D: Method for calculating the thermal performance....130
Annex E: Methods of pressure and leak testing of absorber plates....134
Annex F: Methods of type testing for collectors 135
Annex G: Methods of testing for differential temperature control systems 136
Annex H (informative) Solar thermal applications and technologies 136
Annex I (informative) Solar basics....135
Annex J: Crome-dome collector siting aid....135
Annex K: Simplified sizing procedure for solar domestic hot water systems....135
Annex L: Electric water heater circuitry 136
Annex M: Volt-ohmmeter (VOM) or multimeter operation....132
Annex N: Solar system flow rates 133
Annex P: Tools for service repair 136
Bibliography....136

© UNBS 2009 – All rights reserved

Foreword

Uganda National Bureau of Standards (UNBS) is a parastatal under the Ministry of Tourism, Trade and Industry established under Cap 323, of the Laws of Uganda. UNBS is mandated to co-ordinate the elaboration of standards and is

(a) a member of International Organisation for Standardisation (ISO) and

(b) a contact point for the WHO/FAO Codex Alimentarius Commission on Food Standards, and

(c) the National Enquiry Point on TBT/SPS Agreements of the World Trade Organisation (WTO).

The work of preparing Uganda Standards is carried out through Technical Committees. A Technical Committee is established to deliberate on standards in a given field or area and consists of representatives of consumers, traders, academicians, manufacturers, government and other stakeholders.

Draft Uganda Standards adopted by the Technical Committee are widely circulated to stakeholders and the general public for comments. The committee reviews the comments before recommending the draft standards for approval and declaration as Uganda Standards by the National Standards Council.

Committee membership

The following organisations were represented on Subcommittee on Solar Energy, UNBS TC 13/SC 3, in the preparation of this standard:

- Renewable Energy Department, Ministry of Energy and Mineral Development
- Makerere University
- Incafex Solar Systems
- Battery Masters (U) Limited
- Equator-sun (U) Limited
- Ultratec (U) Limited
- Sonnerkraft Solar Systems
- Solar Masters
- Uganda National Plumbers Association
- Uganda Institute of Professional Engineers
- Uganda National Bureau of Standards

© UNBS 2009 – All rights reserved

Code of practice for solar water heating systems – Design, installation, testing, repair and maintenance

1 Scope

1.1 This code of practice provides recommendations for solar water heating systems having collectors with liquid heat transfer media for heating water to help ensure adequate operation and safety. Design consideration, manufacture, handling, installation, operation and maintenance are included.

1.2 This code of practice applies regardless of the fraction of heating requirements supplied by solar energy, the type of conventional fuel used in conjunction with solar, or the heat transfer fluid (or fluids) used as the energy transport medium. However, where more stringent requirements are recommended by the manufacturer, these manufacturer requirements shall prevail.

1.3 This code of practice does not apply to space heating and swimming pools.

2 Normative references

The following referenced documents are indispensable for the application of this Uganda Standard. For dated references, only the edition cited applies. For undated references, the latest edition of the referenced document (including any amendments) applies.

ISO 9059:1990, Solar energy – Calibration of field pyrheliometers by comparison to a reference pyrheliometer

ISO 9060:1990, Solar energy – Specification and classification of instruments for measuring hemispherical solar and direct solar radiation

ISO 9459 -1:1993, Solar heating – Domestic water heating systems – Part 1: Performance rating procedure using indoor test methods

ISO 9459-2:1995, Solar heating – Domestic water heating systems – Part 2: Outdoor test methods for system performance characterization and yearly performance prediction of solar –only systems

ISO 9459-5:2007, Solar heating - Domestic water heating systems – Part 5: System performance characterization by means of whole-system test and computer simulation

ISO 9488:1999, Solar energy – Vocabulary

ISO 9553:1997, Solar energy – Methods of testing preformed rubber seals and sealing compounds used in collectors

ISO 9806-1:1994, Test methods for solar collectors – Part 1: Thermal performance of glazed liquid heating collectors including pressure drop

ISO 9806-2:1995, Test methods for solar collectors – Part 2: Qualification test procedures

ISO 9806-3:1995, Test methods for solar collectors – Part 3: Thermal performance of unglazed liquid heating collectors (sensible heat transfer only) including pressure drop

© UNBS 2009– All rights reserved

ISO 9808:1990, Solar water heaters — Elastomeric materials for absorbers, connecting pipes and fittings — Method of assessment

ISO 9845-1:1992, Solar energy — Reference solar spectral irradiance at the ground at different receiving conditions – Part 1: Direct normal and hemispherical solar irradiance for air mass 1.5

ISO 9846:1993, Solar energy — Calibration of a pyranometer using a pyrheliometer

ISO 9847:1992, Solar energy — Calibration of field pyranometers by comparison to a reference pyranometer

ISO/TR 9901:1990, Solar energy — Field pyranometers — Recommended practice for use

ISO/TR 10217:1989, Solar energy — Water heating systems — Guide to material selection with regard to internal corrosion

ISO 4952:2006, Structural steels with improved atmospheric corrosion resistance

ISO 11303:2002, Corrosion of metals and alloys — Guidelines for selection of protection methods against atmospheric corrosion

ISO 11972:1998, Corrosion-resistant cast steels for general applications

US 854-1, Thermal solar systems and components — Solar collectors — General requirements

US 854-2, Thermal solar systems and components — Solar collectors — Test methods

US 855-1:2009, Uganda Standard — Thermal solar systems and components — Factory made systems — General requirements

US 855-2:2009, Thermal solar systems components — Factory made systems — Test methods

US 857-1:2009, Thermal solar systems and components — Custom built systems —Part 3: General requirements

US 857-2:2009, Thermal solar systems and components — Custom built systems — Part 2: Test methods

US 857-3:2009, Thermal solar systems and components — Custom built systems —Part 3: Performance characterization of stores for solar heating systems

US 862, Standard test method for determination of solar reflectance near ambient temperature using a portable solar reflectometer

US 861, Standard practice for evaluating absorptive solar receiver materials when exposed to conditions simulating stagnation in solar collectors with cover plates

US 856, Standard guide for on-site inspection and verification of operation of solar domestic hot water systems

ISO 559:1991, *Steel tubes for water and sewage*

ASTM B42:2002, *Standard specification for seamless copper pipe, standard sizes*

ISO 7598:1988, *Stainless steel tubes suitable for screwing in accordance with ISO 7-1*

ISO 49:1994, *Malleable cast iron fittings threaded to ISO 7-1*

ISO 4144:2003, *Pipework — Stainless steel fittings threaded in accordance with ISO 7-1*

 © UNBS 2009 – All rights reserved

ASTM A126:2004, *Standard specification for gray iron castings for valves, flanges, and pipe fittings*

BS 417-2, *Specification for galvanized low carbon steel cisterns, cistern lids, tanks and cylinders — Part 2: Metric units*

ISO 12468-1:2003, *External exposure of roofs to fire — Part 1: Test method*

ISO 12468-2:2005, *External fire exposure to roofs — Part 2: Classification of roofs*

ISO 3008:2007, *Fire-resistance tests — Door and shutter assemblies*

IEC 60364 (All parts), *Low-voltage electrical installations*

ASTM E119:2007, *Standard test methods for fire tests of building construction and materials*

ASTM E861:1994(2007), *Standard practice for evaluating thermal insulation materials for use in solar collectors*

ISO 9774:2004, *Thermal insulation for building applications — Guidelines for selecting properties*

ISO 13787:2003, *Thermal insulation products for building equipment and industrial installations — Determination of declared thermal conductivity*

BS 864-2, *Capillary and compression tube fittings of copper and copper alloy — Part 2: Specification for capillary and compression fittings for copper tubes*

BS 864-3, *Capillary and compression tube fittings of copper and copper alloy — Part 3: Compression fittings for polyethylene pipes*

ISO 9906:1999, *Rotodynamic pumps — Hydraulic performance acceptance tests — Grades 1 and 2*

ISO 15783:2002, *Seal-less rotodynamic pumps — Class II — Specification*

ISO 9908:1993, *Technical specifications for centrifugal pumps — Class III*

ISO 9905:1994, *Technical specifications for centrifugal pumps — Class I*

BS 1565-2, *Galvanized mild steel indirect cylinders, annular or saddle-back type — Part 2: Metric units*

BS 1566-1, *Copper indirect cylinders for domestic purposes — Part 1: Specification for double feed indirect cylinders*

BS 1566-2, *Copper indirect cylinders for domestic purposes — Part 2: Specification for single feed indirect cylinders*

BS EN 1057, *Copper and copper alloys — Seamless, round copper tubes for water and gas in sanitary and heating applications*

BS 3198, *Specification for copper hot water storage combination units for domestic purposes*

ISO 4427-1:2007, *Plastics piping systems — Polyethylene (PE) pipes and fittings for water supply — Part 1: General*

ISO 4427-2:2007, *Plastics piping systems — Polyethylene (PE) pipes and fittings for water supply — Part 2: Pipes*

© UNBS 2009 – All rights reserved

ISO 4427-5:2007, *Plastics piping systems — Polyethylene (PE) pipes and fittings for water supply — Part 5: Fitness for purpose of the system*

ISO 22391-1:2007, *Plastics piping systems for hot and cold water installations — Polyethylene of raised temperature resistance (PE-RT) — Part 1: General*

ISO 22391-5:2007, *Plastics piping systems for hot and cold water installations — Polyethylene of raised temperature resistance (PE-RT) — Part 5: Fitness for purpose of the system*

ISO 4422-1:1996, *Pipes and fittings made of unplasticized poly(vinyl chloride) (PVC-U) for water supply — Specifications — Part 1: General*

ISO 4422-2:1996, *Pipes and fittings made of unplasticized poly(vinyl chloride) (PVC-U) for water supply — Specifications — Part 2: Pipes (with or without integral sockets)*

ISO 4422-3:1996, *Pipes and fittings made of unplasticized poly(vinyl chloride) (PVC-U) for water supply — Specifications — Part 3: Fittings and joints*

ISO 4422-4:1997, *Pipes and fittings made of unplasticized poly(vinyl chloride) (PVC-U) for water supply — Specifications — Part 4: Valves and ancillary equipment*

ISO 4422-5:1997, *Pipes and fittings made of unplasticized poly(vinyl chloride) (PVC-U) for water supply — Specifications – Part 5: Fitness for purpose of the system*

EAS 205, *Controls for household appliances*

BS 4213:2004, *Cisterns for domestic use — Cold water storage and combined feed and expansion (thermoplastic) cisterns up to 500 L — Specification*

ISO 16422:2006, *Pipes and joints made of oriented unplasticized poly(vinyl chloride) (PVC-U) for the conveyance of water under pressure — Specifications*

BS 4814, *Specification for expansion vessels using an internal diaphragm, for sealed hot water heating systems*

ISO 15874-1:2003, *Plastics piping systems for hot and cold water installations — Polypropylene (PP) — Part 1: General*

ISO 15874-2:2003, *Plastics piping systems for hot and cold water installations — Polypropylene (PP) — Part 2: Pipes*

ISO 15874-5:2003, *Plastics piping systems for hot and cold water installations — Polypropylene (PP) — Part 5: Fitness for purpose of the system*

ISO 6242-1:1992, *Building construction — Expression of users' requirements — Part 1: Thermal requirements*

ISO 6242-2:1992, *Building construction — Expression of users' requirements — Part 2: Air purity requirements*

ISO 15493, *Plastics piping systems for industrial applications — Acrylonitrile-butadiene-styrene (ABS), unplasticized poly(vinyl chloride) (PVC-U) and chlorinated poly(vinyl chloride) (PVC-C) — Specifications for components and the system — Metric series*

ISO 727-1:2002, *Fittings made from unplasticized poly(vinyl chloride) (PVC-U), chlorinated poly(vinyl chloride) (PVC-C) or acrylonitrile/butadiene/styrene (ABS) with plain sockets for pipes under pressure — Part 1: Metric series*

 © UNBS 2009 – All rights reserved

IEC 61000-3-2, *Electromagnetic compatibility (EMC) — Part 3-2: Limits — Limits for harmonic current emissions (equipment input current ≤ 16 A per phase)*

ISO 22897:2003, *Glass in building — Glazing and airborne sound insulation — Product descriptions and determination of properties*

ISO 16932:2007, *Glass in building — Destructive-windstorm-resistant security glazing — Test and classification*

ISO 3934:2002, *Rubber, vulcanized and thermoplastic — Preformed gaskets used in buildings — Classification, specifications and test methods*

ISO 9050:2003, *Glass in building — Determination of light transmittance, solar direct transmittance, total solar energy transmittance, ultraviolet transmittance and related glazing factors*

ISO 8873-1:2006, *Rigid cellular plastics — Spray-applied polyurethane foam for thermal insulation — Part 1: Material specifications*

ISO 8873-2:2007, *Rigid cellular plastics — Spray-applied polyurethane foam for thermal insulation — Part 2: Application*

ISO 24510, *Activities relating to drinking water and wastewater services — Guidelines for the assessment and for the improvement of the service to users*

ISO 24512, *Activities relating to drinking water and wastewater services — Guidelines for the management of drinking water utilities and for the assessment of drinking water services*

ISO 2103:1986, *Loads due to use and occupancy in residential and public buildings*

ISO 4354, *Wind actions on structures*

ISO 12494, *Atmospheric icing of structures*

ISO 9453, *Soft solder alloys — Chemical compositions and forms*

ISO 9454-1, *Soft soldering fluxes — Classification and requirements — Part 1: Classification, labelling and packaging*

ISO 9454-2:1998, *Soft soldering fluxes — Classification and requirements — Part 2: Performance requirements*

ISO 12224-1, *Solder wire, solid and flux cored — Specification and test methods — Part 1: Classification and performance requirements*

3 Definitions

For the purpose of this Uganda Standard, the definitions given in ISO 9488 and the following definitions apply.

3.1
absorber plate surface coating
a coating the principal function of which is to absorb solar radiation

3.2
absorber plate (absorber)
the element of a collector that receives and absorbs the solar radiation and converts into heat

3.3

© UNBS 2009 – All rights reserved

absorptance
the ratio of the solar radiation absorbed by a surface to that which falls on the surface

3.4
accessible, adj
permitting close approach that may require removal or opening of an access pane, door, or similar obstruction

3.5
aperture
that part of the outer surface of the collector which admits solar radiation to the absorber plate, including any glazing bars or supports over the absorber

3.6
aperture area
the maximum area projected by the aperture

3.7
auxiliary energy subsystem, *n*
in solar energy application, equipment using non-solar energy sources to supplement or backup the output provided by a solar energy system

3.8
collector (solar collector, solar panel)
the general term for the device in which solar radiation is absorbed, converted to heat, and removed by the heat transfer fluid

3.9
differential temperature controller
a device that is able to detect a temperature difference, and to control pumps and other electrical devices in accordance with this temperature difference

3.10
direct system
a system in which the water that will ultimately be drawn from the hot taps passes through the collector

3.11
drainback system
a system in which, as part of the normal working cycle, the collector is automatically drained and refilled with heat transfer fluid

3.12
draindown system
a system in which the collector is drained to waste, either manually or automatically, when freezing conditions are likely to occur

3.13
draw-off temperature (delivery temperature)
the temperature at which domestic hot water is supplied

3.14
durability, *n*
the ability (of a system or component) to operate properly as long as intended

3.15
effective area
the area of the perfect collector that would collect the same amount of solar energy as the aperture area

3.16
emittance

 © UNBS 2009 – All rights reserved

the ratio of the thermal radiation from the unit area of a surface to the radiation from the unit area of a full emitter ('black body') at the same temperature

3.17
flash point, *n*
of a liquid, the minimum temperature at which it gives off vapour in sufficient concentration to form an ignitable mixture with air near the surface of the liquid within the vessel as specified by appropriate test procedure and apparatus

3.18
flat plate collector
a collector that employs no concentration of the incident solar radiation, and in which the absorber plate is essentially planar

3.19
gravity system (thermosyphon system)
a system in which circulation of the heat transfer fluid is achieved by natural convection

3.20
heat transfer fluid, *n*
(i) in solar energy systems, a liquid or gas that passes through the solar collector and carries the absorbed thermal energy away from the collector

(ii) any fluid that is used to transfer thermal energy between subsystems in solar energy systems

3.21
indirect system
a system in which a fluid other than the water ultimately drawn from the hot passes through the collector

3.22
open system
a system in which the heat transfer fluid is in extensive contact with the atmosphere

3.23
operating conditions, extreme*, n*
unusual physical conditions to which a component or system may be exposed and for which it is not designed or intended to withstand, nor is it required to withstand by a local regulatory agency

3.24
operating conditions, normal*, n*
the usual range of physical conditions (for example, temperature, pressure, wear and tear, weather) for which the component or system was designed

3.25
potable water, *n*
water that is free of impurities in amounts sufficient to cause disease or harmful physiological effects and conforming in its bacteriological and chemical quality to the regulations of the public health authority having jurisdiction

3.26
preheat vessel (solar store)
a thermal store for the energy transferred from the collector

3.27
pumped system
a system in which the heat transfer fluid is circulated by means of a pump

3.28
reliability, *n*

© UNBS 2009 – All rights reserved

the ability (of a system or component) to operate properly when required

3.29
SDHW, *n*
solar domestic hot water

3.30
sealed system
a system in which the heat transfer fluid is completely sealed from the atmosphere

3.31
selective surface
an absorber plate surface coating that will decrease the radiative emission from the absorber plate whilst maintaining a high absorptance for solar radiation

3.32
shall, *vi*
a mandatory requirement necessary to provide minimum operation and safety

3.33
should, *vi*
a recommended method or component to provide improved performance and effectiveness

3.34
solar energy system, active, *n*
a solar energy system that uses mechanical equipment (pumps, fans), that is not an integral part of a structure, to collect and transfer thermal energy, either to the point of use or to be stored for later use

3.35
solar water heating systems, direct, *n*
a solar water heating system in which the potable water passes directly from the water supply, through the collectors and storage, to the residential hot water supply

3.36
solar energy system, drainback, *n*
a solar energy system in which the heat transfer fluid is drained out of the collector and exposed piping, and into a storage tank, a holding tank, or expansion tank in order to protect the collector and piping from damage due to freezing

3.37
solar energy system, draindowm, *n*
a solar energy system in which the heat transfer fluid is drained out of the collector and exposed piping to an external drain in order to protect the collector and piping from damage due to freezing

3.38
solar water heating system, indirect, *n*
a solar water heating system in which a closed circulation loop isolates one fluid from contact with others in the system. This closed loop may contain a nonpotable fluid.

3.39
solar energy system, thermosiphon, *n*
a solar energy system in which the heat transfer fluid circulates by convection as the less dense, warm fluid rises and is displayed by the denser, cooler fluid.

3.40
solar water heating system, tank absorber, *n*
Solar Domestic Hot Water (SDHW) system in which solar radiation is absorbed by the surface of the storage tank, which is usually installed in an insulated housing whose sunward side is glazed. Such systems are also referred to as “batch” or “breadbox” heaters.

 © UNBS 2009 – All rights reserved

3.41
toxic, *adj*
any substance (other than a radioactive substance) that has the capacity to produce personal injury or illness to man through ingestion, inhalation, or absorption through any body surface, or any substance producing a lethal close in half (LD50) of white rats when ingested as a single close of less than 10 g/kg of body mass.

3.42
trickle collector
a flat plate collector in which the heat transfer fluid is not contained within passage ways in the absorber plate but flows down the plate surface

3.43
vented system
a system in which contact between the heat transfer fluid and the atmosphere is restricted to the free surface of a feed and expansion cistern

3.44
weather conditions, extreme, ***n***
environmental conditions that are rare in a local climatic region (which have occurred no more than once during the past 30 years)

3.45
weather conditions, normal, *n*
the (actual or anticipated) range of environmental conditions (rain, snow, hail, wind, temperature, pollution) that typically occur in a local climatic region over several years

4 Legal requirements

4.1 General

The local authority and water supplier for the region in which a proposed installation is to be sited should always be consulted concerning the requirements in respect of planning, building regulations and water supply before the installation of a solar water heating system is undertaken.

4.2 Planning

Planning permission may to be obtained from the local planning authority before carrying out any ‘development’. Consequently application should be made to the local planning authority to ascertain whether or not the proposed installation constitutes ‘development’.

4.3 Building regulations

General regulations have been enacted concerning the design and construction of buildings. Solar heating systems incorporated into buildings have to comply with these regulations in so far as they effect such matters as the materials of construction, roof loading, weather tightness, fire resistance, insulation, etc.

Advice on some of these matters is given in this code. However, responsibility for the application of the regulations in a particular area rests with the local authority, which may require plans to be deposited, showing how the regulations have been complied with.

4.4 Water supply

Water supply byelaws for preventing waste, undue consumption, misuse, or contamination of water supplies have been made by water authorities and water supply companies in respective local authorities.

These byelaws require written notice to be made to the water supply authority before any installation of, or alteration to, a water fitting is made, if connected to the authority’s supply. Where a water fitting has been installed, that can subsequently be found by the water supply authority to contravene its byelaws, the water

© UNBS 2009 – All rights reserved

supply can insist that the occupier remove it. The occupier of the premises will also, on summary conviction of such an offence, be liable to a fine in respect of each offence and, in the case of a continuing offence, to a further fine for each day during which the offence continues after such a conviction. It should be noted that, whilst the various sets of byelaws are identical except in a few minor respects, the interpretation and enforcement of each set of byelaws will vary with the particular water supplier concerned. Bearing this in mind, it is considered that to attempt to give meaningful general guidance on the application of water byelaws in this code of practice could be misleading.

It is, however, in the interest of prospective purchasers of solar heating systems to obtain the assurance of the installer/manufacturer of the system that the recommendations given in 7.3.3 and 7.5 of this code of practice have been followed.

4.5 Other actions

In addition to complying with the legal requirements detailed in 4.1 to 4.4, it is recommended that he occupier/ owner inform the lessors, mortgagors, insurers, etc of the property as applicable.

5 Types of system

5.1 General

A solar water heating system which incorporates arrangements for providing……

A hot water system incorporating solar water heating may contain arrangements for providing heat by other means such as a solid fuel, gas or oil fired boiler or an electric immersion heater. This is necessary in places where the water cannot be heated to the required draw-off temperature at all times of the year by solar energy alone due to cloudy conditions.

The working principle of solar hot water systems is shown schematically in Figure 5.1. Water from the cold supply is led to the ‘cold store’ (the feed cistern) whence it passes into the preheat vessel, forming the ‘warm store’ where it is heated by solar energy. The water passes then to the ‘hot store’ (the hot water cylinder) which is heated by a boiler or electric immersion heater.

NOTE To discourage the growth of the organism responsible for Legionnaire’s disease, water in the hot store should be kept at a temperature of at least 55 ^{o}C.

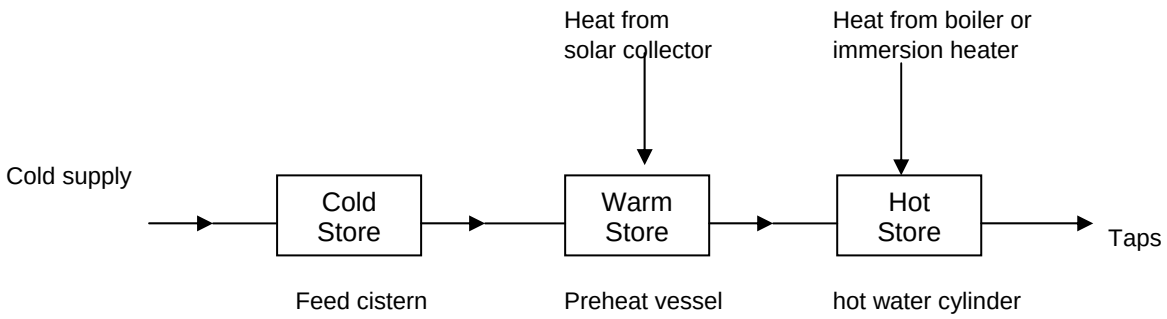

NOTE Preheat vessel and hot water cylinder may be combined in one vessel

Figure 5.1 – Working principle of solar hot water system

5.2 System types

5.2.1 General

Many different designs of solar water heating systems are possible and they may be classified in several ways. Factors that influence the selection of a specific system type include the amount of water that needs to

 © UNBS 2009 – All rights reserved

be heated, relative cost and efficiency, simplicity of operation, and climate conditions in which the system will be used.

Solar water heating systems are classified into two general categories:

- active systems, which use a pump to control water flow, and

- passive systems, which use no pump.

Both active and passive systems can be either direct or indirect (Figure 5.2)

- In a direct system, the portable water circulates from the tank to the collector and back to the storage tank. Thus, the heat collecting fluid is the same potable water that is in the water heater.

- In an indirect system, the fluid that circulates through the collector may be water or it may be another heat transfer fluid. This heat-collecting fluid never comes in contact with the potable water in the storage tank. Instead, it transfers heat to the potable water through a heat exchanger.

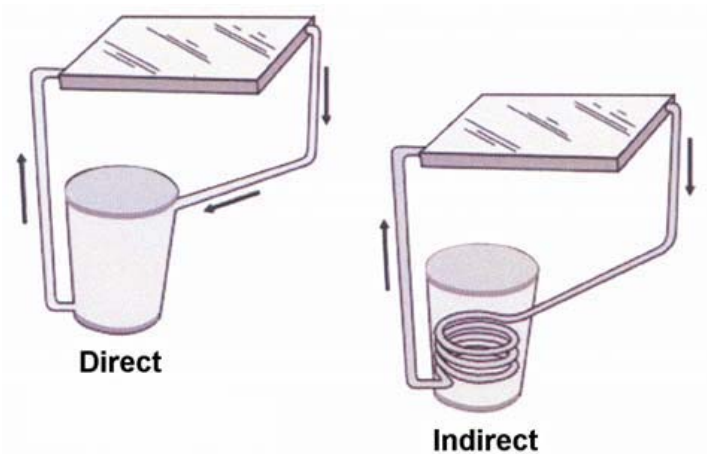

Figure 5.2 – Direct and indirect solar water heating systems

Further, there are two types of solar water heating systems – active and passive – and each has two categories – direct and indirect.

Active	**Passive**
Direct	Direct
Indirect	Indirect

Several design variations exist in each system type. The types and variations include:

1. Active direct systems
- Active direct systems that use different types of controllers

2. Active indirect systems
- Active indirect systems that use different types of controllers, heat collecting fluids, and heat exchange mechanisms

3. Passive direct and indirect systems
- Passive direct systems in which the collector and storage are one and the same
- Passive systems that circulate water through thermosiphoning action and can be direct or indirect

© UNBS 2009 – All rights reserved

5.2.2 Active direct systems

Active direct systems incorporate the following components:

- Water storage tank
- Solar collector
- Controller to regulate pump operation
- A pump or circulator to transfer water from the storage tank to the collector

Several additional components ensure proper system operation. Each of these components, listed below and in Figure 5.3, are described in Clause 6.

1) Check valves to prevent thermosiphoning action
2) Isolation valves isolate subsystem components for service.
3) Pressure relief valves relieve high pressure.
4) Temperature and pressure relief valves relieve high temperature and pressures
5) Air vents release air that could cause air locks in the system
6) Vacuum breakers allow proper collector loop drainage
7) Drain valves drain the collector loop and tank or other subsystem components
8) Freeze valves and sensors help to protect the collector from being damaged by freezing temperatures
9) Optional temperature indicators and flow meters monitor components.

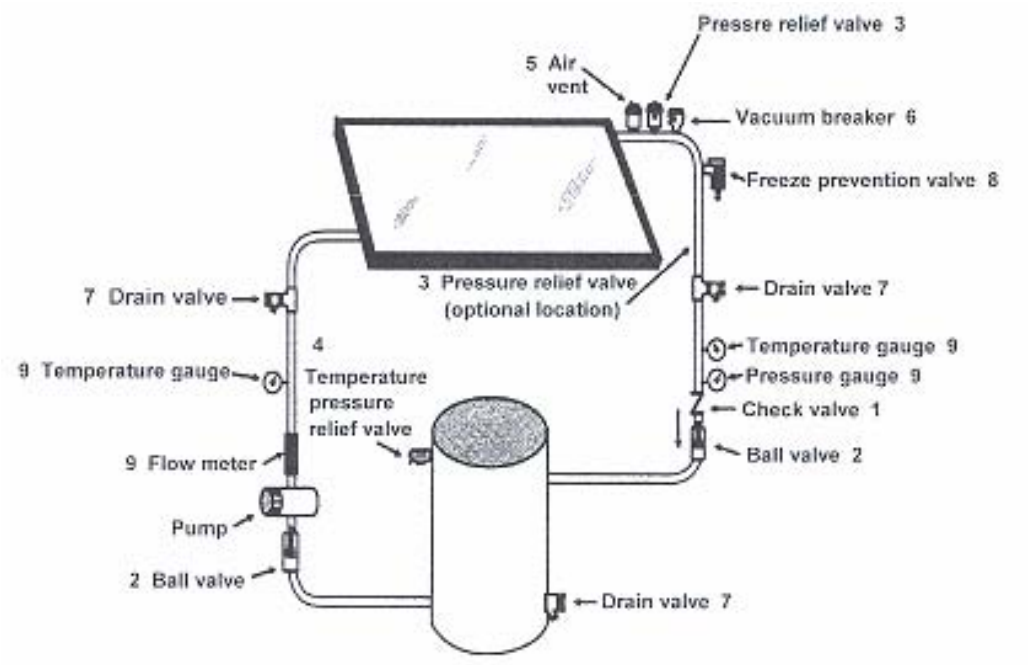

Figure 5.3- Additional system components

© UNBS 2009 – All rights reserved

Active direct systems are principally differentiated by their pump control or freeze protection scheme. Following are descriptions and illustrations of active direct systems based on their method of pump control.

5.2.2.1 Differential controlled

In a differential controlled system (Figure 5.4), the circulating pump operates when sensors located at the top of the collector (hottest point) and bottom of the storage tank (coldest point) indicate a 5-20 ^{o}C temperature difference. When the temperature difference drops to about 3 – 5 ^{o}C, the pumps switches off. During the course of the day, the controller is constantly comparing the two sensor temperatures. In this way, water circulates through the collector only when sufficient solar energy is available to increase the water temperature.

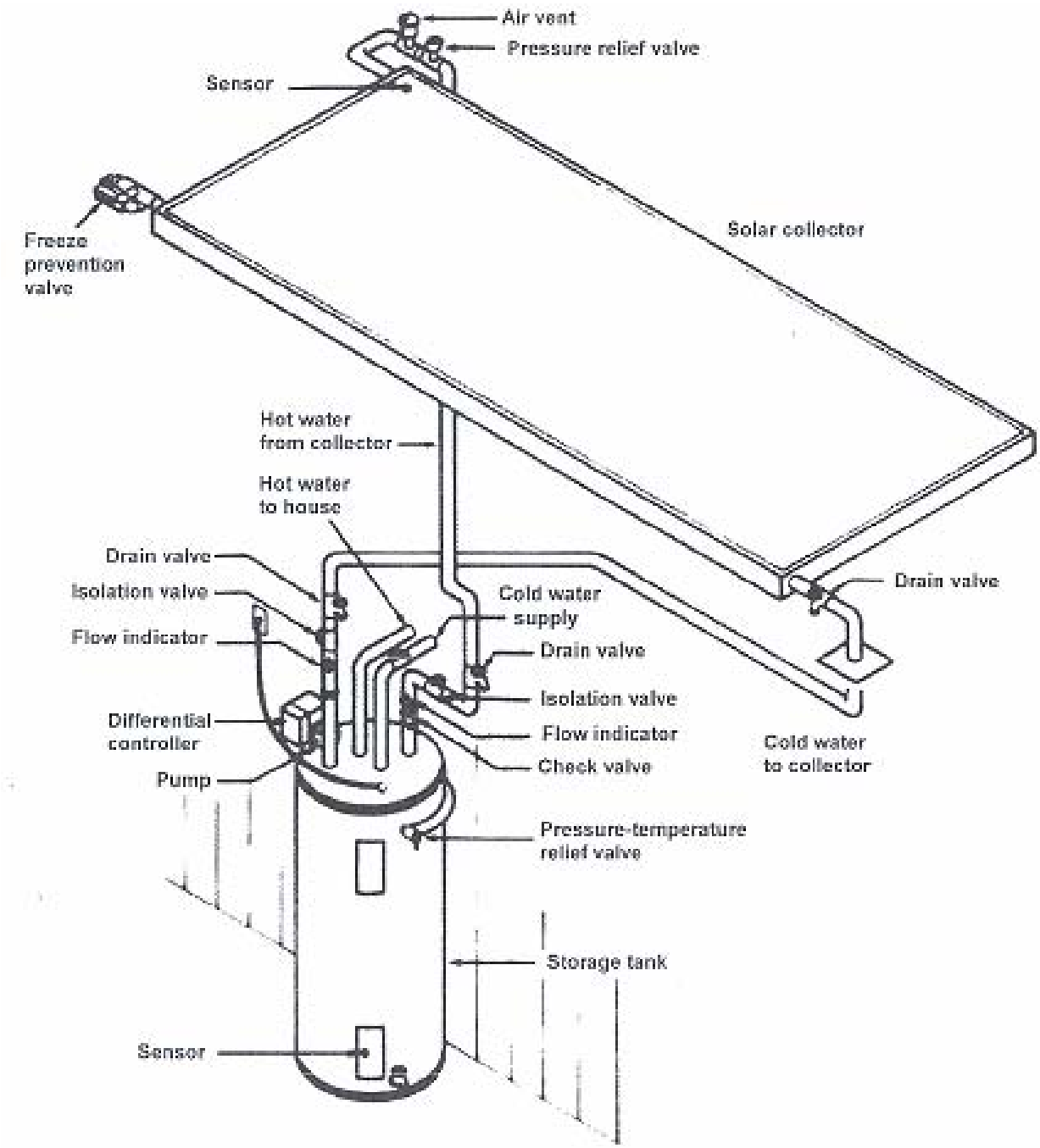

Figure 5.4 – Active direct system with differential controller

© UNBS 2009 – All rights reserved

5.2.2.2 Photovoltaic controlled

The photovoltaic (PV) controlled system (Figure 5.5) uses a PV module to operate pump control functions. In a direct-coupled system, the PV module and pump are sized and matched to ensure that the pump will begin operating when sufficient solar energy for heating water is available and will stop operating when solar energy diminishes.

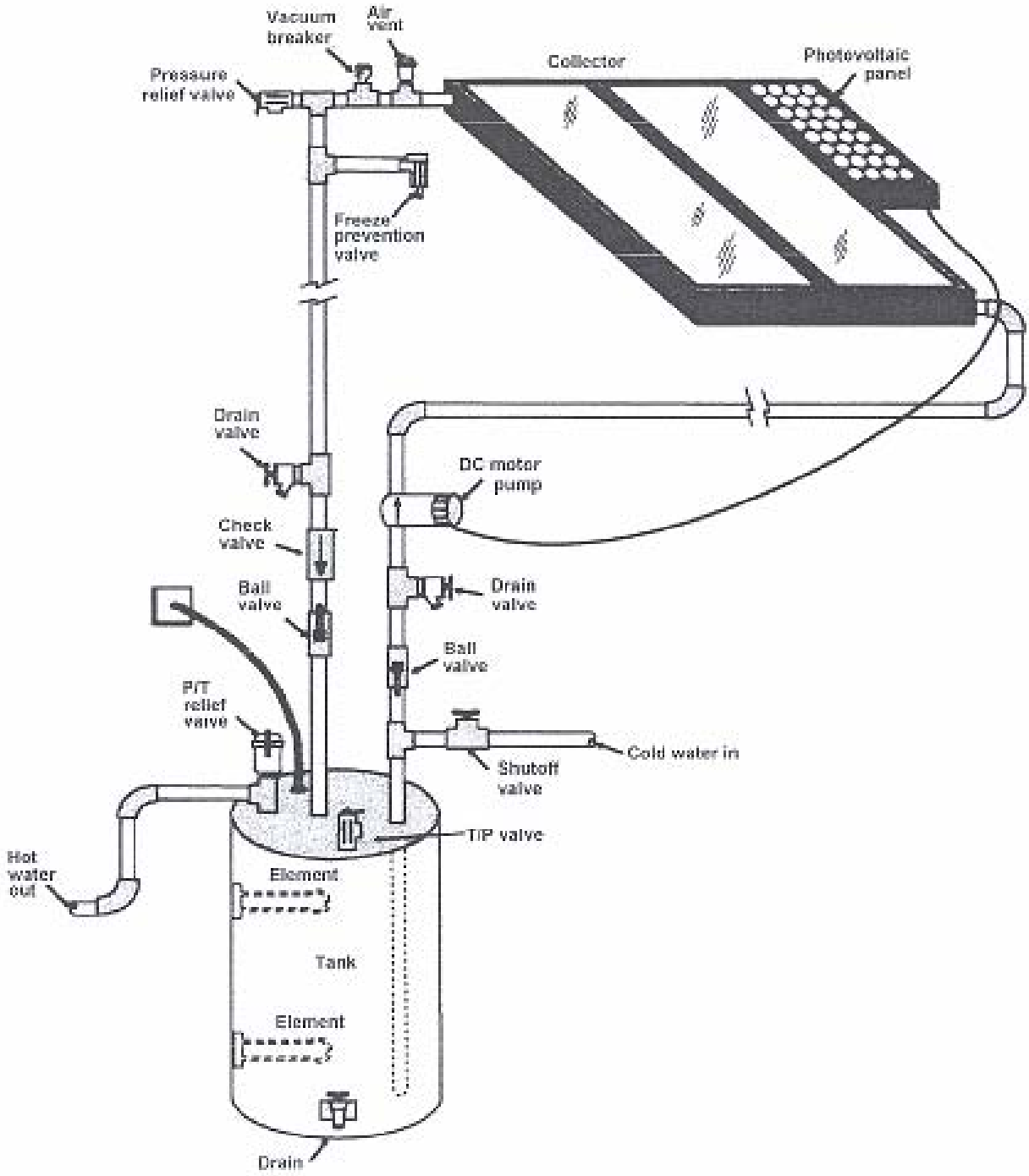

Figure 5.5 – Active direct system with photovoltaic control

 © UNBS 2009 – All rights reserved

5.2.2.3 Timer - controlled

This control method is used in tropical climates where temperatures are mid year-round and significant amounts of solar energy are available almost everyday. In a timer controlled system (Figure 5.6), a timer turns on a pump in mid morning and switches it off in late afternoon. To ensure that the heated water stratifies at he top of the storage tank, the system uses a very small (≤ 10W) pump. The collector feed and return lines are both connected through the use of a special valve at the bottom of the storage tank so only the coldest water from the tank flows through the solar collector.

Timer controlled systems could conceivably operate during rain or overcast conditions, so care must be taken to ensure the supply and return lines to the collector are located near the bottom of the storage tank. Therefore, if the pump operates during a cloudy day, only a small amount of the water at the very bottom of the tank will be circulated through the collector. This prevents potential major tank heat loss.

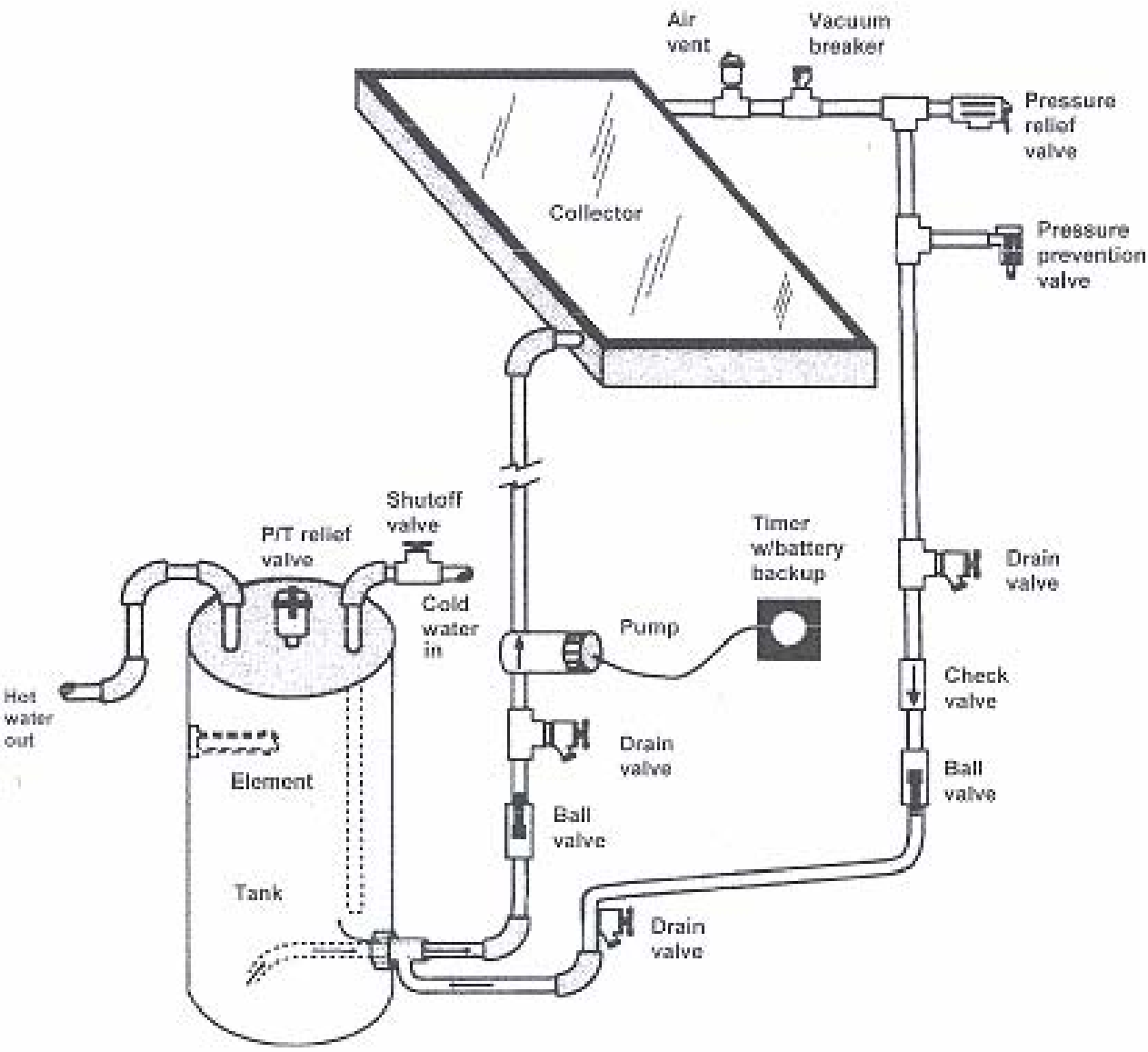

Figure 5.6 – Active direct system with timer control

© UNBS 2009 – All rights reserved

5.2.3 Active indirect systems

Indirect systems are typically used in areas of freezing temperatures or areas that have water that is very high in mineral content. The combination of high dissolved minerals and high temperatures produced by the solar system can accelerate scale building in system piping, fittings, and valves.

Like direct system, active indirect systems employ a solar collector, a circulating pump, a potable water storage tank and a variety of ancillary valves. Unlike direct systems, indirect systems also incorporate a heat exchange mechanism that transfers heat from the freeze-proof heat-collecting fluid to the potable water in the storage tank. Active systems are differentiated principally by the type of heat exchanger, controller, and heat collection fluid used.

5.2.3.1 Indirect pressurized system

In an indirect pressurized system (Figure 5.7), the heat transfer fluid provides freeze protection at low temperatures. A differential or PV controller activates the circular to move the fluid through the collector. A heat exchanger transfers the heat from the heat transfer medium to the potable water. The heat exchanger may be external to the storage tank, coiled around the outside lower half of the tank, or immersed inside the tank. A double wall heat exchanger is always used in systems that se toxic heat transfer fluids. For systems using non-toxic heat transfer fluids, a single wall heat exchanger is acceptable. An expansion tank on the solar loop compensates for the heat transfer fluid's expansion and contraction. In addition, these systems require fill and drain valves for adding and servicing heat transfer fluids.

 © UNBS 2009 – All rights reserved

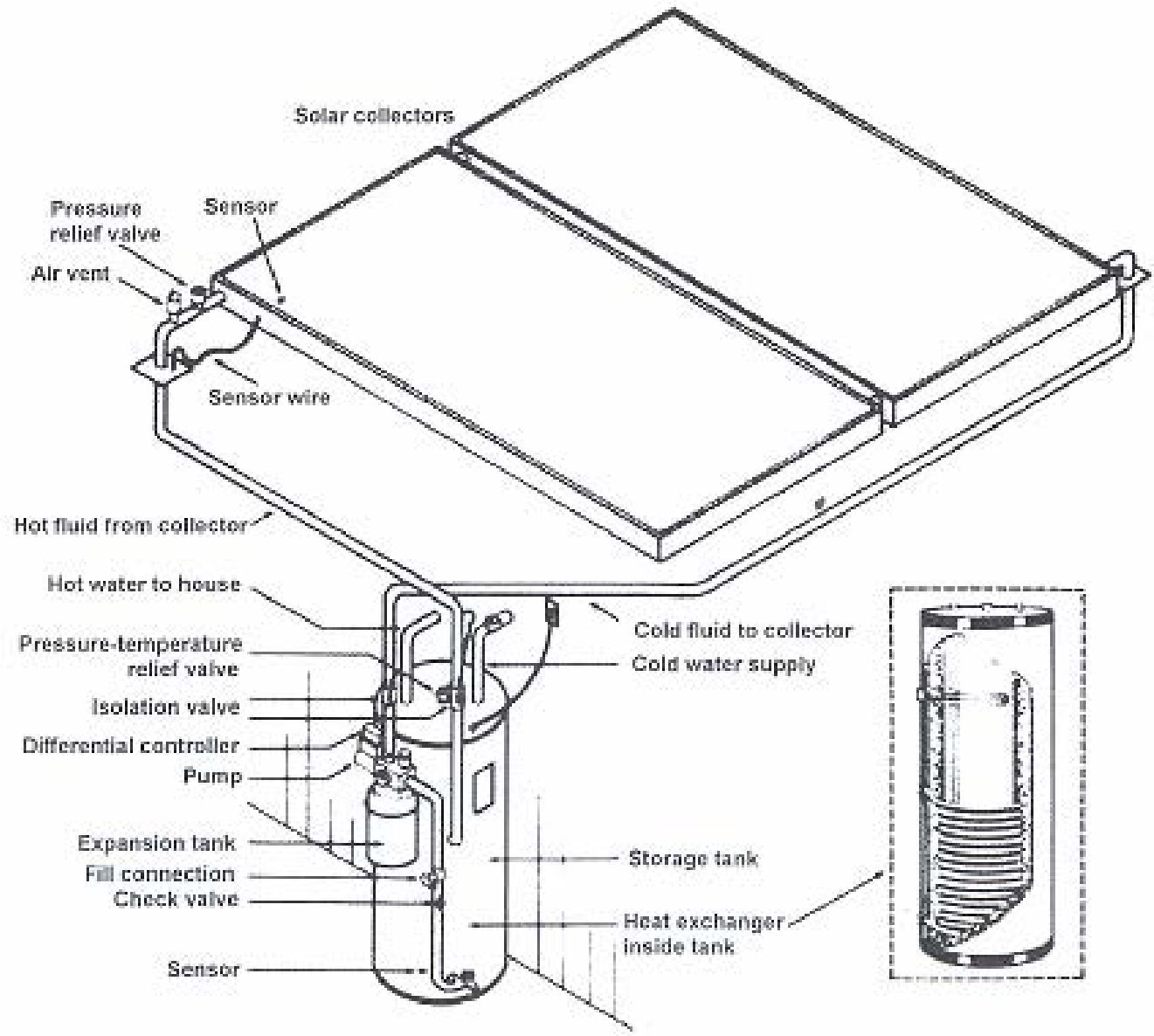

Figure 5.7 – Active indirect system with tank internal heat exchanger

5.2.3.2 Drainback system

Drainback systems offer freeze protection and high-limit protection because the collectors empty by gravity when the system pump is not operating. Since these differentially controlled systems often use distilled water as the heat collection fluid, they offer improved heat transfer to the potable water. When installed correctly, these systems also provide a fail-safe method for protecting the collectors and piping from freeze damage. Each time the differentially controlled pump shuts off, all fluid in the slightly tilted collector and pipes drains into an insulated reservoir tank located in the building's interior. In some systems, the heat exchanger is incorporated in the drainback reservoir; in others, the heat exchanger may be external or inside the storage tank. This system does not require air vents or vacuum breakers; instead, the piping contains air that should not be added or released.

Drainback systems have a measured amount of air and a measured amount of water in the system. The air is transferred to the reservoir when the pump is running and the water fills the collector. The pump is never without water since water is returning from the collector loop. When the pump shuts off, the air in the reservoir is forced up and into the top of the collector by the water draining back into the reservoir from the bottom of the collector. Several other special characteristics of drainback systems include:

© UNBS 2009 – All rights reserved

- Pimps must be sized correctly to overcome gravity and friction losses

- Since the system is not pressurized, expansion tanks, check valves or fill and drain valves are not required

- Collectors and pipe drains must be installed to allow proper and unimpeded drainage back to the drainback reservoir

5.2.4 Passive direct and indirect systems

Passive systems use no pumps or controllers. Instead, they rely on convection either to move water between the collector and storage tank in a thermosiphon system or to stratify heated water within an integral collector system. Most passive systems are direct; that is, the potable water directly collects the sun's heat in the collector.

When a fluid in the collector is hotter than the water in the preheat vessel, flow occurs by natural convection, transferring heat from the collector to the preheat vessel.

This type of system has the following limitations:

a) The collector has to be sited sufficiently below the preheat vessel to promote natural circulation when the collector is hotter than the store.

b) Freeze protection in the direct gravity system cannot be readily achieved.

c) All pipe work should be of minimal length and of sufficient bore to ensure adequate flow.

d) There should be sufficient rise on all pipe runs to prevent air locks.

e) A non-return valve fitted to prevent reverse circulation would need to have a very low pressure drop for forward flow.

Following are descriptions of the most common types of passive systems.

5.2.4.1 Thermosiphon system, direct or indirect

In a thermosiphon system (Figure 5.8) the water storage tank is located above the collector. Cold water from the bottom of the thermosiphon system's tank flows through a pipe to the bottom of the solar collector. As the sun shines on the collector, the heated water expands slightly and becomes lighter than the cold water. Heavier, denser cold water from the tank flows into the collector inlet, which pushes the lighter, heated water through the collector outlet and up into the top half of the storage tank. This process of displacement provides a tank full of hot water at the end of the day. The solar heated water is drawn from the elevated tank either directly to the hot water service or to an interior auxiliary tank. Some thermosiphon systems (Figure 5.9) include a heat exchanger in or around the tank and an antifreeze solution to avoid freeze problems.

 © UNBS 2009 – All rights reserved

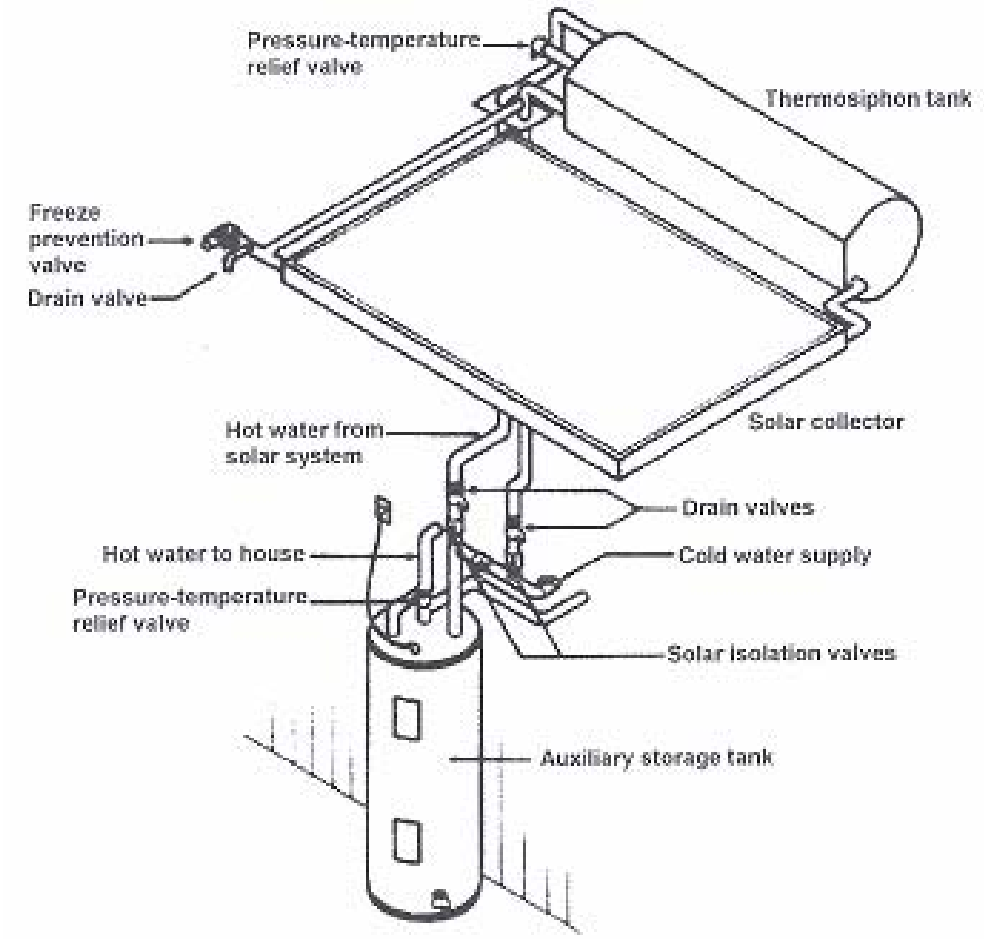

Figure 5.8 – Direct thermosiphon system

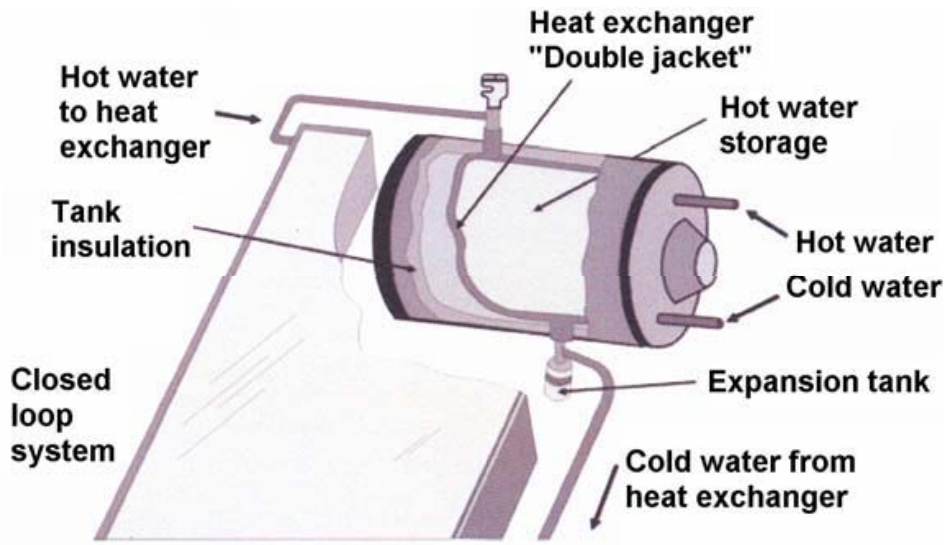

Figure 5.9 – Indirect thermosiphon system

5.2.4.2 Integral collector storage (ICS) system

In other solar water heating systems the collector and storage tank are separate components. In an integral collector storage system, (Figure 5.10 and 5.11) both collection and solar storage are combined within a single unit. Most ICS systems store potable water inside several tanks within the collector unit. The entire unit

© UNBS 2009 – All rights reserved

is exposed to solar energy throughout the day. The resulting water is drawn off either directly to the service location or as replacement hot water to an auxiliary storage tank as water is drawn for use.

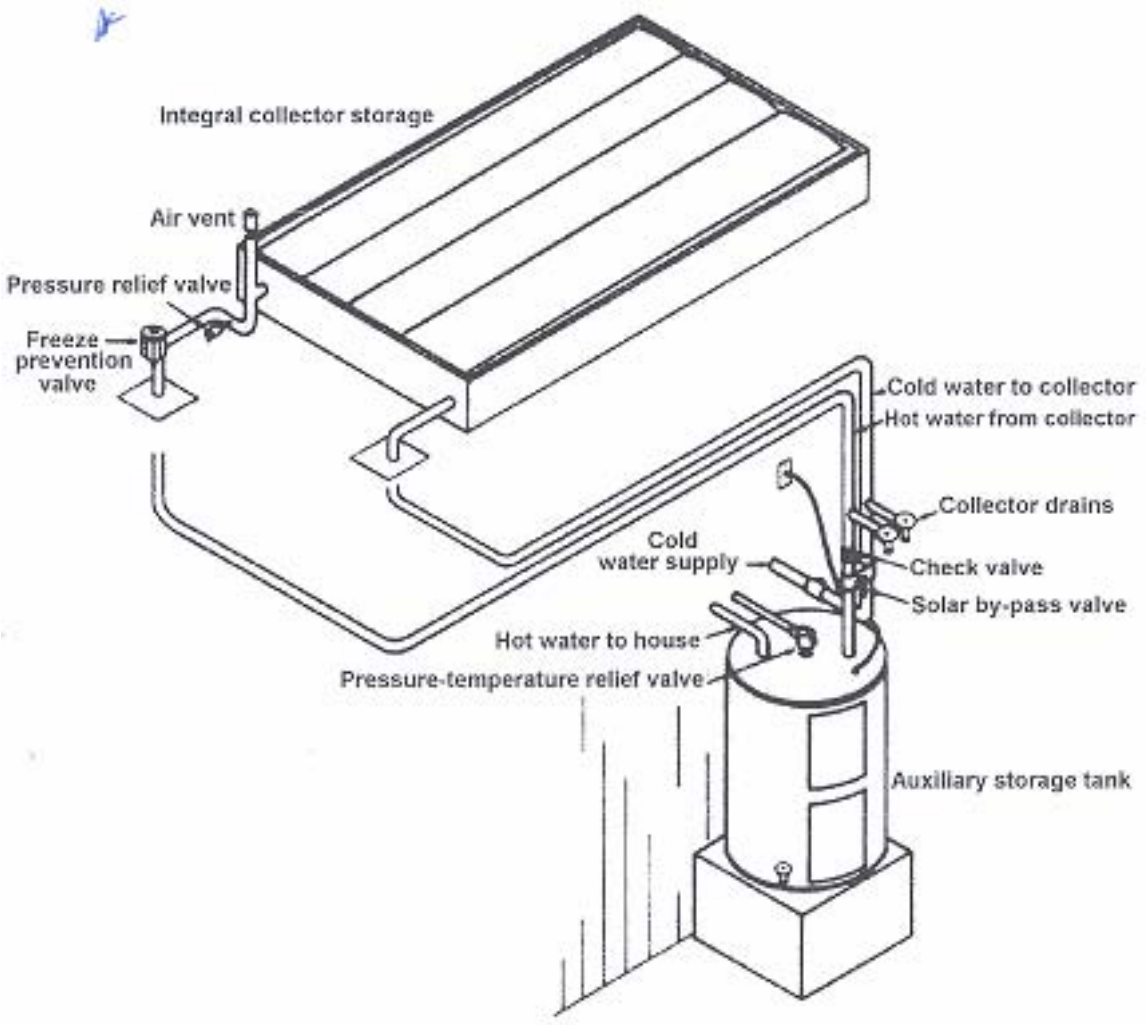

Figure 5.10 – Integral collector storage (ICS) system

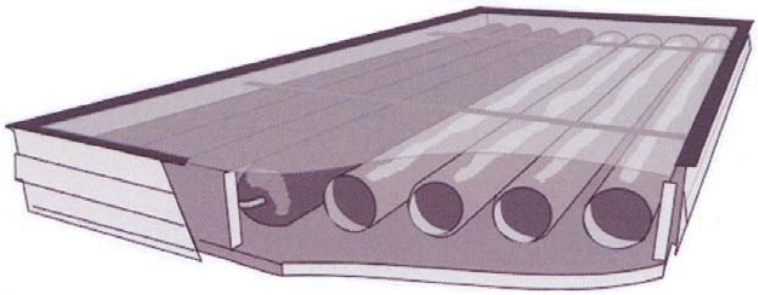

Figure 5.11 – Cutaway of an ICS system

5.2.4.3 Batch system

The simplest of all solar water heating systems is a batch system (Figure 5.12). it is simply one or several storage tanks coated with a black, solar-absorbing material in an enclosure with glazing across the top and insulation around the other sides. It is the simplest solar system to make and is quite poplar with do-it-yourselves. When exposed to direct sun during the day, the tank transfers the heat it absorbs to the water it

 © UNBS 2009 – All rights reserved

holds. The heated water can be drawn for service directly from the tank or it can replace hot water that is drawn from an interior tank inside the residence.

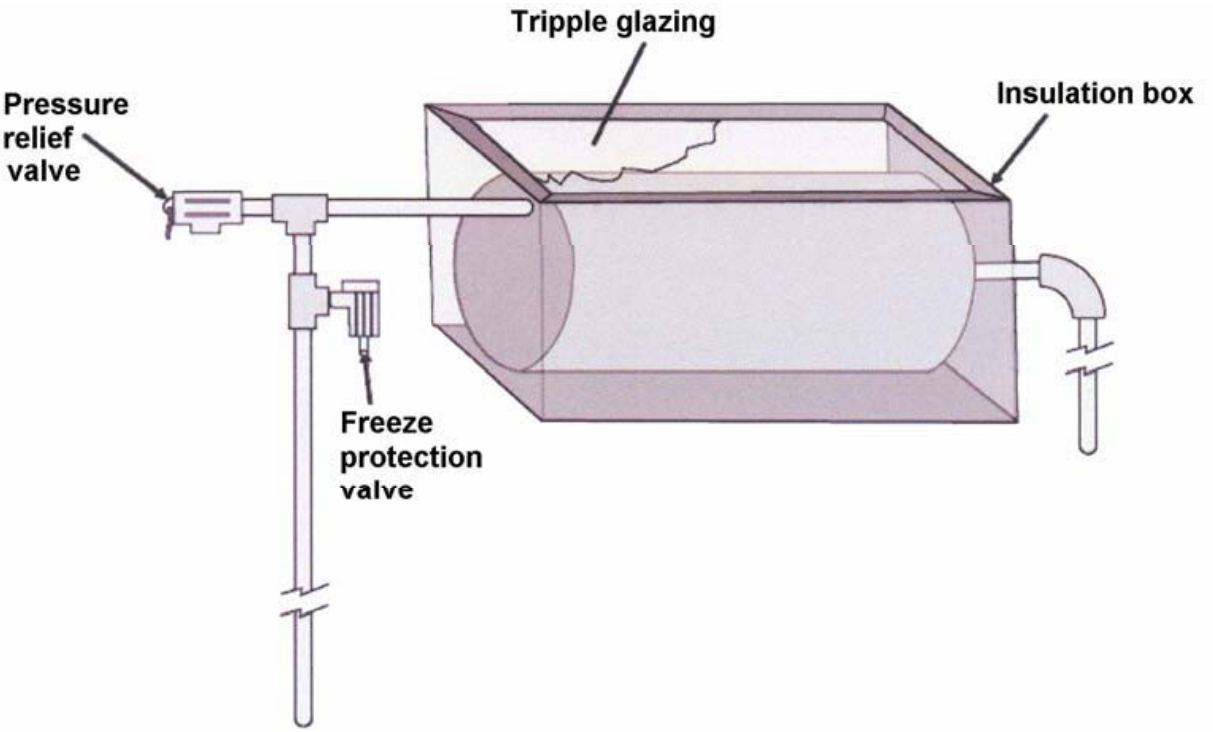

Figure 5.12 – Batch solar water heater

5.3 Freeze protection

Freeze protection mechanisms prevent damage to system components. There are four basic methods used to prevent freezing. These include:

1. Indirect antifreeze fluid circulation
2. Draining
3. Water flow
4. Thermal mass
5. Auxiliary heater

Except for solar systems in the tropics, all systems require some type of freeze protection method. The following examples are some of the more common methods used to prevent freezing. Systems may employ one or more of the following methods of freeze protection.

5.3.1 Indirect antifreeze fluid circulation

Indirect heat exchange systems use a heat-transfer fluid that provides freeze protection in very low temperatures. The antifreeze solution circulates in a closed loop through the collector and heat exchanger. This provides protection to the collector and exterior piping during freezing temperatures.

5.3.2 Draining

Direct systems can be protected from freezing by removing all the water from the collector and the exposed piping. This can be done manually or automatically by one of two methods: drain down or drain back.

a) Automatic drain-down

In a drain down system (Figure 5.13), sensors and a controller activate one or more automatic valves hat isolate the collector loop from the tank. The automatic valve should be installed to allow collector

© UNBS 2009 – All rights reserved

loop drainage when power to the electrically operated valve is interrupted. The collectors and piping for these systems must be installed so that no gravity traps or low pots occur so that the collector loop fluid will drain totally by gravity.

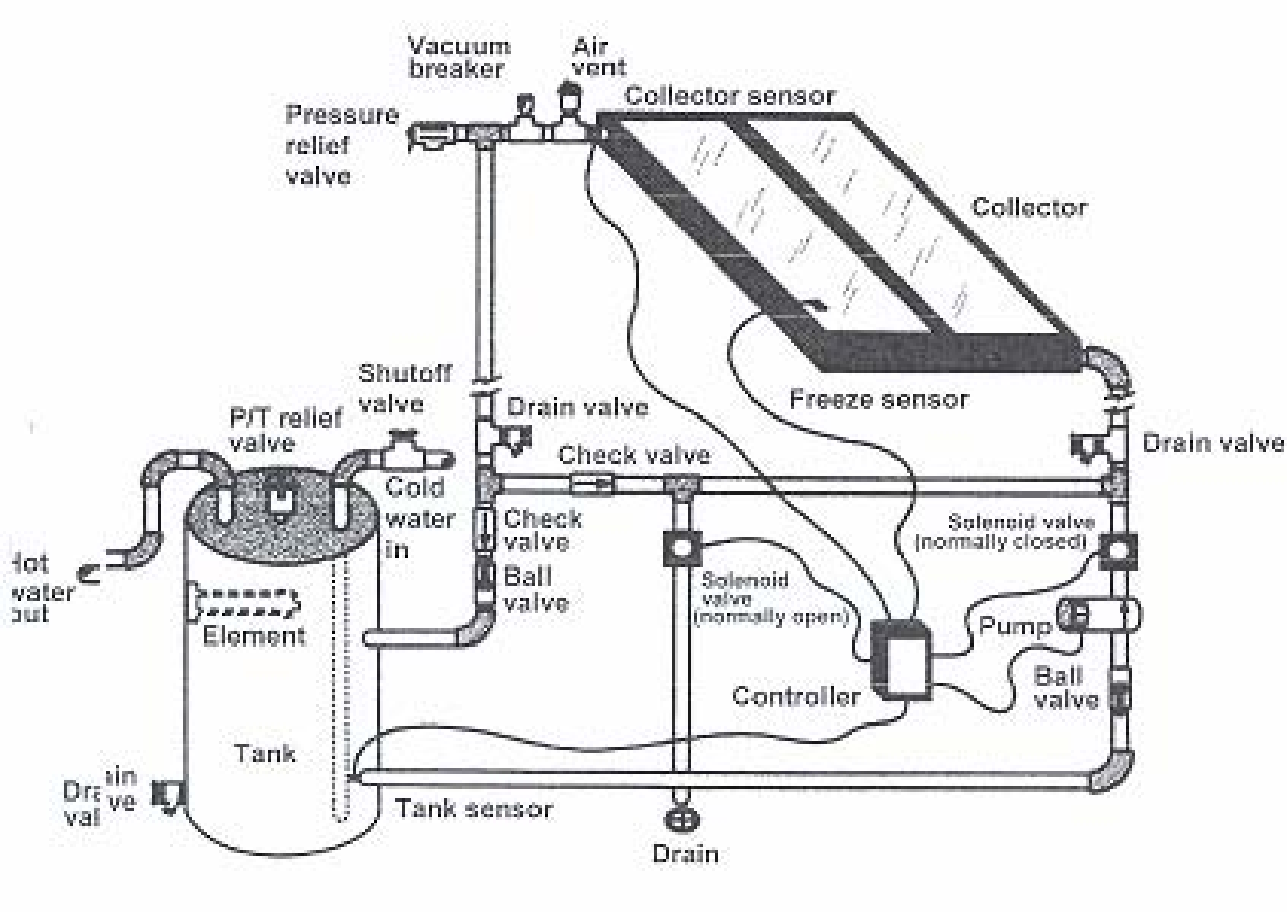

Figure 5.13- Drain-down system configuration

b) Manual drain-down

Systems can also be designed to be manually drained. The system must have isolation valves between the collector and the storage tank and drain valves on the supply and return lines. The manual draining operation must include shut off of any system controller and circulating pump. It is best to keep he drain valves open when the collectors are drained. A leak or failure of the isolation valve can provide a path for water to flow back to the solar collector and result in freeze damage.

Complete draining requires both properly sloped piping and a means for air to enter the system. The use of a vacuum breaker will ensure that the collector loop drains properly. In turn, refilling after draining requires a method to allow air to escape at the high point of the system. A properly installed air vent will provide a means of allowing air to be purged automatically from the system.

c) Drain-back

In drain-back systems (Figure 5.14), a reservoir collects the heat-transfer fluid (usually distilled water) that drains from the collector loop each time the pump turns off. When the pump turns on, it recirculates this same fluid. Generally, a drain back system uses a heat exchanger to transfer heat from the collector fluid to the potable water.

The pump used in these drain-back systems must be capable of overcoming fairly large static heads, since the collector may be mounted several stories above the pump. The pump must be installed in such a way that it is below the low-water mark when liquid is not circulating. As in drain down

 © UNBS 2009 – All rights reserved

systems, the collectors and piping for drain back systems must be installed in a way allows no gravity traps or low spots to prevent the drain back of the heat-transfer fluid.

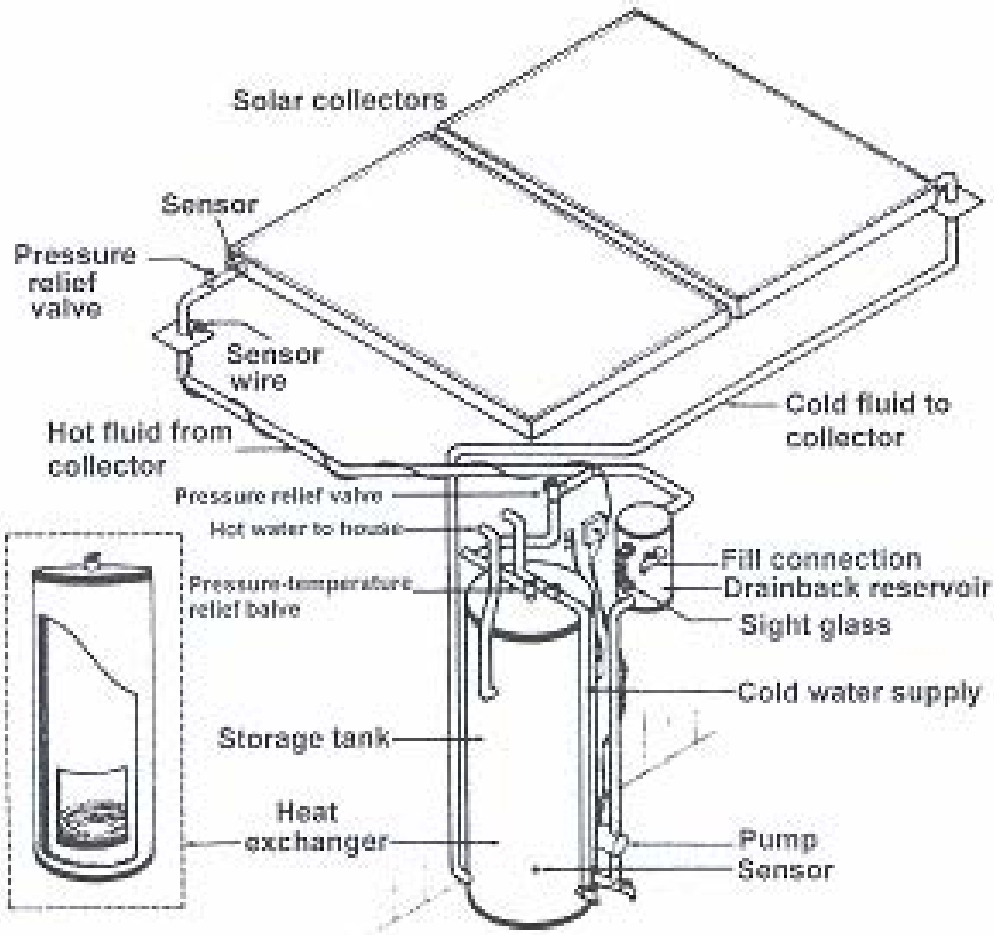

Figure 5.14 – Drain-back system with internal tank heat exchanger

Water flow

Freeze prevention may be provided by moving warm from the bottom of the tank through the collector. This movement can be accomplished by recirculation or use of freeze-protection valves.

a) Recirculation

In direct systems, recirculation may be where the threat of freeze damage is infrequent. For recirculation, a freeze sensor is connected to the controller to turn on the pump whenever the collector temperature approaches freezing. For systems that use a separate freeze sensor, the freeze sensor should be placed on the collector plate at the middle or bottom of the collector (away from the collector inlet) so that it will sense the coldest temperature of the collector. Another option is to turn the pump on manually during freeze conditions.

Because the pump requires electric power, this method will fail when a power outage and freeze occur simultaneously. At such a time, the collector must be drained manually.

b) Freeze protection valves

A freeze protection valve (Figure 5.15), set to open before freezing temperatures, is installed on the collector return plumbing line just beyond where the line penetrates the roof. When the valve registers a set temperature, it opens and warm water bleeds through the collector and out the

© UNBS 2009 – All rights reserved

valve to protect the collector and collector loop piping from freezing. Once the valve registers warmer temperatures (from the tank water being circulated through the valve), it closes. This action is repeated throughout the freezing conditions. The valve may be controlled by a spring-loaded thermostat or a bimetallic switch. Figure 5.16 shows where a freeze-protection valve is typically located on a solar DHW system.

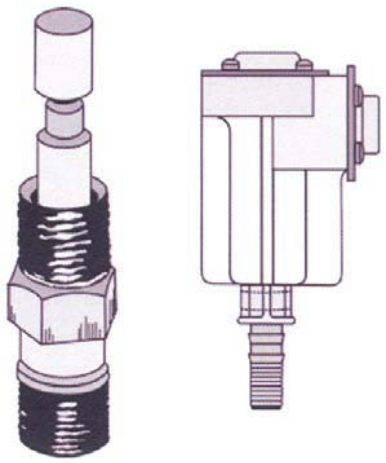

Figure 5.15 – Freeze protection valves

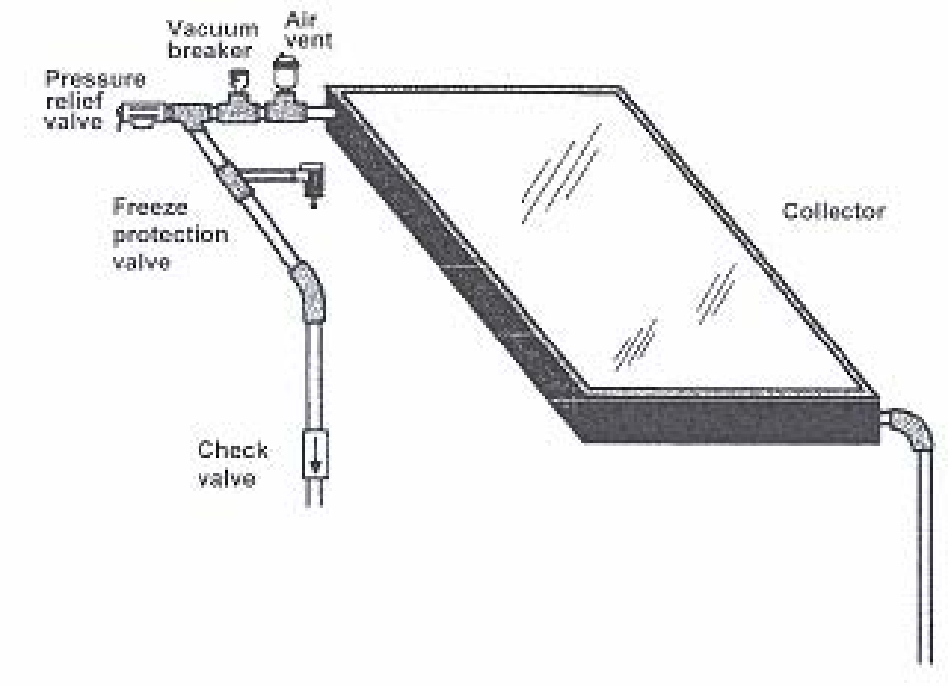

Figure 5.16 – Location for freeze protection valve

Freeze-protection valves require water pressure to force water through the valve (and in turn through the collector and associated piping) when activated. If these valves are installed on well water or cistern systems, low-pressure relief valves should also be installed on the system. The valve will open and drain the collector and collector loop when power outages create low pressures.

A check valve shall be used in all systems with freeze-protection valves. They are installed in the collector loop return line (See Figure 5.16). To protect the absorber plate, water must flow through all the pipes. The check valve prevents tank water from flowing straight from the tank to the freeze valve by way of the return line, thus bypassing flow through the collector.

 © UNBS 2009 – All rights reserved

5.3.4 Thermal mass

When used in milder climates, integral collector storage and batch type solar systems are protected from freezing by the large thermal mass in their collectors. Nevertheless, special care must be taken to protect exterior and attic collector loop piping. Any thermal mass protected system can eventually lose heat and freeze. The size of the collector tanks, the climatic and geographical location, local winter temperatures, and the length of the freeze all play a factor in determining how effective thermal mass will be as a freeze protection option.

5.3.5 Auxiliary heating

A less commonly used freeze-protection option is to use heat tape or electrical devices that are incorporated in the collector and collector loop piping. During freezing periods, these are activated to provide warmth to the collector and piping. As in recirculation, this relies on the continued availability of electric power during freezes.

6 Components for solar water heating systems

6.1 General

This clause describes the system components and related control functions that are required to collect, transport, store, and convert the solar energy for typical domestic hot water systems. Active systems need controls for pump operation and valves for safety and proper operation. Passive systems utilize many of the same components but in some cases for different reasons. Table 6.1 shows the recommended system components and related control functions that are required for solar hot water systems (see 5.2.2)

Table 1 – Solar water heating system components

Component		Function
1	Solar collector	Convert radiant energy into thermal energy
2	Solar storage tank	Accumulate thermal energy in the form of solar heated water to supply domestic needs
3	Insulation	Minimize thermal losses from components
4	Piping fittings	Interconnect components and convey heat transfer fluid
5	Mixing valve	Limit temperature of domestic hot water delivered for personal use
6	Temperature and pressure relief valve	Automatically relieves pressure if temperature and/or pressure maxima are exceeded
7	Auxiliary heat source	Supplements solar energy to provide adequate hot water
8	Pump	Circulate liquid
9	Controller	Controls the collection and distribution of thermal energy within the solar domestic hot water system and may provide limited safety functions
10	Auxiliary storage tank and heat source	Supplements solar energy to provide hot water and storage
11	Heat exchanger (internal or external)	Transfer thermal energy between physically separated fluids
12	Air duct	Interconnect collectors and heat exchanger in system employing air as transfer medium
13	Blower	Circulate air
14	Expansion tank	Protect system from pressure damage created by expansion of heat transfer liquid
15	Heat transfer fluid	Transports thermal energy
16	Pressure relief valve	Automatically relieves pressure if maximum is exceeded
17	Check valve	Prevent reverse liquid flow
18	Vent valve	Release trapped air
19	Drain valve	To drain fluid passages of liquid; manual or automatic
20	Backflow preventer	To prevent backflow of nonpotable fluid into potable water supply
21	Vacuum breaker	To relieve a vacuum by permitting air into a system
22	Air damper	Control air flow

© UNBS 2009 – All rights reserved

23	Shutoff valves	To isolate components, manual or automatic
24	Temperature sensor	Senses fluid temperature to operate controller

6.2 Collectors

Solar collectors capture the sun's electromagnetic energy and convert it to heat energy. While most direct and indirect active systems use flat-plate collectors, some systems employ evacuated tube collectors, or use collectors that incorporate one or more storage tanks.

6.2.1 Flat-plate collectors

Flat plate collectors are designed to heat water to medium temperatures (approximately 60 ^{o}C). As shown in Figure 6.1, flat-plate collectors typically include the following components:

a) Enclosure – A box or frame that holds all the components together. The material is chosen for its environmental durability as well as its structural characteristics

b) Glazing – A transparent cover over the enclosure that allows the sun's rays to pass through the absorber. Most glazing is glass but some designs use clear plastic. In general, the sun's heat energy passes quite easily through the glazing as short waves. Heat energy that re-radiates from the collector absorber is in long waves. Glass glazing prevents long waves from passing back through the glazing.

   Glazing also blocks air motion across the absorber, thereby reducing heat loss through convection. The glazing also serves as a transparent insulation that can be single or multiple layers. The more the layers the greater the insulation value, but multiple layers also decrease the amount of light that is transmitted through the layers of glazing.

c) Glazing flame – Attaches the glazing to the enclosure. Glazing gaskets prevent leakage around the glazing frame and allow for contraction and expansion.

d) Insulation – Material between the absorber and the surfaces it touches that blocks heat loss by conduction thereby reducing the heat loss from the collector enclosure. The insulation must be able to withstand extremely high temperatures, so insulations like Styrofoam are not suitable.

e) Absorber - A flat, usually metal surface inside the enclosure that, because of its physical properties, can absorb and transfer high levels of solar energy. The absorber material may be painted black with a semi-selective coating or it may be electroplated or chemically coated with a spectrally selective material (selective surface) that increases its solar absorption capacity by preventing heat from the re-radiating from the absorber.

f) Flow tubes – Highly conductive metal tubes across the absorber through which fluid flows, transferring heat from the absorber to the fluid. The heat transfer fluid tubes remove heat from the absorber. The collector may also incorporate headers, which are the fluid inlet and outlet tubes.

 © UNBS 2009 – All rights reserved

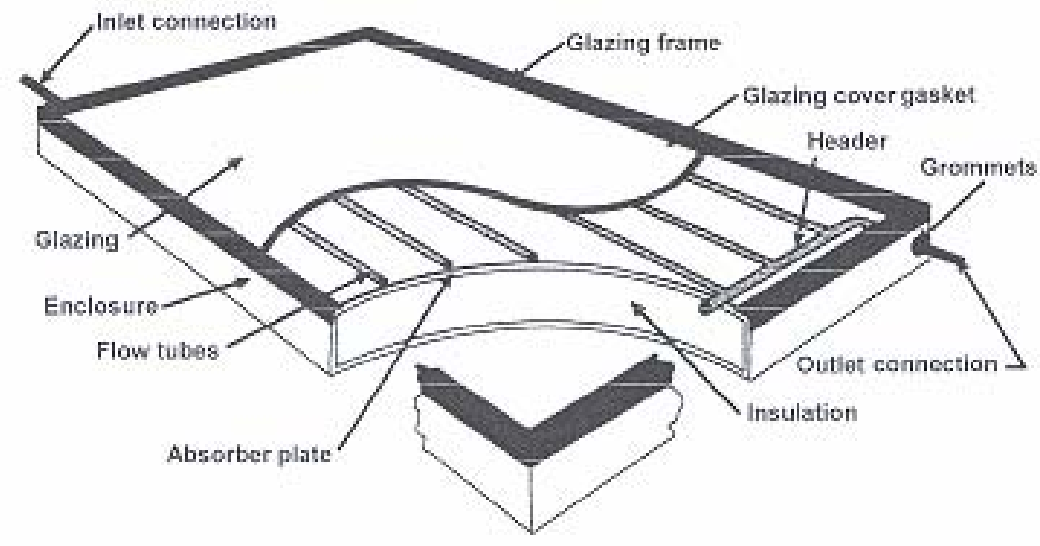

Figure 6.1 – Flat plate collector

6.2.2 Evacuated- tube collectors

Evacuated-tube collectors generally have a smaller solar collecting surface because this surface must be encased by an evacuated glass tube. They are designed to deliver higher temperatures (approximately 150 ^{o}C). The tubes themselves comprise of the following elements:

- Highly tempered glass vacuum tubes, which function as both glazing and insulation.

- An absorber surface inside the vacuum tube. The absorber is surrounded by a vacuum that greatly reduces heat losses.

In “flooded” evacuated-tube collectors (Figure 6.2) the absorber itself forms a tube through which the heat collection fluid is pumped. Flooded evacuated-tubes are typically used in passive thermosyphon systems.

In a “heat pipe” evacuated-tube collector (Figure 6.3), a flat absorber plate running the length of the tube covers a heat pipe filed with a fluid that evaporates at relatively low temperatures. As the fluid is heated, it evaporates and rises to the top of the tube. There it transfers the heat to water in a manifold. The condensed heat-collection fluid then returns by gravity to the bottom of the heat pipe. These systems can be active or passive.

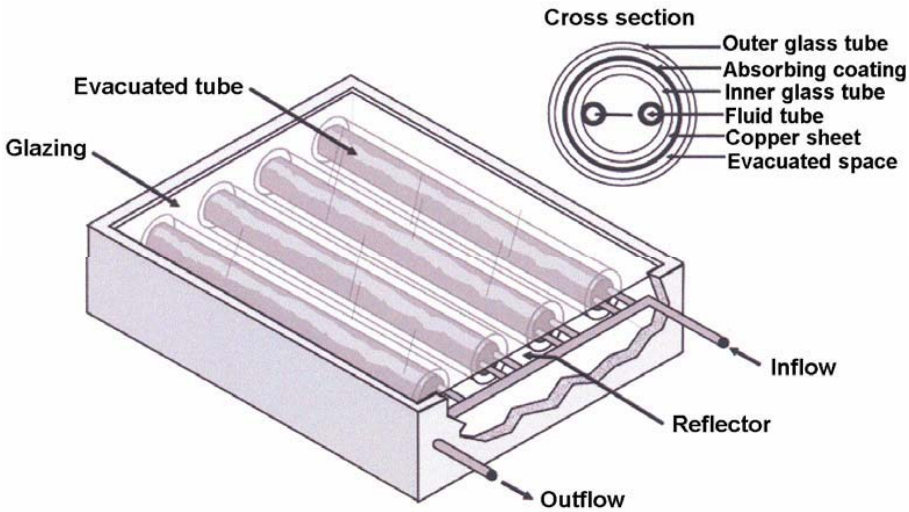

Figure 6.2 – Flooded evacuated-tube collector

© UNBS 2009 – All rights reserved

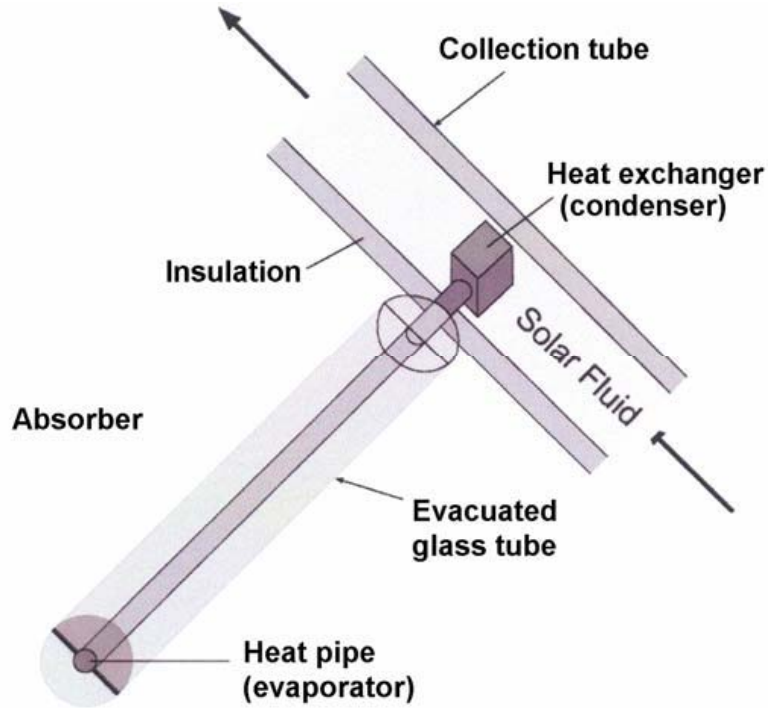

Figure 6.3 – Heat pipe evacuated –tube collector

6.2.3 Integral collectors

In integral collector storage (ICS) and batch solar water-heating systems, the collector functions as both solar absorber and water storage.

ICS collectors (Figure 6.4) generally incorporate 10 cm or larger diameter horizontal metal tanks connected in series by piping from a water inlet at the bottom of the tank to an outlet at the top. The tanks, which are coated with either a selective or moderately selective absorber finish, are enclosed in a highly insulated box covered with multiple glazing layers. The multiple glazing layers and selective coatings are designed to reduce the heat loss of water stored in the absorber.

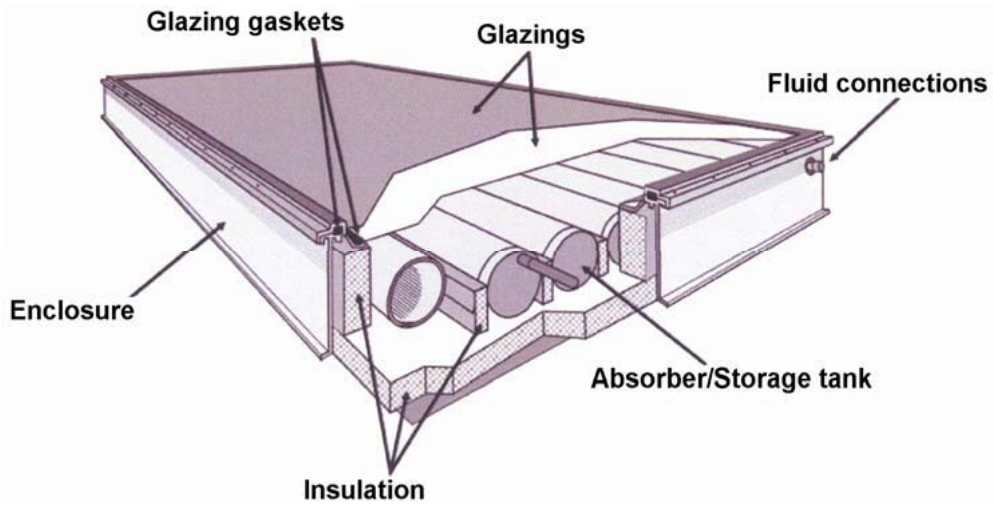

Figure 6.4 – ICS collector

The simplest of all water-heating collectors, a batch collector (Figure 6.5) usually is made of just one black – painted metal tank inside an insulated enclosure covered with some type of glazing.

 © UNBS 2009 – All rights reserved

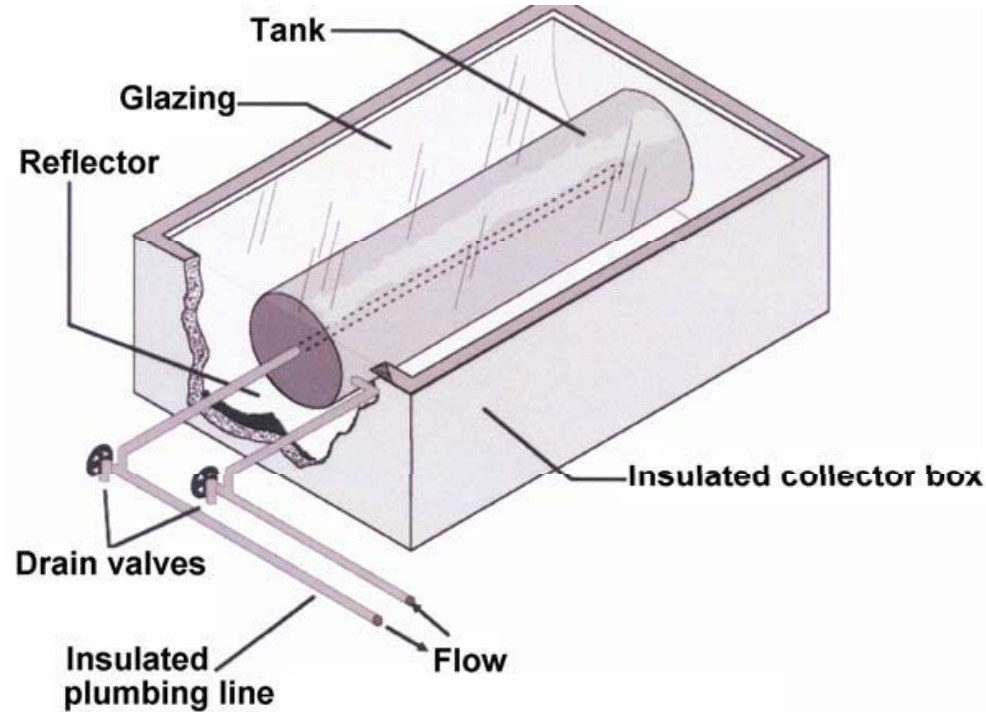

Figure 6.5 – Batch collector

6.3 Storage tanks

The storage tank holds the water that has been heated by the collector. The water can be stored in any vessel suitable for high temperatures. The tanks can be pressure rated depending on the application and whether or not a back-up heating system is used.

In subtropical and tropical climates, solar water heating systems usually have a single solar storage tank. This tank usually incorporates an electric heating element. Gas water heaters are not usually for solar storage. The reason for this is that the gas burner is at the bottom of the tank. As cold water enters the tank and activates the gas burner, the whole tank is heated and the gas heat reduces the contribution from the solar system. When gas water heaters are used for back-up, a thermosyphon or ICS system that preheats water entering the gas back-up heater may be used. .A two-tank system may be used where the solar tank preheats the water for the gas back-up tank.

In colder regions and industrial applications, two tanks may be required to store sufficient solar-heated water over very cold or cloudy periods. In these cases a solar storage tank, to which the solar loop is plumped, is connected in a series to an auxiliary water heater or boiler that has “back-up” electric or gas heating. This auxiliary tank or boiler provides hot water in the event there is insufficient solar-heated water. Solar thermal systems that supply heated water for applications other than potable domestic water, such as space heating, may employ more than one storage tank.

The most popular tanks are made of steel with an inner glass, stone or epoxy lining to protect the steel from galvanic corrosion caused by the water’s chemistry. (Dissolved oxygen in the water becomes corrosive to untreated steel). Steel tanks also have an internal aluminium or magnesium “sacrificial” anode rod to attract the oxygen away from the steel. Stone-lined tanks and stainless steel or copper tanks normally do not require anode rods.

Where hard or highly conductive water will be stored in the tank, the anode rod should be replaced periodically. Even in areas with good quality water supplies, the solar storage (an auxiliary) tank should be drained periodically to remove sediment build-up.

Solar storage tanks should be well insulated, especially if they are installed in an air conditioned space. If they are installed outside a building, they should also be well protected from environmental conditions and

© UNBS 2009 – All rights reserved

corrosion, including ultraviolet degradation, by an ultraviolet (UV) resistant plastic, stainless steel or aluminium jacket. Painted steel or powder coated steel jacket materials on storage tanks require continuous maintenance in coastal or high moisture areas. If the system design requires that tanks be buried below ground, they should have additional insulation and accessible ports for valves and wiring connections. Heat loss from buried storage tanks is accelerated by high water tables or wet ground. Ground conditions should be considered in heat loss calculations.

6.3.1 Single tank systems

The design of conventional water heater tanks encourages mixing water in the tank, producing a tank full of water at the highest selected temperature. For this reason, natural gas and propane system burners are located at the bottom of the tank and conventional electric units have heating elements located in both the top and bottom third of the tank.

6.3.1.1 Electric

Solar systems with single tanks (Figure 6.6) are designed to encourage temperature stratification so that when water is drawn for service, it is supplied from the hottest stratum in the tank (top of tank). For a solar system tank that normally contains a heating element, the element is deliberately located at the upper third of the tank. The electric element functions as back-up when solar energy is not available or when hot water demand exceeds the solar-heated supply. To further encourage stratification of cold and hot water in a storage tank, the cold supply water inlet is located at the bottom of the tank, as is the opening of the collector feed tube. In addition, the collector return tube opens below the heating element, returning the solar heated water to the hottest stratum.

6.3.1.2 Gas

Gas back-up systems may use passive (thermosyphon or ICS) solar preheating plumbed in series for proper operation. Or two separate tanks may be used for active solar systems with gas back-up heating systems. The solar storage tank is piped in series to the auxiliary tank sending the hottest solar preheated water to the gas back-up tank. (See Figures 6.8a and 6.8b).

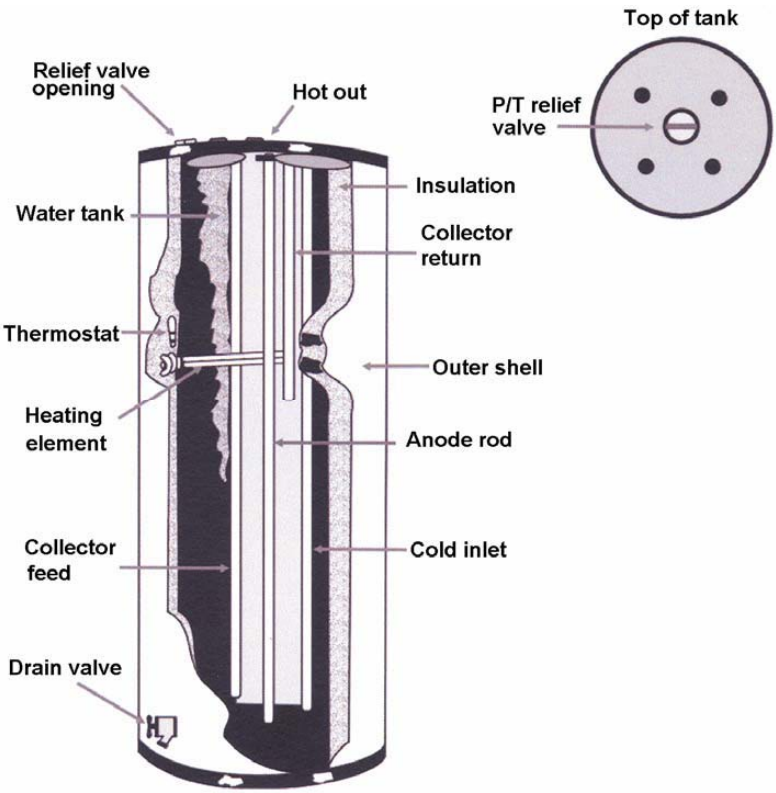

Figure 6.6 – Vertical solar storage tank

 © UNBS 2009 – All rights reserved

Depending on the system design, solar tanks may be vertical, as shown in Figure 6.6, or horizontal as shown in Figure 6.7. Stratification is generally better in a vertical tank than in a horizontal tank. Yet, aesthetics and mounting considerations favour the horizontal tank design if the tank is mounted on the roof as in a thermosiphon roof-mounted system.

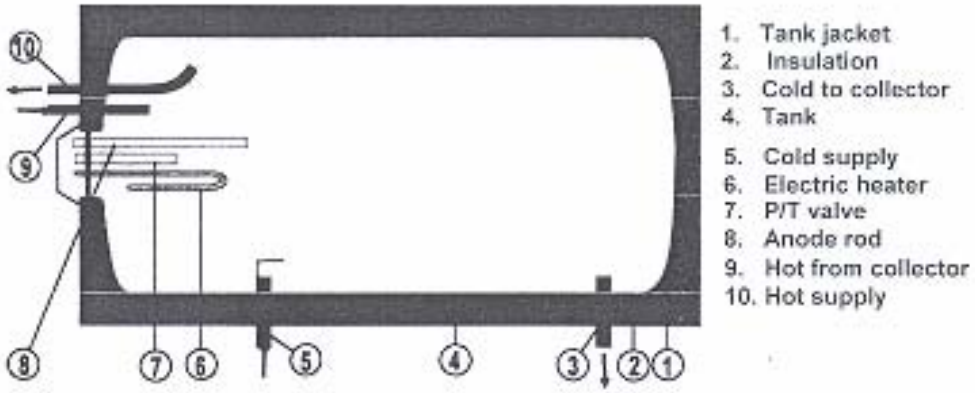

Figure 6.7 – Horizontal solar storage tank

6.3.2 Multiple – tank systems

In two-tank systems (Figures 6.8a and 6.8b), one tank provides storage for solar-heated water. It is plumbed directly to the solar collector and does not contain any back-up heating source. This solar storage tank is plumbed to a second tank, which contains an auxiliary power source that can be used when no solar energy is available. This type of configuration is most commonly used in residential and light commercial applications.

Larger commercial and industrial solar system storage tank strategies can incorporate a single large solar storage tank or multiple smaller solar storage tanks. In these systems, all the tanks are typically plumbed in parallel, thereby acting as a single storage mechanism. The fluid flow is balance so an equal amount of water enters each of the tanks as hot water is drawn for service. These storage tanks supply hot water directly to the back-up (auxiliary) heater or conventional commercial boiler. In certain situations, multiple tank storage systems use parallel piping between most of the tanks and series piping to a single tank with back-up capabilities.

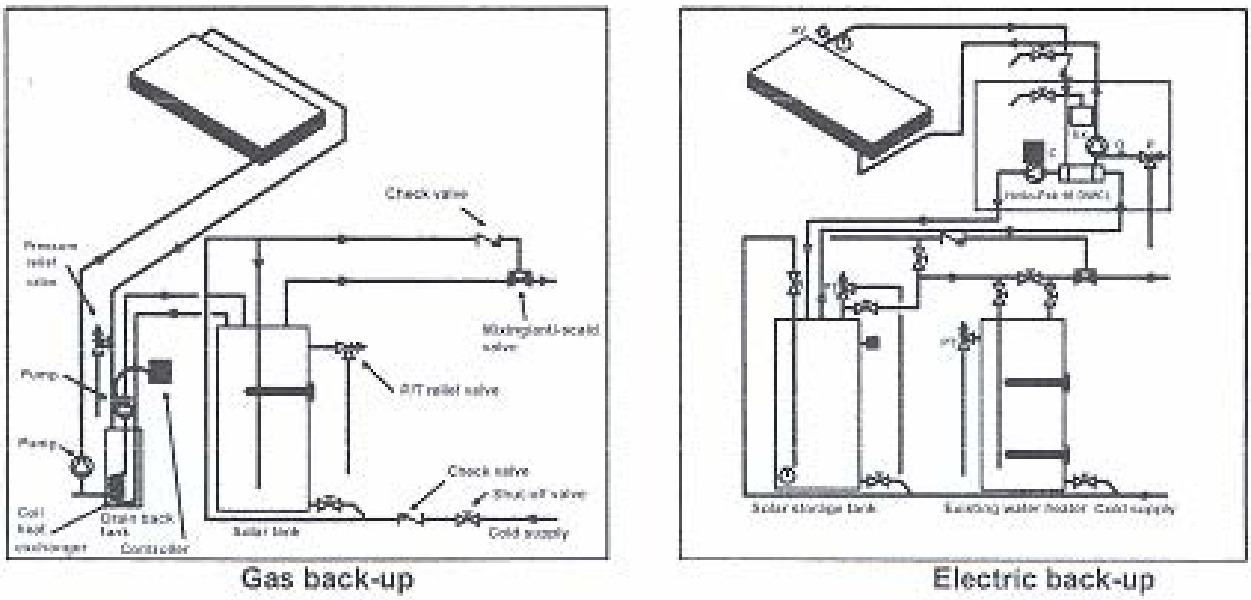

Figure 6.8a – Two-tank solar water heater storage

© UNBS 2009 – All rights reserved

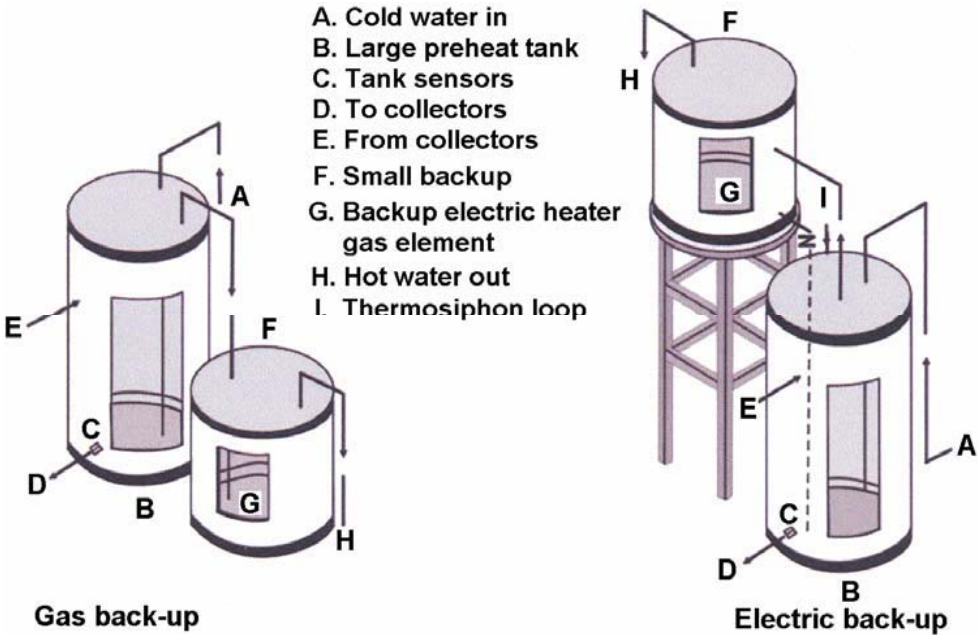

Figure 6.8b – Two –tank solar water heater storage

6.4 Pumps

An active system uses a pump or circulator (Figure 6.8a) to move the heat transfer fluid from the storage tank to the collector. In pressurized systems, the system is full of fluid and a circulator is used to move hot water or heat transfer fluid from the collector to the tank. Pumps are sized to overcome static and head pressure requirements in order to meet specific system design and performance flow rates. (It is advisable to refer the pump manufacturer's pump curve to determine the proper pump size)

Drain-back and other unpressurized solar water heating systems require a high head pump to lift the water from the storage vessel to the collector and force the air out of the collector or collector array. This requires a centrifugal pump or other pump that will provide adequate pressure.

Most active solar systems use centrifugal pumps. Pump selection depends on the following factors:

- System type (direct or indirect)
- Heat collection fluid
- Operating temperatures
- Required fluid flow rates
- Friction losses

The most common pump (circulator) used in solar systems is the "wet rotor" type in which the moving part of the pump, the rotor, is surrounded by liquid. The liquid acts as a lubricant during pump operation, negating the need for manual lubrication.

 © UNBS 2009 – All rights reserved

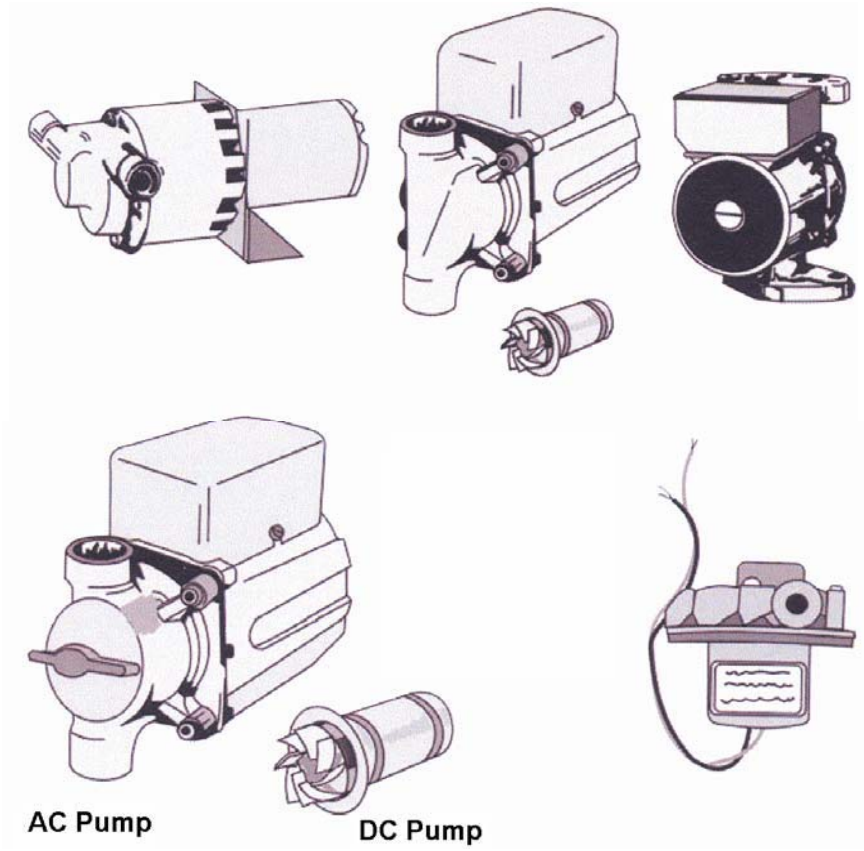

Figure 6.10 – Pumps used in solar water heating systems

Pumps used on active direct systems must have bronze or stainless steel housings and impellers to prevent corrosion from water chemistry. Simply put, using cast iron pumps in systems in which the potable water comes into contact with the pump will cause the cast iron to rust. Cast iron pumps can be used with certain heat transfer fluids used in indirect systems. Table 6.1 lists pump options for various applications.

Table 6.1 – Pump applications

Application	Pump type and size
Potable water, pressurized, direct active system	Bronze or stainless steel, low head
Potable water, pressurized, direct active drain-down system	Bronze or stainless steel, low to medium head
Potable fluids, unpressurized, drain-back	Bronze or stainless steel, low to high head
Glycol fluids, pressurized	Cast iron, low head
Glycol fluids, unpressurized	Cast iron, medium to high head

6.5 Piping

Piping provides the path for fluid transport in the system. The piping must be compatible with system temperatures, pressures and other components. Most systems use copper piping because of its durability, resistance to corrosion and ability to withstand very high temperatures. Type L, K or M is commonly used, depending on the application, local codes and traditions.

Copper, brass, and bronze are normally the only materials that should be used in active direct solar systems using potable water. In cases where galvanized piping already exists, it should either be replaced, or dielectric unions should be used to isolate the different metals. (refer to galvanised standard)

6.5.1 Pipe hangers

© UNBS 2009 – All rights reserved

When installing-long system piping runs, pipe hangers are commonly used for support. The piping, depending on the type, may be pliable due to high temperatures (temp ranges shud be included) and therefore, must be supported. Since the slope of the piping must be maintained for proper operation and drainage of many systems, pipe hanger are also required to properly orient the pipe runs.

6.5.2 Solder

Solder used in system piping shall comply with ISO 9453, ISO 9454 or ISO 12224 depending on the material to be soldered. Leaded solder should not be used in potable water system piping.

6.5.3 Incompatible materials

Corrosion caused by the contact between dissimilar metals is called galvanic corrosion. Such corrosion usually results in an accelerated rate of attack on only one of several dissimilar metals. In the language of the corrosion expert, the protected material – the one that remains virtually unattached – is called the cathode. The material that is attacked is called the anode.

Metals can be listed in a galvanic series that is useful in predicting which metals are acceptable for use in contact with one another and which materials are likely to be corroded. The following is a simplified galvanic table that can be used as a reference source.

CORRODED END – ANODIC
Magnesium
Zinc, Galvanised Steel
Aluminium
Mild Steel, cast iron
Lead, Tin
*Brass, Copper, Bronze
*Nickel-Silver, Copper-Nickel Alloys
*Monel
Stainless steel
PROTECTED END – CATHODIC

The coupling of two metals from different groups will result in accelerated corrosion of the metal higher in the series. The farther apart the metals are in the series, the greater the galvanic corrosion tendency. Material groups marked with an asterisk (*) have no strong tendency to produce galvanic action and from a practical standpoint are safe to use in contact with one another.

6.5.4 Pipe insulation

The most common type of pipe insulation used in solar systems is the closed cell flexible elastomeric foam type (rubber)(Figure 6.11). Plastic insulation such as polystyrene or polyethylene should never be used due to their low operating temperatures (Figure 6.12). All exterior piping insulation must be protected from environmental and ultraviolet ray degradation by using special ultraviolet ray resistant coatings, paints or shielded wraps.

 © UNBS 2009 – All rights reserved

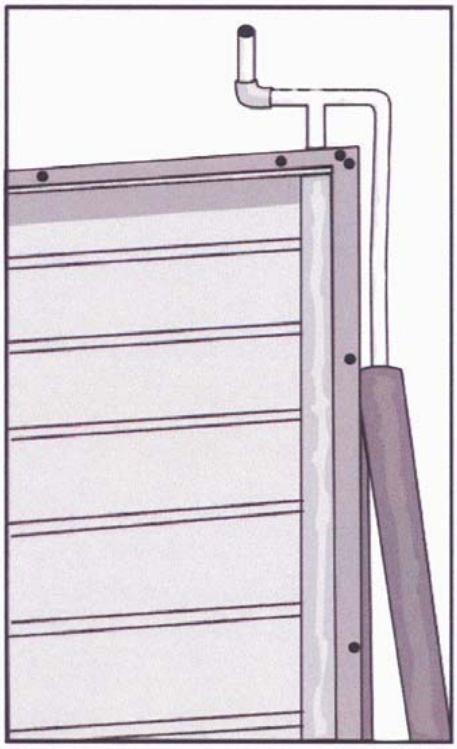

Figure 6.11 – Rubber insulation being installed

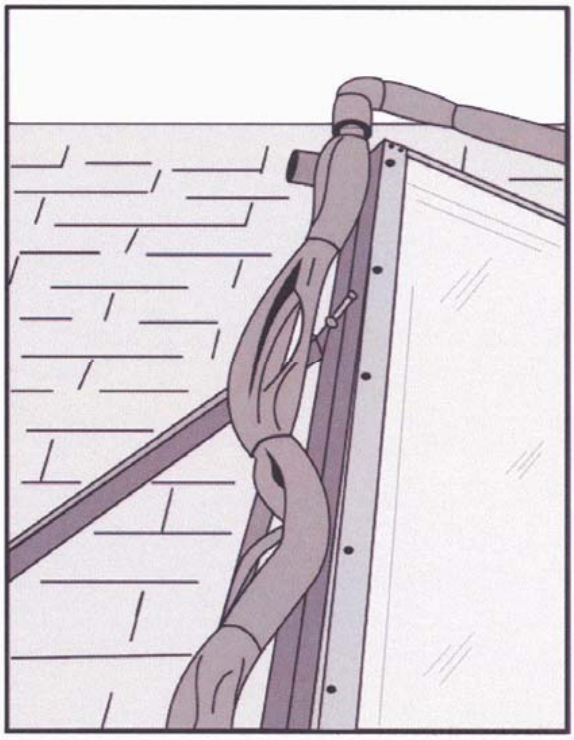

Figure 6.12 – Plastic insulation should not be used used in high temperature or external applications

6.6 Controls

6.6.1 General

In active solar water-heating systems, the controller acts as the “brains” of the system. When the controller determines that sufficient solar energy is available at the collector, it activates the pump to circulate water to the collector and back to the storage tank. The most frequently used types of controllers include differential, photovoltaic and timer.

Electronic differential temperature controllers are activated by sensors that detect the temperatures of the collector and the preheat vessel. The main components of a typical control system are:

a) a power source to provide supplies at the required voltages;

b) an electrically operated switch to control the supply to the pump;

c) temperature sensors to provide signals for operating the control;

d) a device, such as a bridge circuit, to compare the signals received from the sensors and to operate the pump switch. Control system functions may also include:

   1) preventing excessive cycling of the pump;

   2) operating draindown, mixing and by-pass valves;

   3) limiting water storage temperatures to safe values.

© UNBS 2009 – All rights reserved

6.6.2 Differential controller

Differential controllers (Figure 6.13) work in conjunction with two sensors (Figure 6.14) – one at or near the hottest point of the collector and another near the bottom of the storage tank. When the temperatures measured by two sensors reach a preset difference of 5 to 20 ^{o}C, the controller starts the pump. On many controllers, the installer has the added option of selecting the differential setting. For instance, the installer can set the differential at 9, 12, 15 or 20 ^{o}C depending on the characteristics of the system. For systems with long pipe runs, it is suggested that higher temperature differentials be used, systems with short pipe runs can use smaller differentials.

When the temperature difference between the sensors falls to about 3 to 5 oC, the controller stops the pump. The off temperature differential is usually set at the factory and cannot be adjusted by the installer.

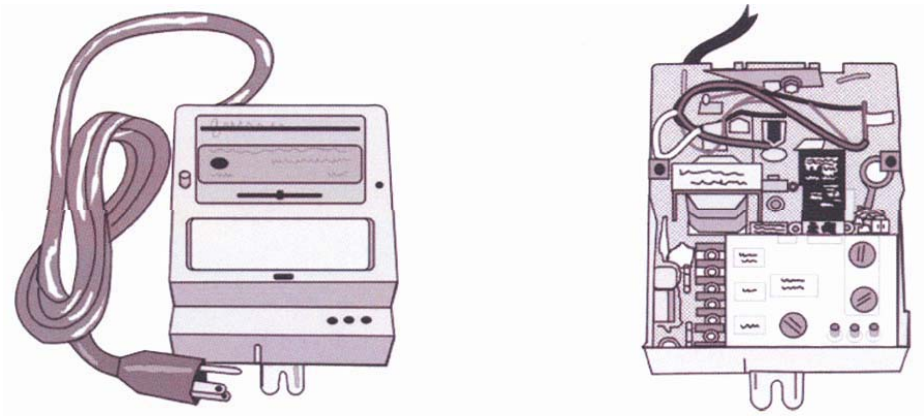

Figure 6.13 – Differential controller

Differential controllers commonly have an on, off and auto position switch. In the on position, the sensor signals (and their interaction with the controller) are ignored and the controller operates the pump on a continuous basis. In the off position, the sensor signals are also ignored and the pump remains turned off. In the auto position, the sensors and controller interact to control the operation of the pump.

Many differential controllers also incorporate a freeze control to activate the pump during freezing conditions. A manual adjustment must be made by the installer to activate the freeze control option. Always check the manufacturers instructions when installing solar controllers. Installer selected features may be required to activate the controller functions designed into the unit.

Some differential controller models also incorporate high temperature limit settings that turn the pump off when a preset tank temperature has been reached. It is important to remember this is the temperature of the sensor at the bottom of the tank – the top of the tank may be even hotter.

The sensors used with differential controllers are thermal resistors that change their electrical resistance with temperatures. They are commonly called thermistors. Understanding the relationship in a thermistor between electrical resistance and temperature is quite simple. It works in reverse. When the sensor's temperature increases, its resistance goes down. When its temperature decreased, its resistance increases.

 © UNBS 2009 – All rights reserved

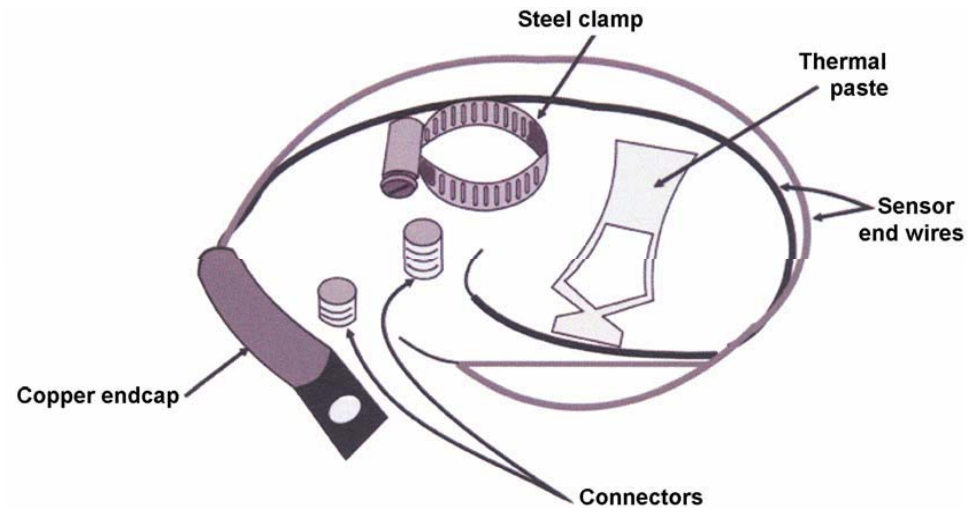

Figure 6.14 – Sensors

Thermistors come in both 10K and 3K –ohm types (K=1000). At 25 ^{o}C, a 10K thermistor should have a 1000 ohms resistance, while a 3K should have a 3000 ohms resistance. Currently, most controller manufacturer use 10K thermistors. A few manufacturers have used more accurate resistance temperature detectors (RTDs).

Special care must be made to avoid installing sensor wiring near sharp edges or close to 230V wiring as this could adversely affect the performance of the sensors and controller due to electrical interference. In addition, exterior runs of sensor wiring should also be protected from environmental degradation.

6.6.3 Photovoltaic (PV) controller

In this control scheme, a photovoltaic module (Figure 6.15) is installed adjacent to the solar thermal collector and generates direct current (DC) electricity to power a DC pump motor. Because the PV module generates electricity only when the sun shines, the pump circulates water to the collector only when sufficient solar energy is available.

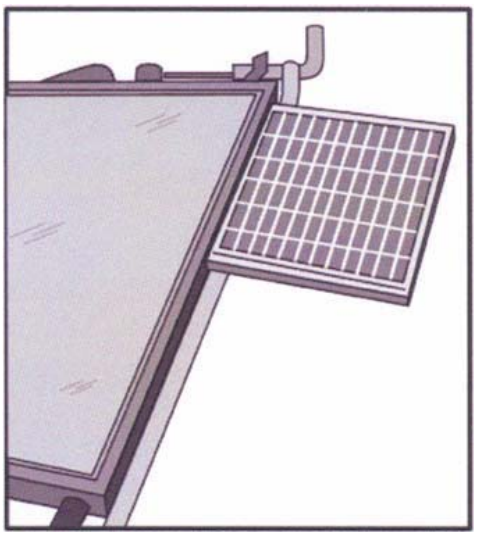

Figure 6.15 – Photovoltaic module

To maximize solar collection, some systems also incorporate a pump activator (linear booster) that electronically assists pump start-up.

© UNBS 2009 – All rights reserved

The use of a photovoltaic controller offers increased heat collection efficiency, as the pump speed is proportional to the amount of power generated by the PV module. When more heat energy is available in the thermal collector due to increased solar radiation, the module also receives more solar radiation, which increases the pump speed sending more heat collecting fluid through the collector.

6.6.4 Timer controller

A timer controller (Figure 6.16) turns the pump on only during the brightest portion of the day (from approximately 9 a.m. to 4:30 p.m.). To keep the system from losing energy in cloudy weather, the collector feed and return lines are connected through a special valve installed in the tank's common drain port, special care must be taken to ensure the valve's feed and return ports do not accumulate a large amount of sediment and scale build-up which could eventually affect system performance. Routine maintenance of the feed and return valve should be observed.

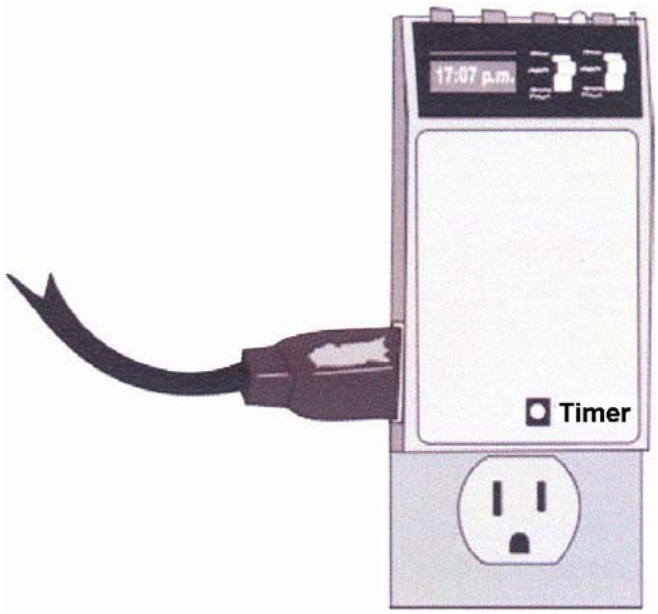

Figure 6.16 – Timer

6.7 Heat exchangers

Indirect systems have heat exchangers that transfer the energy collected in the heat-transfer fluid from the solar collector to the potable water. Heat exchangers can be either internal or external to the storage tank. Common heat exchanger designs are the tube-in-tube, shell-in-tube, coil-in-tank, wraparound-tube, wraparound-plate and side-arm designs. A technical discussion of the design and performance of these heat exchangers follows.

6.7.1 Tube in tube

This type of heat exchanger, as its name implies, consists of a tube within in a tube (Figure 6.17). Heat transfer occurs when one fluid moves through the inner tube while a second fluid moves in a different direction through the space between the inner and outer tubes. These heat exchangers are most commonly used in smaller systems. For example, in an indirect system using a tube heat exchanger, the collector heat-transfer solution would be in the inner tube, while the potable water would be in the space between the inner tube and the outer tube. The heat gained at the collector by the heat-transfer fluid would be transferred to the potable water passing over the inner tube.

 © UNBS 2009 – All rights reserved

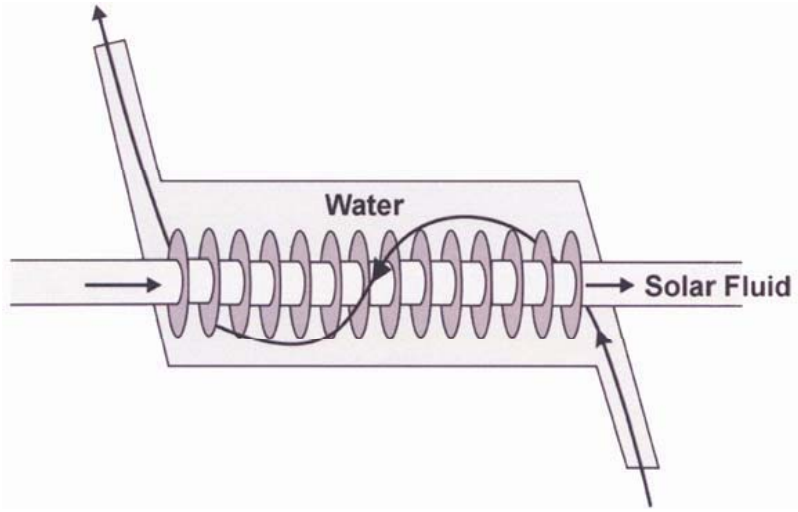

Figure 6.17 – Tube-in-tube heat exchanger

6.7.2 Shell in tube (becomes 6.7.1)

Similar to the tube-in-tube is the shell-in-tube heat exchanger (Figure 6.18) in which potable water flows through multiple tubes while the collector loop heat-transfer fluid passes over the tubes through the shell. This type of heat exchanger is used in numerous other technologies and available in single – or double-wall configurations.

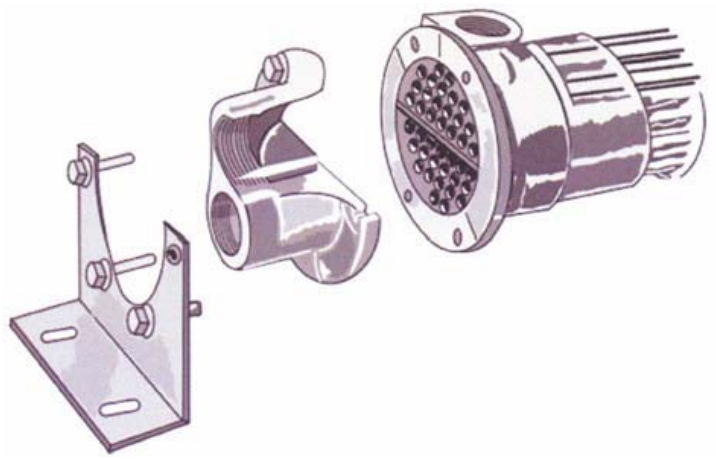

Figure 6.18 – Shell-in-tube heat exchanger

The coil-in-tank heat exchanger (Figure 6.19) is immersed in the lower section of the storage tank. The wraparound-tube (Figure 6.20) heat exchanger uses tubes welded to the outside of the water vessel. It is located on the lower half of the storage tank. The wraparound-plate design (double jacket) is similar to the wraparound-tube but it uses a separate plate welded around the lower half of the storage tank.

© UNBS 2009 – All rights reserved

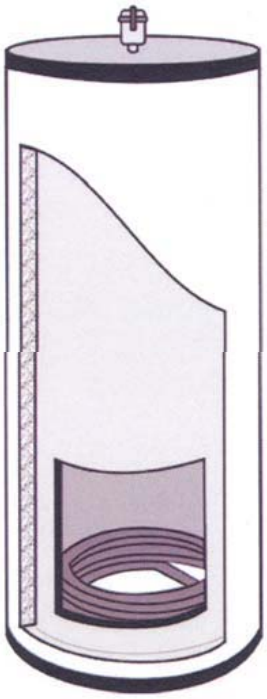

Figure 6.19 – Coil-in-tank type heat exchanger

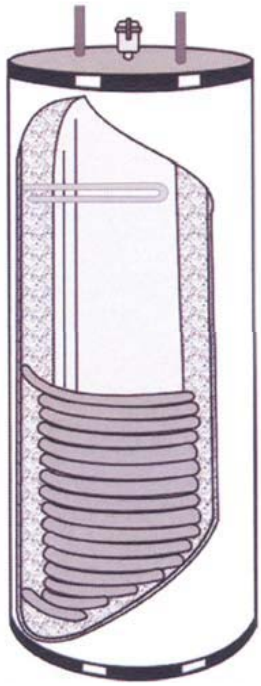

Figure 6.20 – Wraparound type heat exchanger

A side-arm heat exchanger is a tube-in-shell design that can be installed on the side of the storage tank to allow thermosiphoning of the water from the storage tank through the heat exchanger. The heat transfer fluid in the solar loop side of the heat exchanger heats the water in the shell side of the heat exchanger and heat exchange initiates the thermosiphon action between the water storage (potable) and the heat exchanger.

© UNBS 2009 – All rights reserved

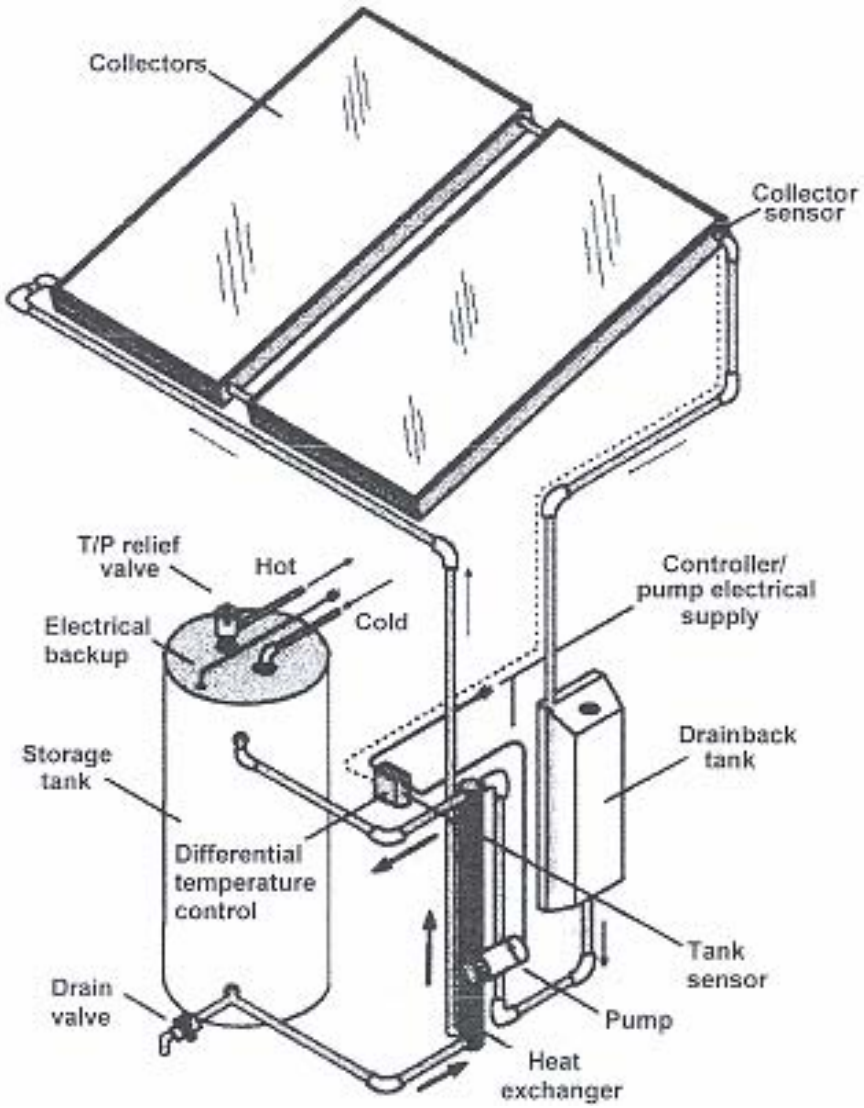

Figure 6.21 – Side-arm heat exchanger

6.7.3 Single and double-wall heat exchangers

Heat exchangers may have one or two walls (Figure 6.22). Double-wall heat exchangers have two walls that separate the heat-transfer fluid from the potable water. Double-wall heat exchangers often incorporate small passageways between the two walls to provide leak detection. An area between the two walls allows leaking fluid to pass outside, thereby revealing any leaks. In the event a leak occurs, system owners or service personnel can visually see the fluid flowing out from these passageways.

Whether a single-or double-walled exchanger is used depends on the heat-transfer fluid used in the system. Nontoxic fluids such as propylene glycol can be used with a single-walled heat exchanger. But ethylene glycol, a toxic fluid, should be used only with a double-walled heat exchanger.

© UNBS 2009 – All rights reserved

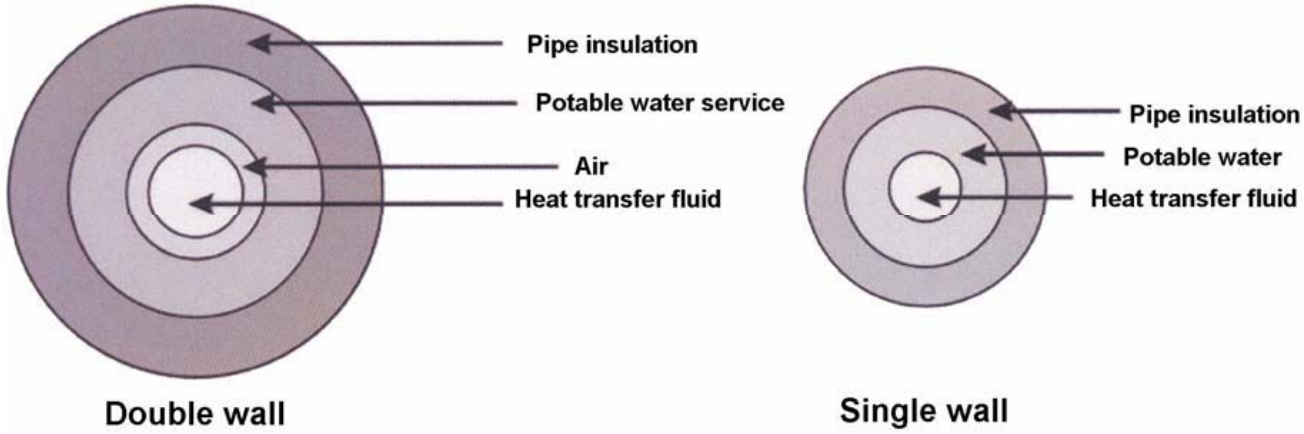

Figure 6.22 – Single – and double-wall heat exchangers Heat exchanger materials

Heat exchanger materials must be compatible with the system's fluid and piping. These materials can be steel, aluminium, bronze, stainless steel or cast iron, but copper is by far the most common. Copper prevents corrosion and also acts as a good thermal conductor. Alloys of copper and nickel may also be used for aggressive or hard water areas.

6.7.4 Plate Heat exchanger

A plate heat exchanger is a type of heat exchanger that uses pressed corrugated metal plates to transfer heat between two fluids. These metal plates are fitted between a thick, carbon steel frame. Each plate flow channel is sealed with a gasket, a weld, or an alternating combination of the two. Plate heat exchangers have overall heat transfer coefficients that are 3-4 times those found in shell and tube heat exchangers.

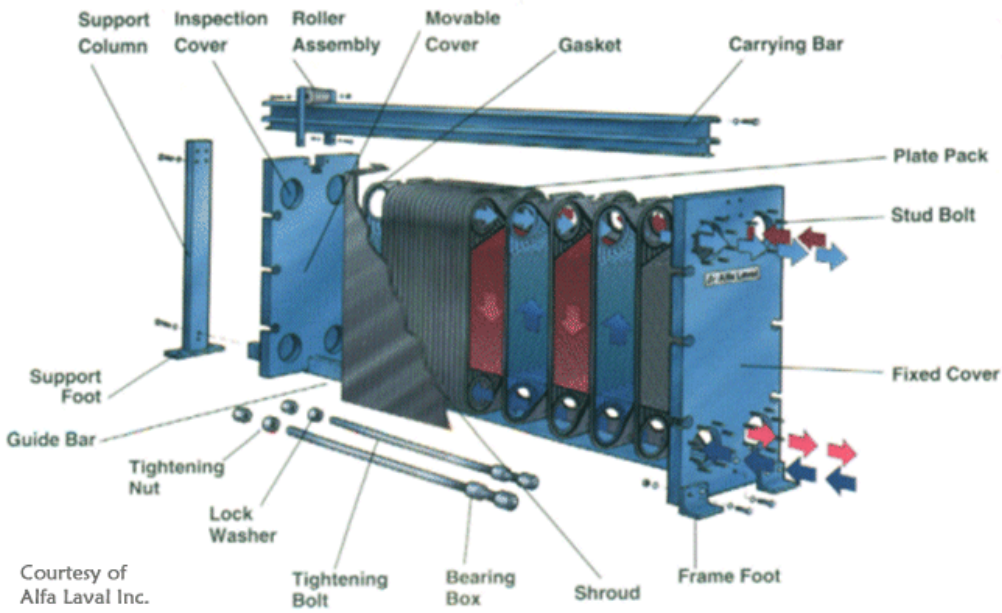

6.7.5 Heat exchanger efficiency

Systems with heat exchangers can experience a 10 – 20 % loss in total efficiency in the transfer of heat from the collection loop to the stored water. However, economic savings and fail-safe freeze protection may offset that efficiency loss.

For example, heat exchange systems can use corrosion-inhibiting heat-transfer fluids that allow the use of less-expensive aluminium or steel in collectors, exchangers and piping. If aluminium is used anywhere in the system, no red metal (copper, brass or similar alloys) should be used unless the heat transfer fluid is non-ionic

 © UNBS 2009 – All rights reserved

or an ion trap is placed upstream of each aluminium component to reduce galvanic corrosion. Ion traps require periodic servicing.

6.7.6 Heat exchanger sizing

Heat exchangers are sized based on their heat-transfer capabilities, flow rates and the temperatures of incoming and outgoing fluids. For packaged and approved or certified systems, the manufacturers have sized the heat exchanger and matched its performance to the collector array and flow rates of the system. Under sizing the heat exchanger is a common mistake of home-built systems.

6.8 Heat-transfer fluids

All solar systems use some types of heat-transfer fluid. Potable water is the heat-transfer fluid in active direct systems and is the most common. Indirect systems in cold climates use a non-potable solution that will freeze only at extremely low temperatures. The most common of these fluids are:

- Propylene glycol
- Ethylene glycol
- Hydrocarbon oils
- Synthetic oils such as silicone

Glycols are the most commonly used heat-transfer solutions for indirect systems. Special inhibitors are added to the glycol during the manufacturing process to prevent the fluid from becoming corrosive. Thus glycol fluids must be checked periodically (follow manufacturers instructions) to ensure they remain chemically stable. PH tests of the glycol can be conducted using either pH test strips or standard pH testing color charts.

When using glycol, materials, such as gaskets and seals used in the various system parts (pumps, valves, expansion tank, etc), must be compatible. Glycol compatible materials include Teflon, Viton and EPDM. The use of certified systems will assure that all system components and materials are compatible.

In some cases, the glycol is mixed or diluted with distilled or demineralised water during the system charging process. As always, follow the manufacturer's recommendations. Some heat transfer fluids should not be diluted since dilution can change the level of freeze protection.

Synthetic and silicon oils have unique characteristics. Both have long lifetimes and require little maintenance. Their toxicity is also low. Nevertheless, the lower thermal conductivity and viscosity of these oils increase pump and heat exchanger requirements. As in the case of glycol, one must pay special attention to component material selection and their compatibility with the specific oils. The surface tension of oils is very low so sometimes leaks can be a recurring problem. Special care must be taken to avoid mixing any water with oils.

6.9 Expansion tank

Most indirect systems that use a heat transfer fluid other than water also incorporate an expansion tank (Figure 6.23). As the heat-transfer fluid temperature rises, it expands. The expansion tank provides room for this change in volume. Inside the expansion tank, a flexible bladder maintains a constant pressure on the fluid while allowing it to expand and contract as it heats and cools. The expansion tank prevents damage from over-pressurization and eliminates the potential creation of a vacuum inside the collector loop.

Expansion tanks are normally pre-charged by the manufacturer to a set pressure level. The system pressure-relief devices provide overpressure protection. The size of the expansion tank depends on the volume of fluid in the system and the rate of fluid expansion at higher temperatures. The higher the temperature the more the fluid expands. The size of the expansion tank must allow for the total potential expansion of the fluid or elevated pressures will be experienced causing the pressure relief valve to open and result in complete pressure loss in the solar loop. Some solar water heating systems have an expansion tank on the cold water supply line when a check valve or back-flow prevention device is on the cold-water line.

© UNBS 2009 – All rights reserved

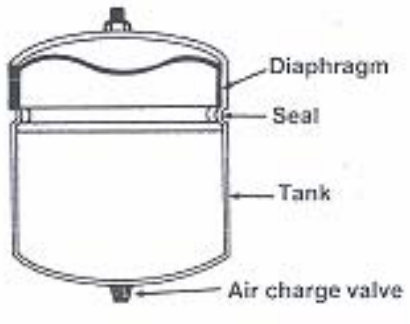

Figure 6.23 – Expansion tank

6.10 Valves, gauges and meters used in solar water heating systems

As indicated in Figure 6.24, a variety of valves, gauges and meters can be incorporated as part of a solar heating system's design. These components serve to:

- Expel and vent air from the system (air vents)
- Safety limit excessive temperatures and pressures (pressure relief and temperature-pressure relief valves)
- Prevent vacuum locks during drainage (vacuum breakers)
- Isolate parts of the system (isolation valves)
- Prevent thermosiphon heat losses and maintain flow direction (check valves-mechanical and motorized)
- Provide freeze protection (freeze-prevention valve)
- Monitor the system (pressure gauges, temperature gauges and flow meters).

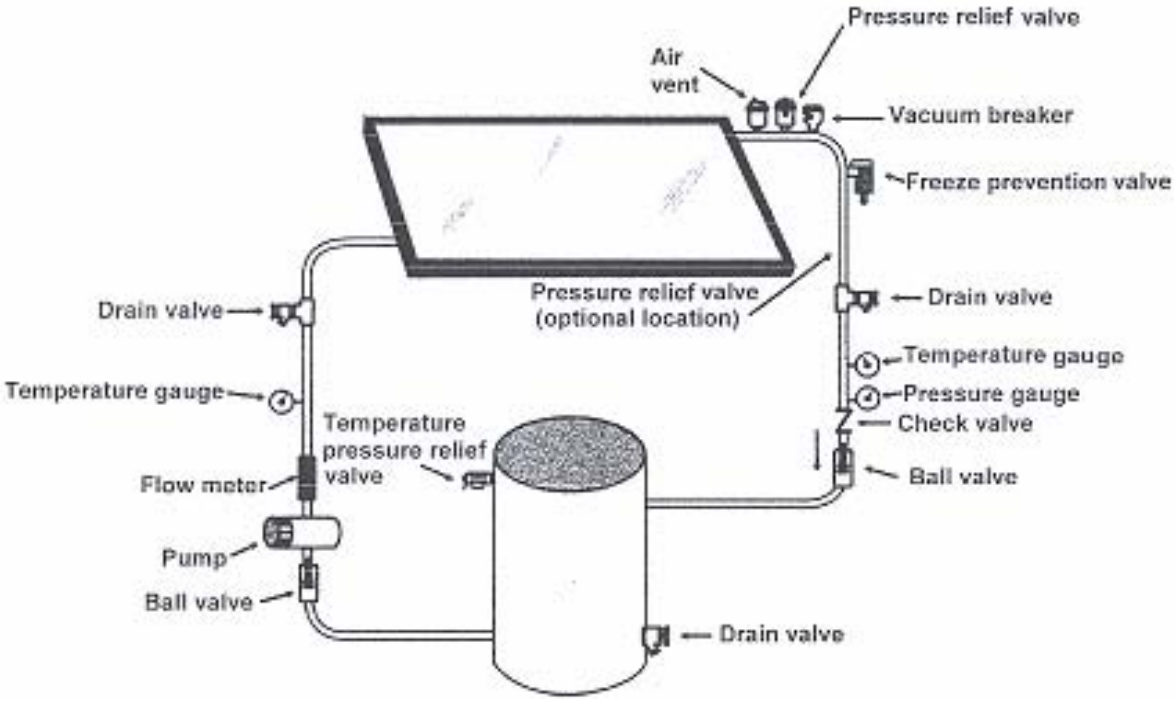

Figure 6.24 – Solar water heating system valves and monitoring equipment

© UNBS 2009 – All rights reserved

6.11 Air vent

This valve (Figure 6.25) allows air that has entered the system to escape, and in turn prevents air locks that would restrict flow of the heat-transfer fluid. An air vent must be positioned vertically and is usually installed at the uppermost part of the system. In active direct systems supplied by pressurized water, an air vent should be installed anywhere air could be trapped in pipes or collectors. Indirect systems that use glycol as the heat-transfer fluid use air vents to remove any dissolved air left in the system after it has been pressurized or charged with the heat-transfer fluid. (Once the air has been purged in these indirect systems, the air vent mechanism is manually closed.)

A popular option to using a separate air vent and vacuum breaker, when both are required, is a combination air vent and vacuum breaker valve.

Manual air vents should be used in indirect systems to avoid any loss of heat-transfer fluid, which would affect the system's pressurized. Using a manual air vent that the installer opens during charging to relieve trapped air in the loop will not only vent trapped air, but once the air has been expelled and the installer then closes the vent, it will in turn prevent any additional venting from the system. If an automatic, instead of manual air vent is used, the dissolved air bubbles that had accumulated during the charging process will eventually vent through the automatic air vent causing the system loop to lose pressure. Some automatic air vents have a dust cap that can be closed to prevent additional venting or loss of pressure.

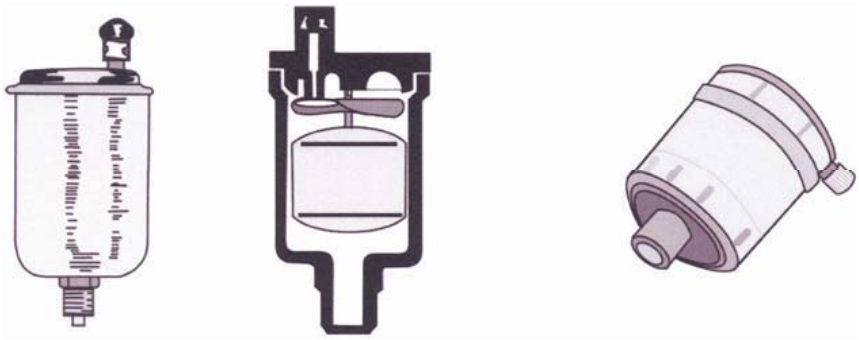

Figure 6.25 – Air vent

6.12 Temperature – pressure relief valve

A temperature-pressure relief valve is also called a pressure-temperature relief valve or P&T valve or T&P valve. These names are used interchangeably in the industry. This valve (Figure 6.26) protects system components from excessive pressures and temperatures. A pressure-temperature relief valve is always plumbed to the solar storage (as well as auxiliary) tank. In thermosiphon and ICS systems, where the solar tanks are located on a roof, these tanks may also be equipped with a temperature-pressure relief valve since they are in some jurisdictions considered storage vessels. These valves are usually set by the manufacturer at 1034 kPa and 100 ^{o}C. Since temperature pressure relief valves open at temperatures below typical collector loop operating conditions, they are not commonly installed in collector loops. (See pressure relief valves below). Temperature-pressure relief valves located inside a building must drain to the outside. If uncertain, follow local code requirements.

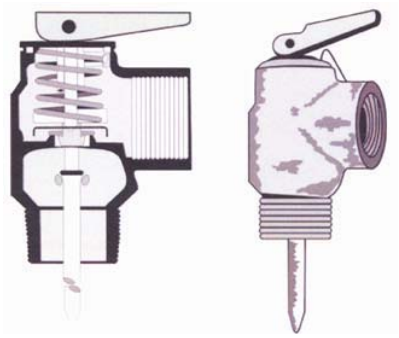

Figure 6.26 – Pressure-temperature relief valve

© UNBS 2009 – All rights reserved

6.13 Pressure relief valve

A pressure relief valve (Figure 6.27) protects components from excessive pressures that may build up in system plumbing. In any system where the collector loop can be isolated from the storage tank, a pressure relief valve must be installed on the collector loop. The pressure rating of the valve (typically 862 kPa) must be lower that the pressure rating of all other system components, which it is installed to protect.

The pressure relief valve is usually installed at the collector. Because it opens only with high pressure, it operates less frequently than does a temperature-pressure relief valve. For this reason, it offers a higher degree of reliability and is the valve of choice for protecting the solar collector. Indirect systems typically use pressure-relief valves with lower pressure settings. Pressure relief valves located inside a building should be piped to discharge to a safe location.

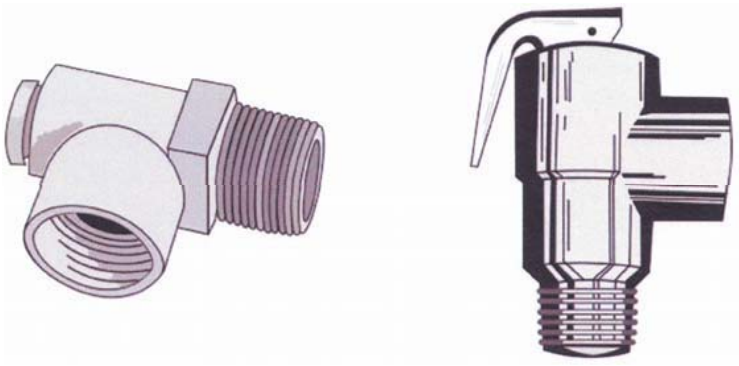

Figure 6.27 – Pressure relief valve

6.14 Pressure gauge

A pressure gauge (Figure 6.28) is used in indirect systems to monitor pressure within the fluid loop. In both direct and indirect systems, such gauges can readily indicate if a leak has occurred in the system plumbing.

Figure 6.28 – Pressure gauge

6.15 Vacuum breaker

A vacuum breaker (Figure 6.29) admits atmospheric pressure into system piping, which allows the system to drain. This valve is usually located at the collector outlet plumbing but also may be installed anywhere on the collector return line. The vacuum breaker ensures proper drainage of the collector loop pluming when it is either manually or automatically drained. A valve that incorporates both air vent and vacuum breaker capabilities is also available.

 © UNBS 2009 – All rights reserved

Figure 6.29 – Vacuum breaker

6.16 Isolation valves

These valves are used to manually isolate various subsystems. Their primary use is to isolate the collectors or other components before servicing. Two common types of isolation valves are ball valves (Figure 6.30) and gate valves (Figure 6.31)

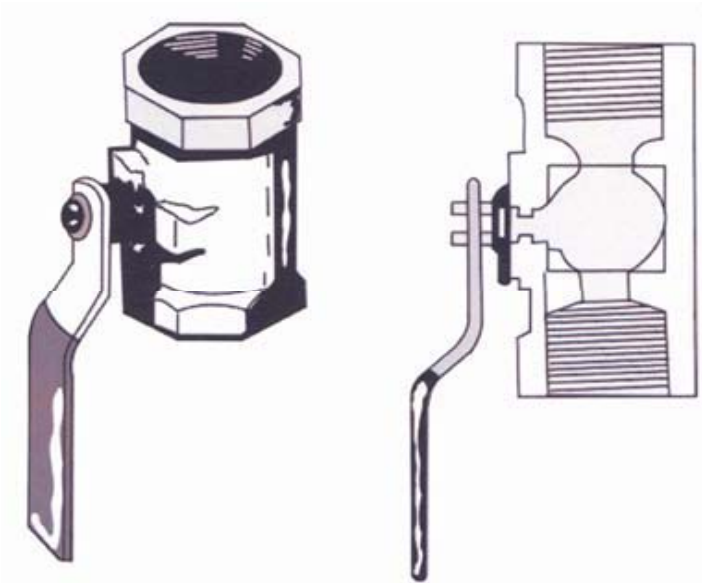

Figure 6.30 – Ball valve

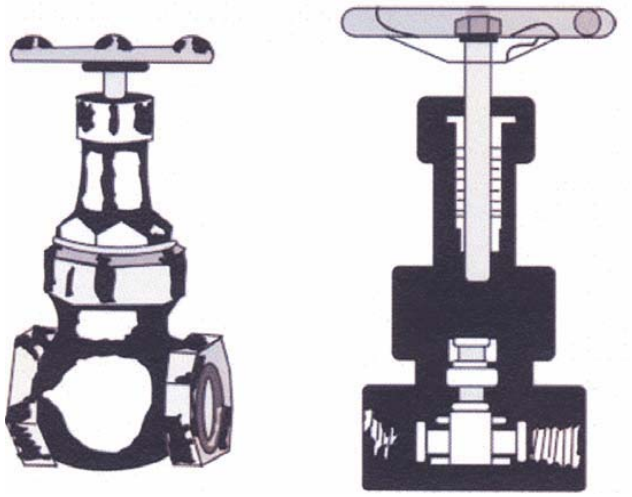

Figure 6.31 – Gate valve

© UNBS 2009 – All rights reserved

Ball valves provide a complete flow barrier and are less likely than gate valves to leak, corrode or stick. Ball valves may also be used as flow balancing valves in multiple collector arrays. Three-way ball valves may be used for both isolation and draining at the collector loop. An isolation valve is also required in the cold-water service line in the event water flow to the storage tank and system must be stopped.

6.17 Drain valves

These valves (Figure 6.32) are used to drain the collector loop, the storage tank and, in some systems, the heat exchanger or drain-back reservoir. In indirect systems, they are also used as fill valves. The most common drain valve is the standard boiler drain or hose bib.

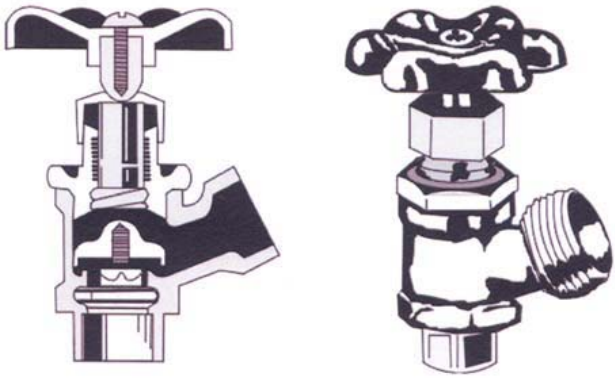

Figure 6.32 – Drain valve

6.18 Check valves

Check valves allow fluid to flow in only one direction. In solar systems, these valves prevent thermosiphorning action in the system plumbing. Without a check valve, water that cools in the elevated (roof-mounted) collector at night will fall by gravity to the storage tank, displacing lighter, warmer water out of the storage tank and up to the collector. Once begun, this thermosiphoning action can continue all night, continuously cooling all the water in the tank. In many cases, it may lead to the activation of the backup-heating element, thereby causing the system to lose even more energy.

The various types of check valves include motorized, vertical and horizontal swing. A motorized check valve (Figure 6.33) is wired to the pump. When the pump is on, the valve opens; when the pump is off, the valve closes and forms a positive seal.

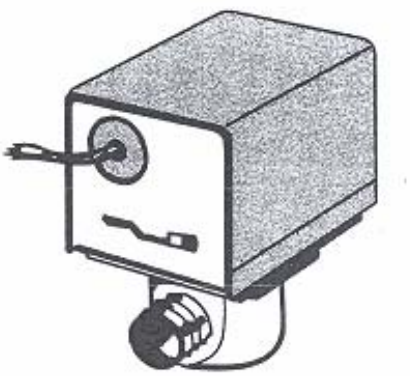

Figure 6.33 – Motorized check valve

Vertical check valves (Figure 6.34) must open easily with activation of low-flow, low-head PV-powered pumps used in some solar systems. The seat of these valves should resist scale and high temperatures.

 © UNBS 2009 – All rights reserved

Horizontal swing check valves (Figure 6.35) must be installed horizontally because gravity and the flapper's weight close the valve.

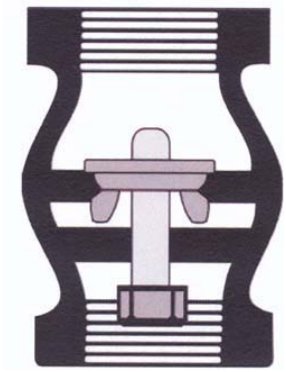

Figure 6.34 – Vertical check valve

Corrosion and scale may build up on the internal components of any (motorized, vertical or horizontal) check valve; therefore, a regular service schedule should be maintained. The chemical makeup of the local water supply is a major determinant in how scale build-up affects system components.

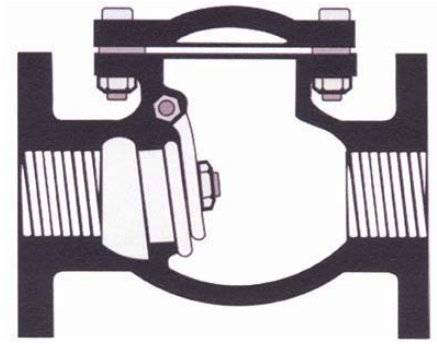

Figure 6.35 – Horizontal swing check valve

6.19 Mixing or tempering valve

This valve will mix cold water with the hottest water from the storage tank, delivery water at a preset temperature. Such a valve increases the total amount of hot water available. The intended use of this valve is to conserve hot water – not as a safety device (Figure 6.36).

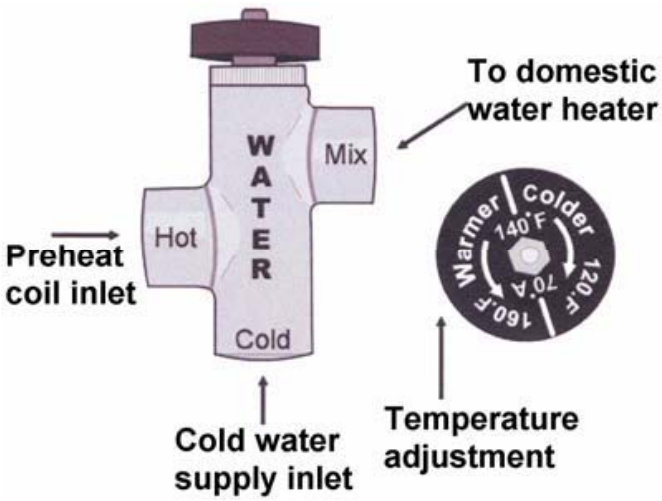

Figure 6.36 – Tempering valve

© UNBS 2009 – All rights reserved

6.20 Anti-scald valve

An anti-scald valve (Figure 6.37) also mixes cooler water with hot water to deliver water at a preset temperature. However, unlike a mixing valve, an anti-scald valve also functions as a safety device, closing off the flow into the house if the hot or cold mixing supply fails.

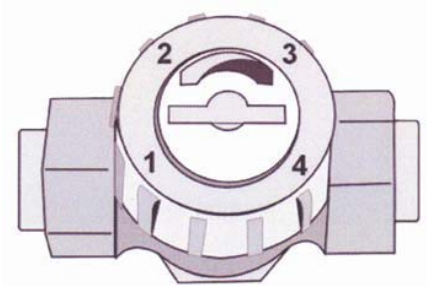

Figure 6.37 - Anti-scald valve

6.21 Freeze-protection valves

Freeze-protection valves (Figure 6.38), are set to open at near freezing temperatures, and are installed on the collector return line in a location close to where the line penetrates the roof. Warm water bleeds through the collector and out this valve to protect the collector and pipes from freezing. A spring-loaded thermostat or a bimetallic switch may control the valve. Figure 6.39 shows where a freeze-protection valve is typically located on a solar system.

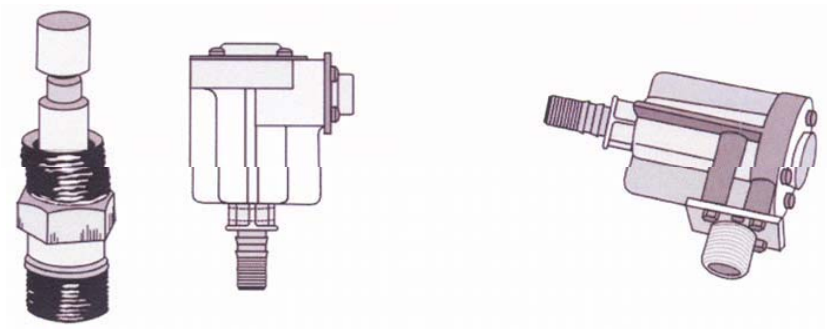

Figure 6.38 – Freeze-protection valves

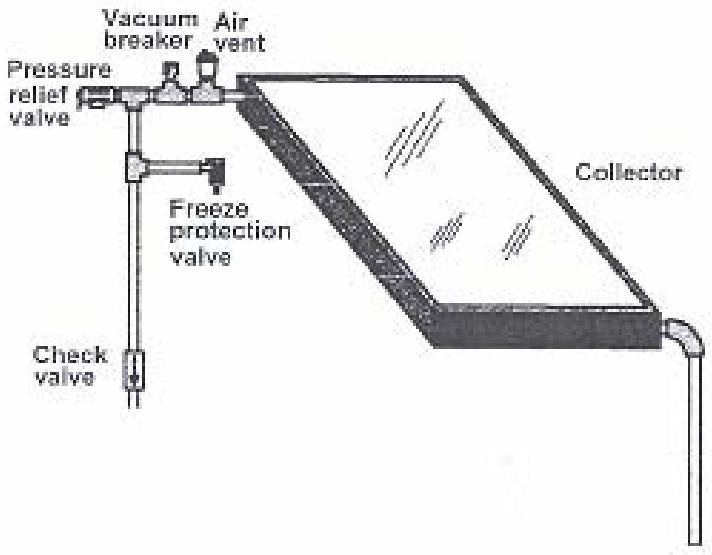

Figure 6.39 – Location for freeze-protection valves

© UNBS 2009 – All rights reserved

A check valve must be used in all systems with freeze-protection valves. This check valve prevents tank water from going straight from the tank to the freeze valve, thus bypassing flow through the collector.

If these valves are installed on well water or cistern systems, low-pressure valves should also be installed, which enable freeze protection to function when power outages create pressures.

6.22 Other components

The following components are not as crucial to system operation as the previously listed valves, but they do provide the homeowner and service technician with important information.

6.22.1 Temperature gauges

These gauges (Figure 6.40) provide an indication of system fluid temperatures. A temperature gauge at the top of the storage tank indicates the temperature of the hottest water available for use. Temperature wells installed at several points in the system will allow the use of a single gauge in evaluating system operation.

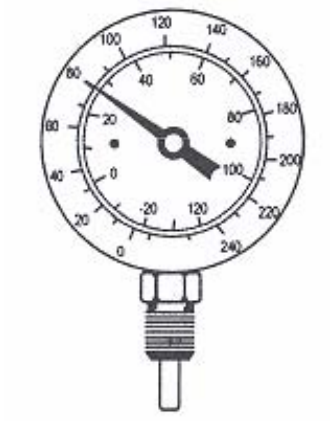

Figure 6.40 – Temperature gauge

6.22.2 Flow meters

Flow meters (Figure 6.41) enable the owner and service person to determine if the pump is operating and, if so, at what flow rate. The flow meter is usually located in the collector feed line above the pump to protect the meter from extreme temperatures.

Figure 6.41 – Flow meter

© UNBS 2009 – All rights reserved

6.23 Water supply

While not necessarily a component of a solar water heating system, the method for cold water supply to the system can influence both system selection and operation. Most solar water heating systems must operate under pressure. Pressure is supplied though the service water entering from the municipality, a pressure pump on the water system of the building (well, cistern), or pressurized by an elevated cold-water supply tank mounted above the solar heating system.

NOTE: The water supply tank should be mounted at least two meters from solar heating system.

7 Design considerations

7.1 General

The main requirements of a solar heating system are that it should absorb solar energy efficiently and transmit the heat so generated with a minimum of loss to a storage unit ready for use. In addition, it should be sufficiently durable to have a useful life comparable with that of other building services equipment, and require a minimum of maintenance. This clause mainly covers those features of component and system design that promote durability and reliability. Design factors that affect the thermal performance of a system are discussed in Clause 8. System design considerations are similar to those concerning other parts of hot water systems in respect of compatibility of materials, freedom from leakage and air locks, and other matters on which good practice is already well established. Additional considerations that apply to solar heating systems are mainly a consequence of the exposure of parts of them to the outdoor environment and the extremes of temperature that result from this. Freezing and boiling in collectors are hazards to which reference has already been made. A further consequence is the high temperature that may be reached by an absorber at times when there is no fluid flow through it. This may occur on drainback during normal operation, on shut-down for maintenance, or even during installation. Under these conditions the plate temperature may approach 150 °C if it has a neutral black absorbing finish or 200 °C if the finish is highly selective, and these values are recommended for design purposes. The corresponding temperature for the front cover may approach 100 °C, and when more than one cover is fitted, the inner ones may reach temperatures greater than this.

Having an exposed surface, the collector of a solar heating system is subject to wind loading. The fixtures that support the collector shall withstand these loads, together with the weight of the collector. They shall also transfer the loads safely to the roof members or other foundations without impairing the weather tightness or strength of the structure. (See Annex B.)

7.2 Collector design considerations

7.2.1 Materials

Properties of importance in the selection of materials for collectors are thermal properties and durability. Of the thermal properties, the thermal conductivity determines such design features as the absorber plate thickness and fluid passage spacing, whilst the heat capacity affects the rate of response to intermittent sunshine (see also Clause 8). Durability requirements will need to take account of the effects of the outdoor environment (solar radiation, wind loading, hail impact, etc.), thermal effects (expansion and contraction, frost, etc.), corrosion and stressing (in situ and handling during installation, etc.). Capillary fittings employing low temperature soft solders are not suitable for use when directly attached to, or in contact with, collectors. Manufacturers should be consulted on suitable high temperature solders for this duty. Absorber plates shall be leak and pressure tested as described in Annex E. Each absorber plate or collector shall be marked with the maximum working pressure (see E.2.1).

Methods of type testing for assessing the resistance of collectors to adverse conditions are described in Annex F. NOTE: Materials used should be environmentally friendly.

7.2.2 Heat transfer and flow rates

 © UNBS 2009 – All rights reserved

The collection efficiency of a solar collector decreases with increasing temperature and therefore systems are generally designed to give good heat transfer to the fluid and rapid thermal response.

To ensure adequate efficiency of heat removal, flow rates in the region of 0.01 to 0.02 kg/s per square metre of collector area are found to be satisfactory, when the fluid is water or water based. For other fluids, the flow rate is likely to be higher, and the manufacturer of the fluid should be consulted. (See also Clause 8.)

7.2.3 Insulation

The reverse side of an absorber plate often has a bright surface of low emittance, but it is desirable to provide additional insulation to reduce heat loss. Since solar absorber plates can, under shut-down conditions, reach temperatures approaching 200 °C, care should be taken to select insulating materials that will tolerate these temperatures without degradation. Some insulating materials give off vapours at elevated temperatures which can condense on the underside of the cover and reduce transmission of solar radiation. As a design rule-of-thumb, the total thermal conductance between the back of the absorber plate and the rear of the collector should not be more than 1.5 W/(m^2.K); appreciably lower values could be justified for collectors having selective absorber coatings or more than one cover. Where collectors are built into roof spaces, it may be necessary to provide sufficient back and side insulation to protect the other roofing material (such as wooden roof trusses, boarding and felts) and, in addition, to ensure that the insulation properties of the roof continue to comply with the requirements of building regulations.

7.2.4 Absorber coatings

Paints are often used to provide the surface finish on absorber plates. Some form of pre-treatment of the plate surface is usually necessary to ensure satisfactory paint adhesion during the repeated thermal cycling that occurs in service. The paint manufacturer's advice shall be sought so that the pre-treatment and finish are compatible with the expected service conditions.

7.2.5 Collector box

An externally-mounted collector shall be weather tight and sufficiently strong and stiff to withstand the forces applied to it in service and during installation without mechanical failure, breakage of glass or damage to weather seals.

Methods of calculating the forces applied to the collector box by wind and snow loads are given in Annex B. Arrangements for supporting the covers shall include adequate provision for thermal expansion, and particular care shall be taken to ensure that covers will not be caused to fail from thermal stress due to cooling at the points of support.

The collector box shall be so designed as to prevent the retention of excessive quantities of internal condensation, which can impair the effectiveness of insulation and lead to corrosion or degradation of the absorbing surface. Unless special provision has been made to ensure that the collector will remain hermetically sealed throughout its working life, the internal spaces shall be vented to the atmosphere by holes situated at the lowest portion of the box, so as to allow drainage of any condensed moisture. In addition to the drainage holes at the bottom, other holes may be required to provide ventilation of the insulation and of the space below the cover. Holes should be so placed or shielded as to preclude the ingress of wind-driven rain or snow.

7.2.6 Covers for solar collectors

The following physical and chemical properties are desirable in materials used for the construction of covers for solar collectors:

a) high transmission of visible and near infra-red radiation of wavelength up to 2.4 µm in order to maximize the input of solar radiation;

b) low transmission of infra-red radiation of wavelength exceeding 3 µm in order to minimize heat losses;

c) good resistance to degradation by sunlight

© UNBS 2009 – All rights reserved

d) good resistance to chemical degradation and environmental stress cracking when subjected to contact with rainwater, atmospheric pollutants, detergents used for cleaning, or any other materials with which the cover may reasonably be expected to come into contact (e.g. sealant, paint splashes);

e) tolerance to high and low temperatures without significant embrittlement or softening;

f) hard surface (to facilitate cleaning without surface damage);

g) high impact resistance (to resist accidental or malicious damage);

h) appropriate fire resistance;

i) sufficient strength to withstand wind and hailstorms as indicated in Annex B.

Glass or appropriate plastics materials may be used as cover materials. Many variants of basic plastics have been formulated to satisfy special requirements.

The manufacturers/suppliers should always be consulted to ensure that materials used for covers are of a suitable type and grade in relation to factors (a) to (i) in this clause.

7.3 System design considerations

7.3.1 Plumbing and flow rates

Some of the components used in a solar preheating system may be selected from existing products developed for other heating applications, but care should be exercised. Help should be sought from manufacturers to ensure that the components will be suitable for the temperatures, pressures and other conditions found in solar heating systems. Particular attention is drawn to the high temperatures that may be experienced by cisterns and float valves connected to the collector circuit.

The system plumbing should be designed to ensure that there is an approximately equal fluid flow through each collector in an array, and that adequate air bleeding facilities are provided.

Flow velocities shall be less than 1 m/s and in any event they shall not exceed 2 m/s, since excessive flow velocity can give rise to noise and erosion (Note: m/s – meters per second).

7.3.2 Pressure relief and venting

Vent pipes, pressure relief valves and automatic air bleeding devices on the collector circuit shall be so arranged that vapour or heat transfer fluid escaping from the system can be safely discharged.

A free fluid path from the collectors to a safety valve or expansion vessel shall be provided. This path shall not contain a non-return valve, and if it is necessary that it should contain a shut-off device, this shall be protected from accidental closure (e.g. by means of a wire and seal).

Sealed systems shall be fitted with a pressure relief valve and a pressure gauge.

7.3.3 Components and fittings

All materials, fittings and components used shall comply with the requirements of the relevant Uganda Standards listed in Clause 2 and those given in the Bibliography. Among the standards relating to the potable water side of the system are those listed in Table 7.1, though the list is not exhaustive.

In direct systems, where the heat transfer fluid is mains water, the metals and connectors used in the solar collector circuit shall be wholly suitable for potable water applications and no other less suitable materials shall be used.

7.3.4 Collector mounting

 © UNBS 2009 – All rights reserved

Collectors are mounted in various ways, the most common arrangement being mounting above, and parallel to, a slated or tiled roof, with clearance between the bottom of the collector and roof cladding to allow rain to run off normally and to avoid accumulation of leaves and other debris at the upper edge. Mounting in direct contact with tiles and slates may be convenient, but this provides less clearance for the runoff of rain and debris and can impose loads on the cladding which it has not been designed to accept. Sometimes, the cladding is removed or omitted and collectors are mounted with the exposed surface more-or-less flush with the roof. Collectors are also sometimes built into the roof behind patent glazing.

7.3.5 Patent glazing

Where collectors are integrated into roof structures under patent glazing, reference should be made to ISO 16932. Particular regard should be paid to minimization of thermal stress in the glass, which will be subject to a wider range of operating temperature than in normal use. Consultation on this point with the manufacturers is advised. (See also 7.2.6(e).)

7.3.6 Weather resistance

Where the system is attached to, or forms an integral part of, a wall or roof, the positioning and method of attachment to the building shall be such as not to impair the weather tightness and resistance of the building to moisture penetration into any part that would be adversely affected by such moisture. (See Annex A.)

7.3.7 Structural safety

The method of fixing and the fixtures used to attach the system to the building shall be adequate for their purpose during the life of the building. The forces that the wind exerts on a collector depend on how it is installed on the roof. Procedures are outlined in Annex B for determining the highest loads likely to be experienced by collectors installed in various ways. It should be recognized that the collector fixtures can be subjected to a component of force tending to lift the collector from the roof. However, it will usually be the components acting parallel to the roof that determine the strength and type of fixtures required. Fixtures shall need no maintenance during the service life of the collector. In addition to the primary loads referred to in this clause, they shall be designed to withstand other effects such as bending due to variation in wind forces and differential thermal movement, abrasion against roof tiles and other nearby materials, and corrosion due to rain and accumulated debris.

The addition of the system to a building shall in no way impair the ability of the building structure to withstand the combined dead load, wind load and imposed loads expected during the building life. (See Annexes A and B.)

Table 7.1 – Some relevant standards for components and fittings

Feed and expansion cisterns and expansion vessels BS 417, BS 4213, BS 4814		
Tanks and cylinders BS 1566-1, BS 1565, BS 3198		
Pumps	ISO 9906	
Valves	BS EN 12288	
Pipework and fittings		
British Standards applicable to pipes and pipe fittings include the following		
Form and material	**BS designation**	**Type and application**
Tubes Copper	BS EN 1057	Hot and cold water services
Plastics ABS	ISO 15493	Cold water services

© UNBS 2009 – All rights reserved

PP Unplasticized PVC HDPE Stainless steel	ISO 15874 ISO 4422 ISO 4427 ISO 7598	Hot and cold water services Cold water services Cold water services Hot and cold water services
Fittings Copper and copper alloy Malleable cast iron and cast copper alloy Unplasticized PVC ABS	 BS 864-2 ISO 49 and ISO 4144 ISO 16422 ISO 727-1	 (capillary and compression) Hot and cold water services (compression) Cold water services (screwed pipe fittings) Hot and cold water services Cold water services Cold water services

7.3.8 Fire resistance

The addition of the system on to the walls or roof of a building should in no way impair the fire resistance of the element to which it is attached. Where the collector forms an integral part of an element of a building, the following minimum requirements apply.

a) When wall-mounted, the collector, together with any back-up walling, is required to have a fire resistance of a specified period.

b) When roof-mounted, the collector, in conjunction with any back-up roof construction, is required to comply with ISO 3008.

c) Where pipes pass through a separating wall or floor, protected structure or cavity barrier, they shall be adequately fire-stopped, without inhibiting movement due to thermal expansion.

7.3.9 Thermal insulation

Where the system forms an integral part of either the roof or external wall of a building, it shall be thermally insulated to a standard not less than that of the surrounding parts of the roof or wall in which it is situated. In addition, where the system is installed in a roof space above a heavily insulated ceiling, the pipe insulation should protect the system from frost conditions. Selection of thermal insulation for building applications and equipment shall be done in accordance with ISO 9774 and ISO 13787. (See also Annex C.) All tanks, cisterns, cylinders, pipes, etc. should be well insulated using insulation board, petal jackets, or other conventional or proprietary systems. (See ISO 8873.)

7.3.10 Bio-deterioration

The system should be constructed and installed in such a way as to inhibit the entry of small mammals, birds and large insects. Particular care will be required at collector vent holes and at holes where pipes or wires pass through the building fabric and the collector box. Materials which are likely to be adversely affected or attacked by organisms such as fungi, mosses, bacteria and insects should be used only if suitably treated in accordance with the relevant standards listed in Clause 2.

7.4 Corrosion protection

7.4.1 General

Corrosion in metals in a solar water heating system may occur both internally within the fluid passages of the collector and system pipe work and externally on the surfaces of the collector box and absorber plate. Two main forms of corrosion need to be guarded against in solar heating systems: bimetallic corrosion and pitting corrosion. External components should be of corrosion-resistant materials, and liability to bimetallic corrosion should be reduced wherever possible. (See ISO/TR 10217, ISO 4952, ISO 11303, ISO 11972.)

 © UNBS 2009 – All rights reserved

7.4.2 Bimetallic corrosion

Bimetallic corrosion normally occurs at the interface between two dissimilar metals when in contact with an electrolyte. Internal corrosion rates can be slowed substantially by using a non-electrolyte fluid or by using suitable inhibitors. Insulated couplings are sometimes used also to reduce external corrosion at joints between dissimilar metals. Their action will be adversely affected if there are external conducting paths between the dissimilar metals. The possibility of this occurring through earth bonding should not be overlooked (see 9.2).

7.4.3 Pitting corrosion

Pitting corrosion normally occurs where the fluid transports particles of one metal, either in suspension or solution, and deposits them on to another metal in the presence of an electrolyte. This type of corrosion can be reduced by using suitable corrosion inhibitors or by using a non-electrolyte fluid. Pitting corrosion may also be caused by the effects of microorganism growth, and this can be reduced by the use of suitable biocides.

7.5 Heat transfer fluids

7.5.1 General

Temperatures in solar heating systems using flat plate collectors can vary from about -15 °C to as high as 200 °C when the heat transfer fluid is not circulating. The possibility of such a range of temperatures should be taken into account in the design of solar heating systems and in the selection of the heat transfer fluid. Agreement of the Environment and Water supply authorities to the use of fluids other than potable water should be obtained.

7.5.2 Aqueous fluids

Water has good heat transfer characteristics and is often used as a base for heat transfer fluids in solar heating systems. Supply waters, however, vary greatly in corrosion properties, and it is sometimes necessary to use distilled or deionised water. It may be necessary to add inhibitors, formulated to protect all metals in the system from corrosion. These inhibitors deteriorate in use and need to be renewed from time to time. Some inhibitors may be liable to degradation due to boiling.

Anti-freeze additives are also used, but it should be noted that certain of these are toxic and/or corrosive and may not be acceptable to the water undertaker.

7.5.3 Non-aqueous fluids

Non-aqueous fluids, such as oils, can be used as the heat transfer fluid. The fluids shall be chosen to be compatible with the materials used in the collector circuit and should contain de-oxidants, dehydration agents and biocides as necessary. Compatibility with pump glands and seals shall be determined. Because of the wide range of specific requirements of non-aqueous fluids, particularly in respect of the use of appropriate expansion vessels, the operating temperature range and protection of potable water from contamination, it is recommended that the manufacturer's advice be sought when selecting these fluids.(standards on these fluids should be referenced)

7.6 Controllers and temperature sensors

7.6.1 Safety aspects

Controllers for solar water heating systems shall be capable of meeting the safety requirements specified in EAS 205.

7.6.2 Performance

The switching temperature differentials shall remain within the manufacturer's specification over both the full operating temperature range of the sensors and the range of ambient temperatures. Details of test methods for checking the performance of differential temperature control systems are given in Annex G.

© UNBS 2009 – All rights reserved

NOTE A controller may be called upon to perform at many as 100 000 operations and an ancillary valve 10 000 operations during the life of the system.

7.6.3 Electrical interference

Electrical noise picked up through the sensor leads, the mains leads or otherwise shall not alter the specified switching temperature differentials.

Control systems shall not generate an amount of electrical interference (see 9.5) which is sufficient to affect other electrical equipment.

7.6.4 Indicators

Control systems should preferably be fitted with indicator lights showing the status of each control function (see 6.6).

7.6.5 Marking and information

A controller shall comply with the marking requirements given in EAS 205.

7.6.6 Temperature sensors

Methods of attachment of temperature sensors shall ensure that the sensor is in good thermal contact with the component the temperature of which is to be sensed, and that the attachment will remain secure.

It is recommended that sensors should not be directly immersed in water unless specially designed for immersion.

Temperature sensors attached to water stores shall be able to withstand temperatures in the range of 5 °C to 100 °C.

Collector temperature sensors and their associated wiring shall be able to withstand the temperature recommended in 7.1, without long term deterioration or drift in calibration. Connections in sensor leads should preferably not be made outdoors. However, if outdoor connections are unavoidable, waterproof junction boxes shall be used. Where matched sensors are supplied, these need to be used together. If failure of one occurs, replacement of both may be necessary.

7.7 Other design factors

Design features that affect the overall thermal performance of the system are discussed in Clause 8, where recommendations are given on such matters as component sizing, collector orientation, tank insulation etc. It should be noted that the expected benefits of solar heating may not be fully realized if the arrangements for raising the water to the final draw-off temperature are inefficient. It is important that the conventional parts of the system should be in good order, the cylinder suitably insulated and thermostats and other controls properly adjusted.

8 Thermal performance of solar water heating systems

8.1 General

Thermal performance of collectors shall be determined in accordance with the methods of test given in ISO 9806 and DUS 854-2.

The factors affecting performance which shall be taken into account include the following:

- collector class;

 © UNBS 2009 – All rights reserved

- collector area;
- average daily hot water usage;
- the size of the preheat vessel;
- collector mounting and location;
- solar irradiation;
- air temperature;
- cold water feed temperature;
- hot water draw-off temperature.

Full details are given in Annex D. Clauses 8.2 to 8.9 indicate how the performance depends on the various factors. Figures 8.1 and 8.2 illustrate the performance of typical systems.(check for these figures)

8.2 Collector class

The characteristics of the collector are of primary importance in determining the thermal performance of the system.

ISO 9806 provides methods for obtaining the collector's performance characteristics. These are the zero-loss collector efficiency η_o (mainly a measure of the collector's optical properties) and the collector heat loss coefficient U (a measure of the collector's thermal properties). The ratio U/η_o is a useful parameter by which to classify collectors and the classes defined for this standard are shown in Table 8.1. The boundaries have been chosen to correspond approximately to the main divisions of collector technology, which however are shown for guidance only.

Table 8.1 – Solar collector classification

Collector class	Range of collector characteristics U/η_o (in W-m^{-2}-K^{-1})	Typical collector technology for the class
B	less than 3	advanced
C	3 to 6	vacuum insulated
D	6 to 9	single glazed with selective coating
E	9 to 13	single glazed with matt black coating
F	greater than 13	unglazed

(check for testing component equipment from project)

8.3 Effective collector area

No solar collector collects all the solar radiation incident upon it. Because of this, the collector area required to collect a certain amount of solar energy will be larger if the collector were perfectly efficient. For design purposes, it is useful to think in terms of the effective area of a collector, although it will obviously be necessary to obtain its real dimensions when planning an installation. The quantitative relationship between the effective area A' and the aperture area A of a collector is given by the equation:

$$A' = \eta_o \times A$$

The gross area of a collector will of course be greater than the aperture area because of the surrounding frame.

© UNBS 2009 – All rights reserved

8.4 Hot water usage

The solar energy supplied by a given system depends on the amount of hot water, used. In sizing a system, the occupancy for which the house is designed should be borne in mind as well as the number and ages of the actual occupants at the time of installation. The average daily consumption in three to five person households is about 30 L per person at 55 °C, rising to between 35 L and 40 L per person in one to two person households.(its most preferably to use a flexible shower than a fixed shower).

8.5 Preheat vessel size

Calculations show that, provided the volume of the preheat vessel exceeds about 80 % of the average daily hot water usage; its size does not significantly affect the annual solar energy supplied. However, if the preheat vessel is made smaller, then the annual solar energy supplied may be reduced considerably, especially if the hot water is used after sunset or before mid-morning. In Annex D a method is given to estimate the variation in annual solar energy supplied as a function of the size of the preheat vessel, for the case where most of the hot water is used in the evening. When the hot water is used predominantly during hours of sunlight, the annual solar energy supplied becomes much less sensitive to reducing preheat vessel size. Calculations also suggest that a small increase in the solar energy supplied can be realized if stratification (a variation in temperature from the top to the bottom of the vessel) occurs, and it is recommended that the preheat vessel be designed to encourage this.

8.6 Collector mounting and location

8.6.1 General

The way in which a collector is mounted will influence the results of thermal performance tests. Collectors to be tested shall therefore be mounted in accordance with 8.6.2 to 8.6.8. Full-size collector modules shall be tested, because the edge losses of small collectors may significantly reduce their overall performance.

8.6.2 Collector mounting frame

The collector mounting frame shall in no way obstruct the aperture of the collector, and shall not significantly affect the back or side insulation. Unless otherwise specified (for example, when the collector is part of an integrated roof array), an open mounting structure shall be used which allows air to circulate freely around the front and back of the collector. The collector shall be mounted such that the lower edge is not less than 0.5 m above the local ground surface. Currents of warm air, such as those which rise up the walls of a building, shall not be allowed to pass over the collector. Where collectors are tested on the roof of a building, they shall be located at least 2 m away from the roof edge.

8.6.3 Tilt angle

The collector shall be tested at tilt angles such that the incidence angle modifier for the collector varies by no more than ±2 % from its value at normal incidence. For single glazed flat plate collectors, this condition will usually be satisfied if the angle of incidence of direct solar radiation at the collector aperture is less than 20°.

NOTE For many collectors, the influence of tilt angle is small, but it can be an important variable for specialized collectors such as those incorporating heat pipes.

8.6.4 Collector orientation outdoors

The collector may be mounted outdoors in a fixed position facing the equator, but this will result in the time available for testing being restricted by the acceptance range of incidence angles. A more versatile approach is to move the collector to follow the sun in azimuth, using manual or automatic tracking.

8.6.5 Shading from direct solar irradiance

The location of the test stand shall be such that no shadow is cast on the collector during the test.

8.6.6 Diffuse and reflected solar irradiance

 © UNBS 2009 – All rights reserved

For the purposes of analysis of outdoor test results, solar irradiance not coming directly from the sun's disc is assumed to come isotropically from the hemispherical field of view of the collector.

In order to minimize the errors resulting from this approximation, the collector shall be located where there will be no significant solar radiation reflected onto it from surrounding buildings or surfaces during the tests, and where there will be no significant obstructions in the field of view. With some collector types, such as evacuated tubular collectors, it may be equally important to minimize reflections on both the back and the front fields of view.

Not more than 5 % of the collector's field of view shall be obstructed, and it is particularly important to avoid buildings or large obstructions subtending an angle of greater than approximately 15° to the horizontal in front of the collectors. The reflectance of most rough surfaces such as grass, weathered concrete or chippings is usually low enough so no problem is caused during collector testing.

Surfaces to be avoided in the collector's field of view include large expanses of glass, metal or water. In most solar simulators the simulated beam approximates direct solar irradiance only. In order to simplify the measurement of simulated irradiance, it is necessary to minimize reflected irradiance. This can be achieved by painting all surfaces in the test chamber with dark (low reflectance) paint.

8.6.7 Thermal irradiance

The performance of some collectors is particularly sensitive to the levels of thermal irradiance. The temperature of surfaces adjacent to the collector shall be as close as possible to that of the ambient air in order to minimize the influence of thermal radiation. For example, the outdoor field of view of the collector shall not include chimneys, cooling towers or hot exhausts. For indoor and simulator testing, the collector shall be shielded from hot surfaces such as radiators, air-conditioning ducts and machinery, and from cold surfaces such as windows and external walls. Shielding is important both in front of and behind the collector.

8.6.8 Airspeed

The performance of many collectors is sensitive to air speeds. In order to maximize the reproducibility of results, collectors shall be mounted such that air can freely pass over the aperture, back and sides of the collector. The average value of air speed parallel to the collector aperture, taking into account spatial variations over the collector and temporal variations during the test period, shall be 3 ms^{-1} ± 1 ms^{-1}. Where necessary, artificial wind generators shall be used to achieve these air speeds. Collectors designed for integration into a roof may have their backs protected from the wind; if so, this shall be reported with the test results.

8.7 Climate

The change in weather from year to year has been shown to cause variations of up to ±10 % in the annual solar energy supplied in a given system.

In a given year, variations in performance between similar systems in the same locality may occur because of varied local conditions, for example, exposure to wind; cold water feed temperature, etc.

The effect of latitude may also be significant. Annex D provides information on calculating the annual solar energy supplied at various locations.

8.8 Other factors

There are several other factors that will affect system performance, not least of which is adequate insulation of the preheat vessel, hot water cylinder and the pipes leading to and from the solar collector. It is recommended that the insulation applied to the preheat vessel and cylinder should be not less than the equivalent of 80 mm of glass fibre and not less than 19 mm on the pipes. Water contained in the pipework between the preheat vessel and the hot water cylinder may lose much of its heat to the surroundings when no draw-off is taking place. The distance between the two vessels should therefore be kept to a minimum and the connecting pipework should be well insulated. The temperature differences (between the collector and the preheat vessel) at which the circulating pump is switched on and off can affect the amount of solar energy supplied.

© UNBS 2009 – All rights reserved

For a typical flow rate of water through the collector, say 0.02 kg/s per square metre of collector area, it is desirable that the temperature difference at which the pump is switched off should not exceed about 1.5 K, and the temperature difference at which it is switched on should not exceed about 4 K.

Provided that the flow rate of water through the collector exceeds the equivalent of 0.01 kg/s per square metre of collector area, the thermal performance of the system is not significantly affected by the value chosen (see Clause 7). Solar heating systems may be designed in a variety of ways (see Clause 5 for examples) and the type of design may influence the thermal performance. For instance, within the general class of systems having a preheat vessel, one factor that might significantly affect thermal performance is the incorporation of a heat exchanger (as in an indirect system). Provided that the heat exchanger is large enough, however, the performance will be similar to that of a direct system. Computations show that the energy supplied will be at least 95 % of the figures quoted in this clause, if the heat exchanger is at least as large in relation to the preheat vessel as those specified in BS 1566.

The thermal capacity of the collector when full of fluid has a small effect on the system performance.

9 Electrical considerations

9.1 General

The electrical component of the system shall be designed and installed in accordance with relevant regulations and standards.(check with the Editor on this)

9.2 Electrical installation

All wiring and apparatus shall be installed in accordance with the requirements of IEC 60364.

9.3 Electrical safety

The Uganda Wiring Regulations require any wiring and apparatus to be properly installed and protected to ensure safety, particularly from the effects of fire and shock. This protection is achieved by adequate insulation of all conductors and apparatus and the provision of effective earthing arrangements to ensure that, in the event of a fault, the installation is automatically disconnected from the supply to prevent danger. In conventional household plumbing systems, all items that may be touched, i.e. taps and pipework, shall be effectively bonded to earth. Solar water heating systems vary in their design and construction and, particularly in a mixed metal system; advice should be sought from the component manufacturers for the most appropriate protection technique to be applied.

9.4 Controls

Controls shall be in accordance with the requirements set out in EAS 205.

9.5 Avoidance of electrical interference

Where applicable, the requirements given in IEC CISPR 14 and IEC 61000-3-2 shall be complied with, to avoid interference with other systems.

9.6 Testing

All electrical wiring and apparatus associated with a solar water heating system shall be inspected and tested in accordance with IEC 60364-6 to determine the correct polarity, effectiveness of earthing and adequacy of the insulation.

 © UNBS 2009 – All rights reserved

10 Installation

10.1 General

Firms marketing solar water heating systems shall ensure that a potential customer is provided with adequate information about the layout and expected performance of systems similar to that proposed to be installed. It is suggested that literature describing typical systems should include information of the kind recommended in Clause 13 to be provided about a particular installation after completion. The attention of potential customers shall be drawn to the statutory requirements mentioned in Clause 4.

10.2 Pre-installation procedure

The installer of solar heating systems may expect to meet either of two basic situations as follows.

a) Installations that form part of the construction of a new building, where the solar heating system is part of the specification.

b) Installations added to existing buildings.

In each case the installer shall ensure the availability of the following information.

1) The required location on the outside of the structure for the collector. This should preferably be in the form of a drawing.

2) The methods of fixing to be employed, as recommended by the manufacturer or the designer, to ensure security and weather tightness.

3) Drawings showing the general layout of the solar water heating system and, in the case of existing buildings, details of the existing hot water supply and its interconnection with the new equipment.

4) A schedule of the components required to be fitted.

5) A specification of the heat transfer fluid to be used.

6) The suitability of existing or proposed roof structure to accommodate the installation reliably.

7) The system size should meet the estimated hot water consumption of the facility.

8) Confirmation that clearance of the statutory requirements has been obtained (see Clause 4).

10.3 Installation procedures

10.3.1 General

The installer should comply with statutory codes applicable to the works determined to be carried out.(contact the Min works)

10.3.2 External work

The fixing position should be inspected by a person experienced in such operations or works, and suitably qualified for the purpose. Fixings commensurate in specification with the weight and dimensions of the collector should be prepared in situ, in accordance with the manufacturer's recommendations, prior to raising the collector up to the fixing position. Many solar collectors are supplied to site unglazed, the fitting and water sealing being left to be carried out by the installer. It is recommended that, where possible, these processes be carried out at ground level prior to raising and fixing. The installer should satisfy himself that the glazing seals are sound, whether or not the collector is supplied glazed. This also is best determined at ground level. In view of the difficulties of handling collectors on a roof in adverse weather conditions, suitable practices should be employed to permit installation to be carried out with due regard to the maintenance of the health

© UNBS 2009 – All rights reserved

and safety of all concerned. Attention should be paid to special lifting requirements which may be detailed by the manufacturer. Solar collectors are specifically designed to convert the solar radiation into heat and may become extremely hot when exposed to sunlight. During installation and before the circulating liquid is added, temperatures well in excess of the boiling point of water may be attained. Care should be taken to avoid contacting the metal parts with bare skin because, apart from the risk of burns, the shock may dislodge the installer from his foothold. It is recommended that collectors should be shaded with a removable cover (e.g. heavy paper secured by adhesive tape) during installation to reduce the risk of burns, and also to reduce the risk of damage to the collector.

10.3.3 Internal procedures

With a new building, the installation of the additional plumbing services relating to the solar heating system will normally form part of the plumbing and heating specifications. Components can therefore be installed and hydraulically tested through at the same time. With installations to existing systems, the plumbing services will require the draining down of the existing hot water services. All procedures should comply with ISO 6242- 1 and with any additional manufacturer's instructions.

10.4 Collector subsystem installation

10.4.1 Collectors shall be installed in accordance with the instructions provided by the collector manufacturer or system designer, or both, and in compliance with requirements of the applicable building codes and standards.

10.4.2 Structural supports shall be constructed to support the collector under anticipated extremes of environmental conditions and to withstand local conditions and anticipated loads, such as wind, seismic, rain, snow, and ice so that the solar system does not impair the resistance to damage of the building. Neither wind loading nor the additional mass of filled collectors shall exceed the live and dead load ratings of the building, roof, foundation, or soil.

10.4.3 Structural supports shall be constructed to maintain collector tilt and orientation within design conditions throughout the life of the SHW system.

10.4.4 Joints between support structures and the building shall be caulked or flashed, or both, to prevent water leakage. Access should be provided to permit minor repairs to flashing and caulking without disturbing roof, collector supports, or collector panels.

10.4.5 Collectors shall be installed so as not to contribute to moisture build-up, rotting, or other accelerated deterioration of roofing materials.

10.4.6 Collectors and supports shall be installed in a manner that water flowing off the collector surface will not increase the potential for ice dams or cause water damage, or both, to the building or premature erosion of the roof.

10.4.7 Provisions should be taken to minimize build-up of snow upon collectors which may reduce their effectiveness.

10.4.8 Structural supports shall be selected and installed in such a manner that thermal expansion of the collector subsystem will not cause damage to the collector, structural frame, or building.

10.4.9 Collectors and supports shall not create a hazard by blocking any means of egress.

10.4.10 Safe access to components subject to deterioration or failure, such as rubber hoses, joint sealants, and cover plates, shall be provided to allow for maintenance or repair. For roof-mounted collectors, work space adjacent to collectors and provisions for safe placement of ladders should be considered.

10.4.11 Collectors should be installed giving consideration to minimizing objectionable glare.

10.4.12 Protection of collectors and components shall be provided during handling and installation to prevent damage.

 © UNBS 2009 – All rights reserved

10.4.13 Frames, braces, and fasteners used in collector installation shall be made of materials suitable for exterior location.

10.4.14 Collectors shall not reduce the fire rating of the roof as prescribed in applicable building codes.

10.4.15 Roof penetrations necessitated by a collector array should be kept to a minimum.

10.4.16 The collector array should not move with frost heave unless adequate provisions for flexing have been provided.

10.4.17 In thermosiphon systems, the bottom of the storage tank should be above the top of the collector.

10.4.18 The supply storage tank should be higher than the water heater by at least 2m.

10.5 Collector Installation

10.5.1 Collector positioning

Collectors for solar water heating are generally mounted on a building or the ground in a fixed position at prescribed angles. The angle will vary according to geographic location, collector type and use of the absorbed heat.

The collector should be positioned to maximize sunlight energy collection during the worst weather periods, receiving sunshine during the middle six to eight daylight hours of each day. Minimize shading from other buildings, trees or other collectors. Plan for lengthening shadows, as the sun's path changes significantly with the seasons (Figure 10.1).

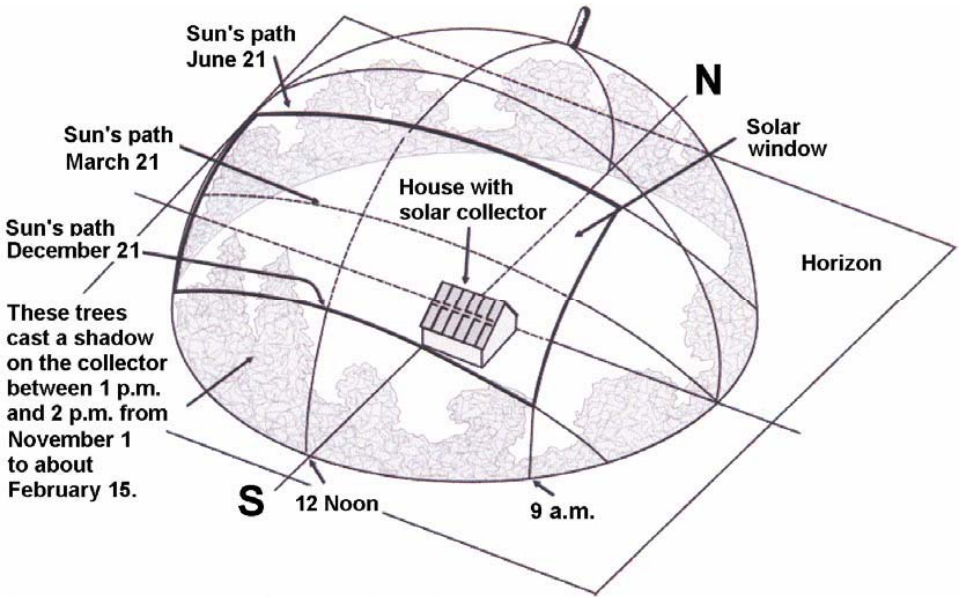

Figure 10.1 – Solar window

The collector should face directly south in the northern hemisphere and directly north in the southern hemisphere. However, facing the collector within 30° to 45° either east or west of due south or north reduces performance by only about 10 %. A compass may be used to determine true south or north. The closer to the equator, the less the need to maintain the orientation and direction of the collector, but be aware of the seasonal position of the sun in the sky and how it may affect the seasonal performance of the system.

The optimum tilt angle for the collector is about the same as the site's latitude plus or minus 15°. An inclinometer will aid in determining tilt angles. If collectors will be mounted on a sloped roof, check the roof's inclination to determine whether the collectors should be mounted parallel to the roof or at a different tilt.

© UNBS 2009 – All rights reserved

Collectors should be mounted parallel to the plane of a sloped roof unless the performance penalty is more than 30 %. The mounted collector should not detract from the appearance of the roof.

Total length of piping from collector to storage should not exceed 30 m. The longer the pipe run, the greater the heat loss and pressure drop. If a greater length is necessary, an increase in piping diameter or pump size may be required.

If the collectors will be roof-mounted, they should not block drainage or keep the roof surface from properly shedding rain. Water should not gather or pool around roof penetrations. Roof curbs may be required.

10.5.2 Wind loading

A mounted collector is exposed not only to sunlight and the rigors of ultraviolet light but also to wind forces. For example, in parts of the world that is vulnerable to hurricanes or extreme wind storms, the collector and its mounting structure need to be able to withstand intermittent wind loads up to 240 km/h (Figure 10.2). This corresponds to a pressure of about 110 Pa. Winds, and thermal contraction and expansion may cause improperly installed bolts and roof seals to loosen over time. As always, follow local code requirements for wind loading.

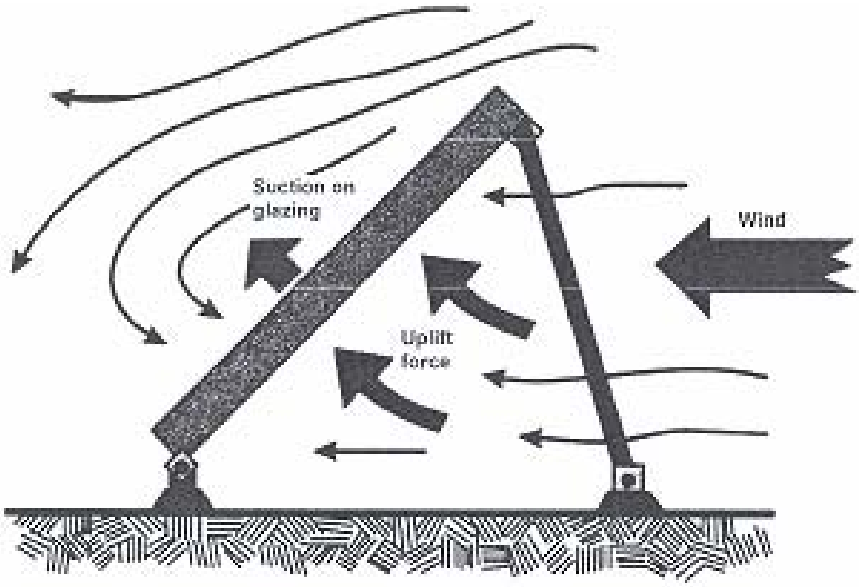

Figure 10.2 – Conceptual drawing of wind loading

Do not mount collectors near the ridge of a roof or other places where the wind load may be unusually high. Figure 10.3 shows a desirable location for a roof-mounted collector. Mounting collectors parallel to the roof plane helps reduce wind loads and heat loss.

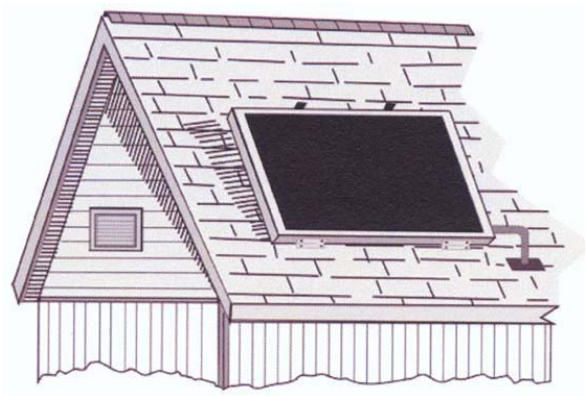

 © UNBS 2009 – All rights reserved

Figure 10.3 – Collector mounted down from roof ridge to reduce wind loading and heat losses

Determining the actual wind-load effect on collector anchors and fasteners is difficult, and most collector suppliers employ professional engineers to approve collector-mounting details. This may be required by some local code jurisdictions.

10.5.3 Ground mounting

In an alternative to roof mounting, the collector for a solar water heating system may be mounted at ground level. The lower edge of the collector should be at least one foot above the ground so it will not be obstructed by vegetation or soaked by standing water. Figure 10.4 depicts ground-mounting details.

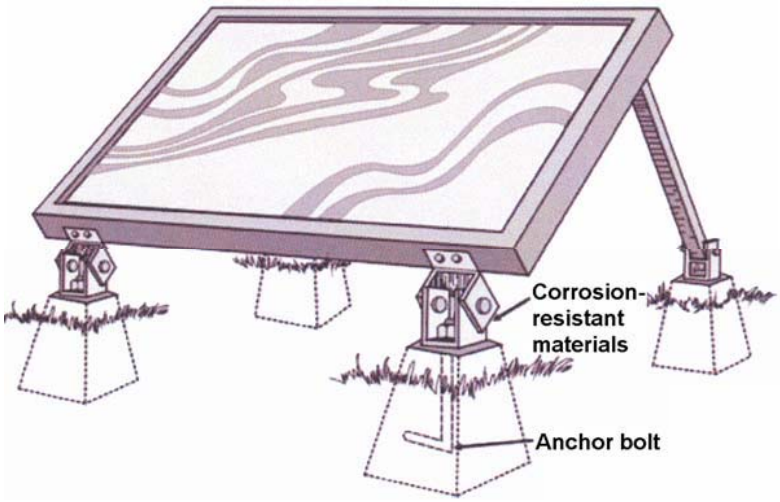

Figure 10.4 – Ground mounting

Important points to keep in mind when using ground mounting include:

1. Keep threads protected with masking tape when setting anchor bolts in concrete.

2. Avoid the use of dissimilar metals. If they must be used, isolate them with neoprene pads or silicone.

3. Coat threads with durable elastic material before tightening the nuts to prevent rusting.

4. When possible, use galvanized anchors, which are very durable. Before installing these bolts, check the threads — hot dip galvanizing sometimes puddles in the grooves.

10.5.4 Roof mounted collectors

There are four ways to mount flat-plate collectors on roof:

1. **Rack mounting** – This method is used on homes with flat roofs. Collectors are mounted at the prescribed angle on a structural frame (Figure 10.5). The structural connection between the collector and frame and between the frame and building, or site must be adequate to resist maximum potential wind loads.

© UNBS 2009 – All rights reserved

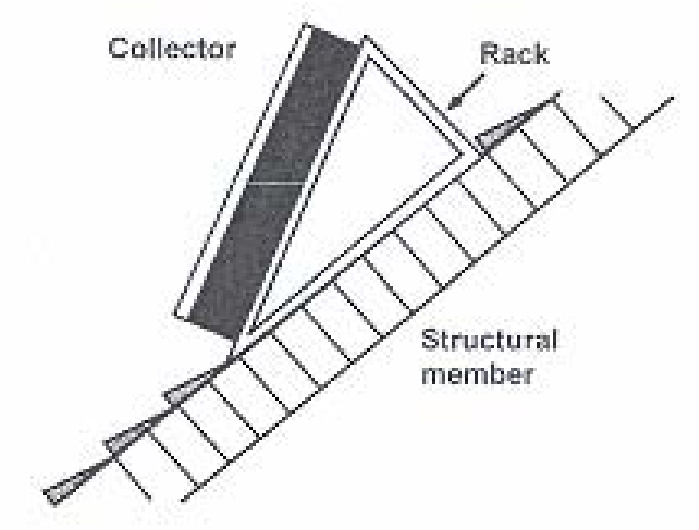

Figure 10.5 - Rack-mounted collector

2. **Standoff mounting** – Standoffs separate the collector from the finished roof surface; they allow air and rainwater to pass under the collector and minimize problems of mildew and water retention (Figure 10.6). Standoffs must have adequate structural properties. They are sometimes used to support collectors at slopes that differ from that of the roof angle. This is the most common mounting method used.

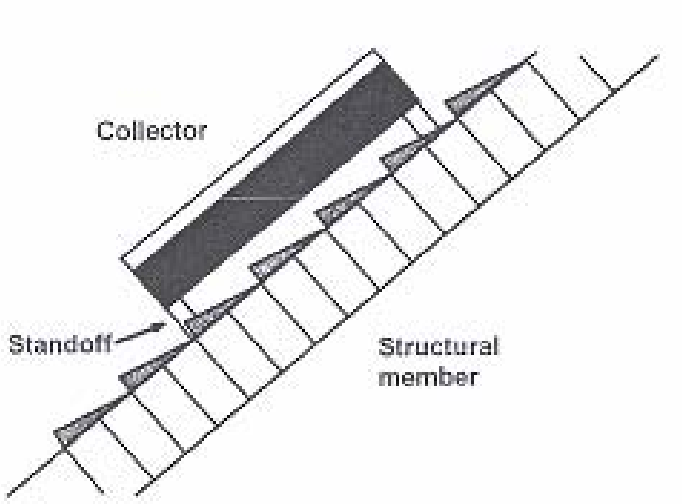

Figure 10.6 – Standoff-mounted collector

3. **Direct mounting** – Collectors can be mounted directly on the roof surface (Figure 10.7). Generally, they are placed on a waterproof membrane covering the roof sheathing. Then the finished roof surface, the collector's structural attachments, and waterproof flashing are built up around the collector. A weatherproof seal must be maintained between the collector and the roof to avoid leaks, mildew and rotting.

 © UNBS 2009 – All rights reserved

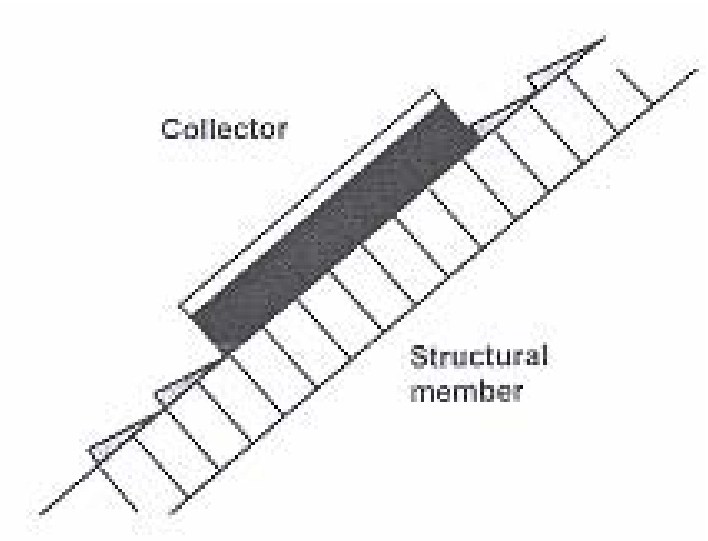

Figure 10.7 – Direct-or flush-mounted collector

4. **Integral mounting** – Integral mounting places the collector within the roof construction itself. The collector is attached to and supported by the structural framing members (Figure 10.8). The top of the collector serves as the finished roof surface. Weather tightness is crucial in avoiding water damage and mildew. Only collectors designed by the manufacturer to be integrated into the roof should be installed as the water/moisture barrier of buildings. The roofing materials and solar collectors expand and contract at different rates and have the potential for leaks. A well sealed flashing material allows the expansion and contraction of the materials to maintain a water seal.

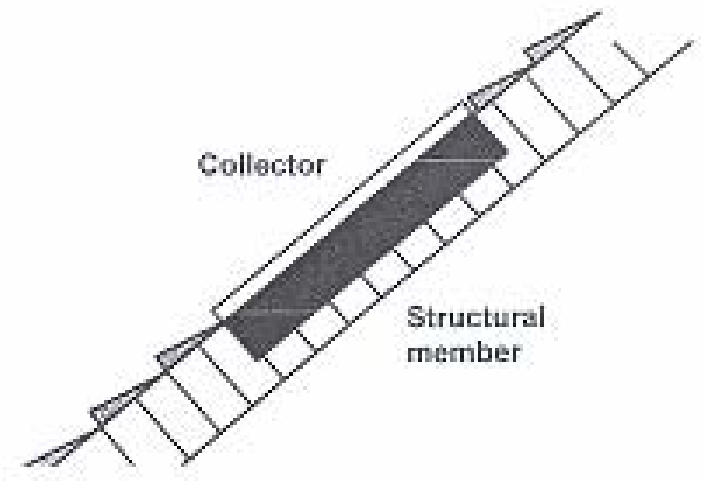

Figure 10.8 – Integral-mounted collector

10.5.5 Roof work considerations

The most demanding aspects of installing roof-mounted collectors are the actual mounting and roof penetrations. Standards and codes are sometimes ambiguous about what can and cannot be done to a roof. Always follow accepted roofing practices, be familiar with local building codes, and communicate with the local building inspector. These are prime roof work considerations:

1. Perform the installation in a safe manner.

2. Take precautions to avoid (or minimize) damage to the roof area.

© UNBS 2009 – All rights reserved

3. Position collectors for the maximum performance compatible with acceptable mounting practices.

4. Seal and flash pipe and sensor penetrations in accordance with good roofing practices. Use permanent sealants such as silicone, urethane or butyl rubber.

5. Locate collectors so they are accessible for needed maintenance.

10.5.5.1 Site preparation

Roof-mounted collectors often are placed on supports or brackets. Preparation of the roof area and procedures for anchoring to the roof members must be done carefully to avoid causing leaks or weakening the roof. In a new home installation, much of the mounting work can be performed after the roof has been framed and sheathed, but before the waterproof membrane is applied.

The best position for a collector is over the roof rafters or trusses (Figure 10.9). Avoid placing it at the roof ridge and areas where the roof slope changes, as wind loading and heat loss are greater there.

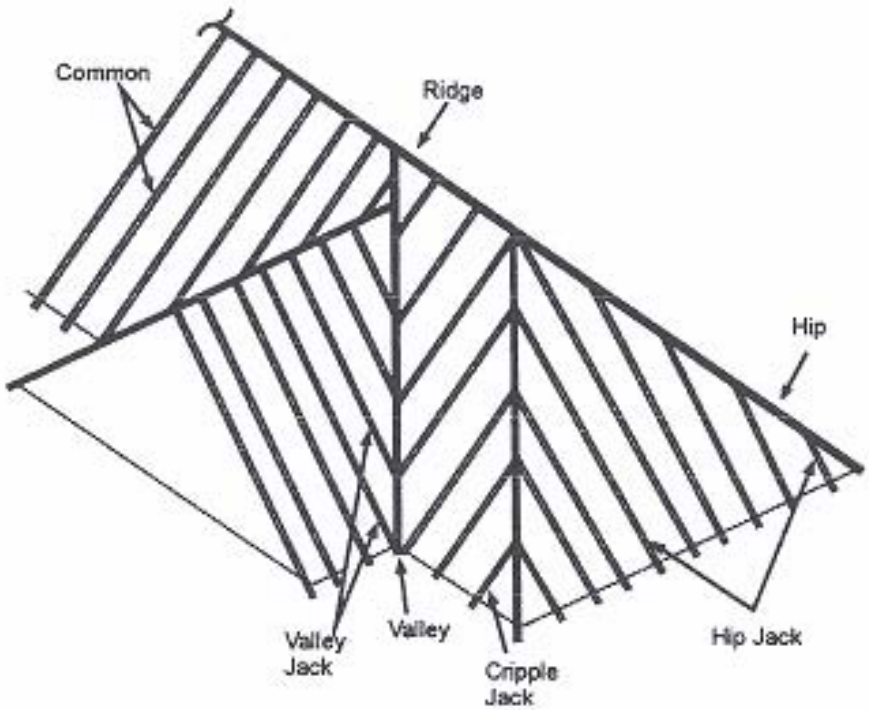

Figure 10.9 – Roof structures

The collector or its supports should be anchored to the roof rafters or trusses, not the sheathing. Following are recommended procedures:

1. Choose an appropriate site for the collector.
2. Locate the specific rafters to be used for mounting.
3. Measure and mark the roof penetration points for the anchor bolts.
4. Prepare the roof surface and install proper flashing or other waterproofing devices.
5. Properly anchor the mounting brackets to the rafters.
6. Reseal the roof (retrofit) or complete the installation of the roof (new construction).

In retrofit situations, rafters or roof trusses may be located from inside an attic if the space is large enough to permit access. Very small galvanized nails may be driven up beside the rafter at the desired anchoring points; this locates the points for the workers on the roof, and roof preparation can begin.

 © UNBS 2009 – All rights reserved

If access to the attic is not adequate, trusses can be located by looking for nails in the fascia board. They indicate the location and spacing of the trusses. Locate the mounting points by measuring across the roof ridge and popping a chalk line between the ridge and the fascia along the run of the truss (Figure 10.10). The truss may not be perfectly straight, so the chalk line will be close to (but not precisely on) the truss run. Many installers use the variation in tone associated with external hammer blows to locate the run of the truss. A mechanical or digital truss finder can also be used to locate the position of the truss.

After the anchoring points have been selected, prepare the roof for penetration.

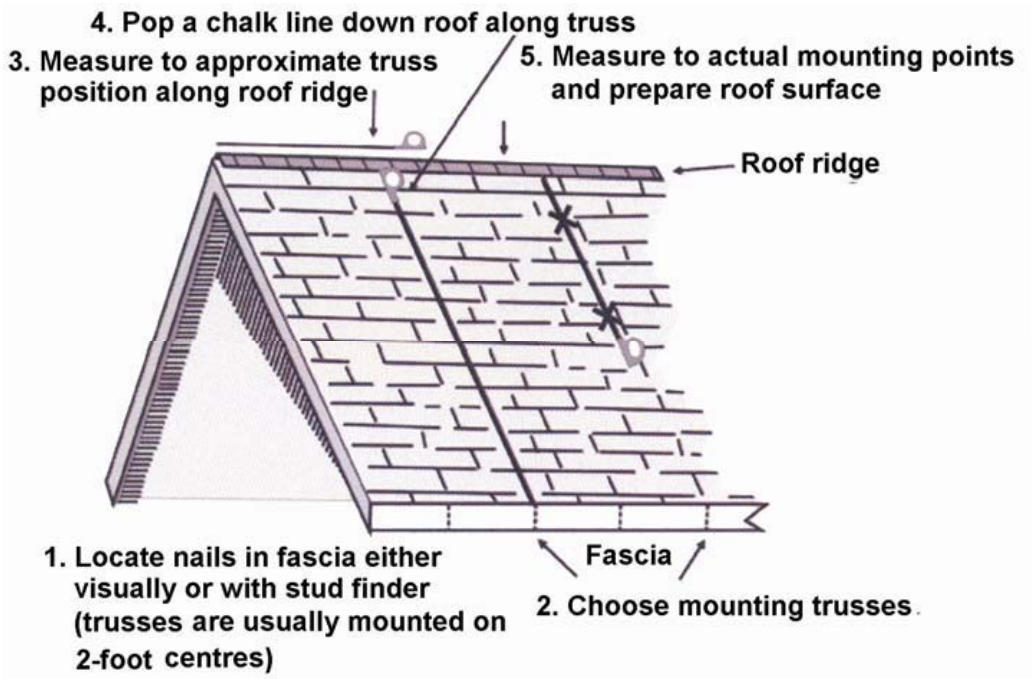

Figure 10.10 – A method of locating mounting points

10.5.5.2 Roof penetration

Modern roof finish materials cover a wide range. The most commonly used materials are asphalt or fibreglass shingles, clay or concrete tile, iron sheets tar and gravel.

Shingles are applied in an overlapping pattern, nailed, or stapled to the roof sheathing below. Old, brittle shingles may break underfoot. Use care until the condition of the shingles is ascertained. Brackets can be mounted directly over pliable shingles; no special preparation is necessary. Holes for the mounting bolts may be drilled through the shingles. The entire penetration shall then be sealed.

Tile roofs require extensive preparation. When walking on these roofs, care must be taken not to break the tiles or slip on loose tiles. On barrel tiles, never walk on the crowns. Broken tiles must be replaced, increasing installation time and cost. Tiles in the area of the anchoring spots should be sawed out. Remove as few tiles as possible, because the area must be sealed later to protect the underlying watertight membrane. When the tiles are removed, the exposed waterproof membrane may be treated as if it were an asphalt shingle roof. The area where tile was removed may be filled with cement that is colored and molded to correspond to the undamaged roof configuration.

There are many ways to penetrate tile roofs. Most methods used to seal the tile will depend on the type, shape and base material of the tile. Cement, clay, ceramic rounded, or flat tiles may require different methods of attaching the collector to the structure and sealing the roof penetrations.

For example, installation methods can include penetrating the tile and attaching the mounting hardware to the roof truss assembly and flashing the riser as shown in Figure 10.11 or attaching the mounting hardware to the roof and using a flashing that allows installation of the tile around the mounting hardware.

© UNBS 2009 – All rights reserved

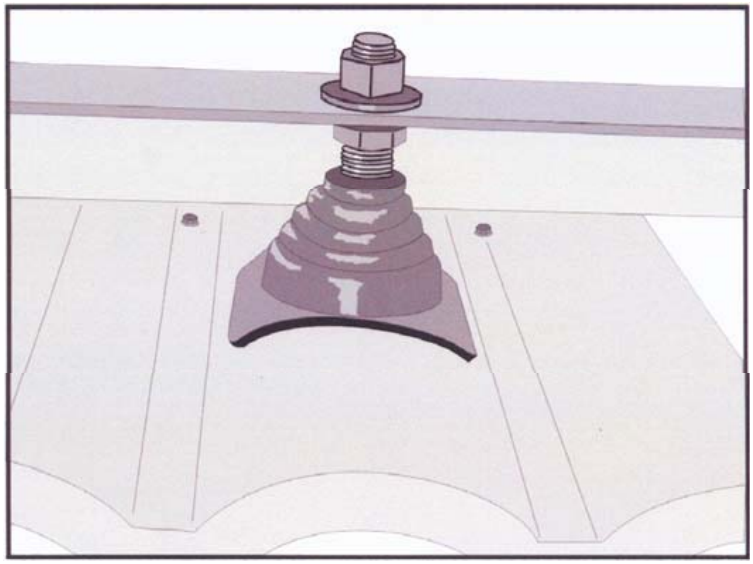

Figure 10.11 – Tile roof mount

Or, the solar collectors may be supported above the tile on a rack or bracket as shown in Figure 10.12.

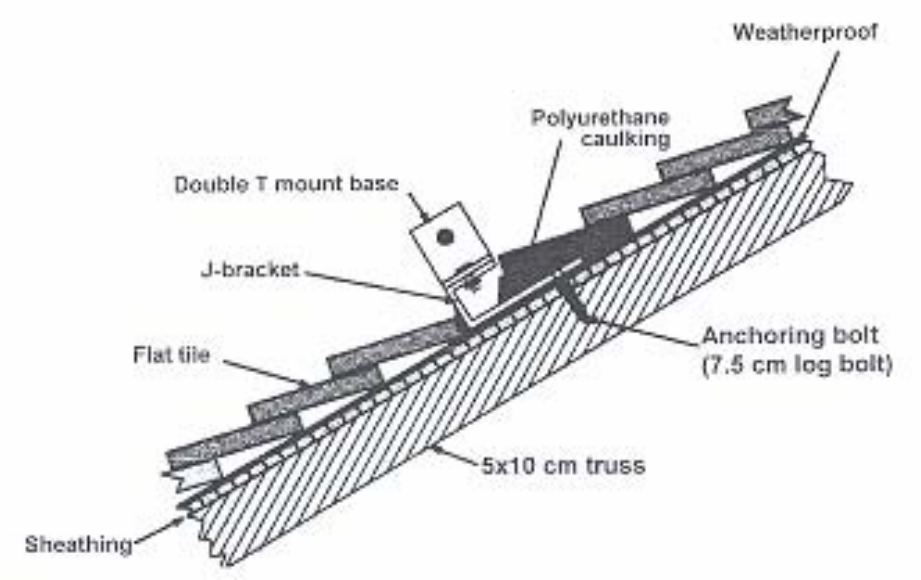

Figure 10.12 – Tile roof-bracket mounting

Yet another method may include using lead roof vent stack flashing that can be shaped to the style and contour of the tile and sealed on the top with a cap or the mounting hardware support base as shown in Figure 10.13.

© UNBS 2009 – All rights reserved

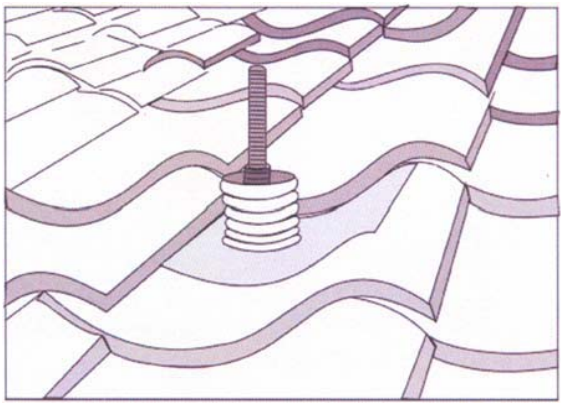

Figure 10.13 – Vent stack flashing

A built-up, roof is composed of alternating layers of weather-resistant membrane (such as roofing felt) and tar, which is covered with loosely bound gravel that reinforces the semi-viscous roof tar and protects it from excessive heat and ultraviolet rays. This roof finish is typically used on flat roofs. The rafters in this case can be located by hammering on the roof surface — the roof pebbles will not jump when a rafter is struck.

Remove all of the gravel under the mounting bracket and for a space of at least four inches in each direction from its edges. When bolts penetrate the waterproof membrane, pitch pans will be required. Pitch pans can be made from six-ounce sheet copper, galvanized iron or lead. Figure 10.14 shows a pitch pan.

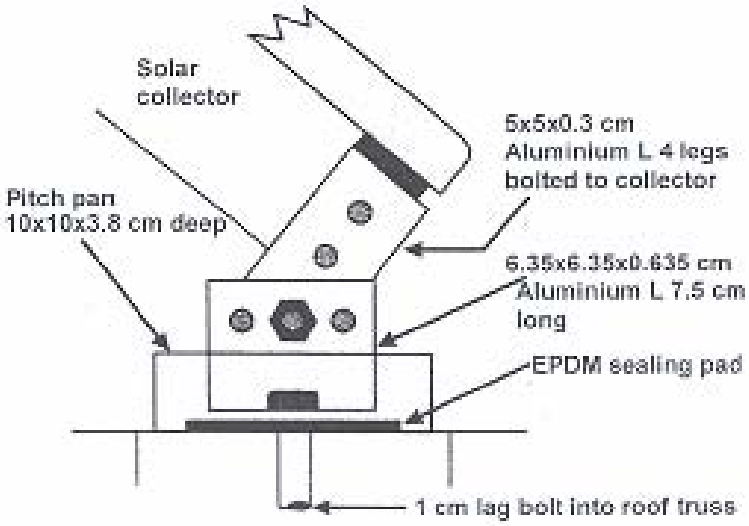

Figure 10.14 – Pitch pan detail

Use high quality roof cement and four-inch strips of asphalt-impregnated roofing to waterproof the penetration. Also, avoid creating any "pools" in the pitch pan sealing material where water can accumulate. Then cover it with gravel.

10.5.5.3 Bracket mounting and sealing

Brackets attach the collector to the roof. The brackets themselves must be securely attached to the underlying rafters or trusses.

If the site has working room in an attic or crawl space, wood or angle iron spanners can be used to secure the mounting brackets, acting as an anchor for a threaded rod. Spacers must be pre-drilled and placed directly under the threaded rod to relieve any tension pulling down on the roof deck. A clip angle or collector mounting bracket is attached on the "roof" end of the threaded rod. Figure 10.15 illustrates spanner mounting

© UNBS 2009 – All rights reserved

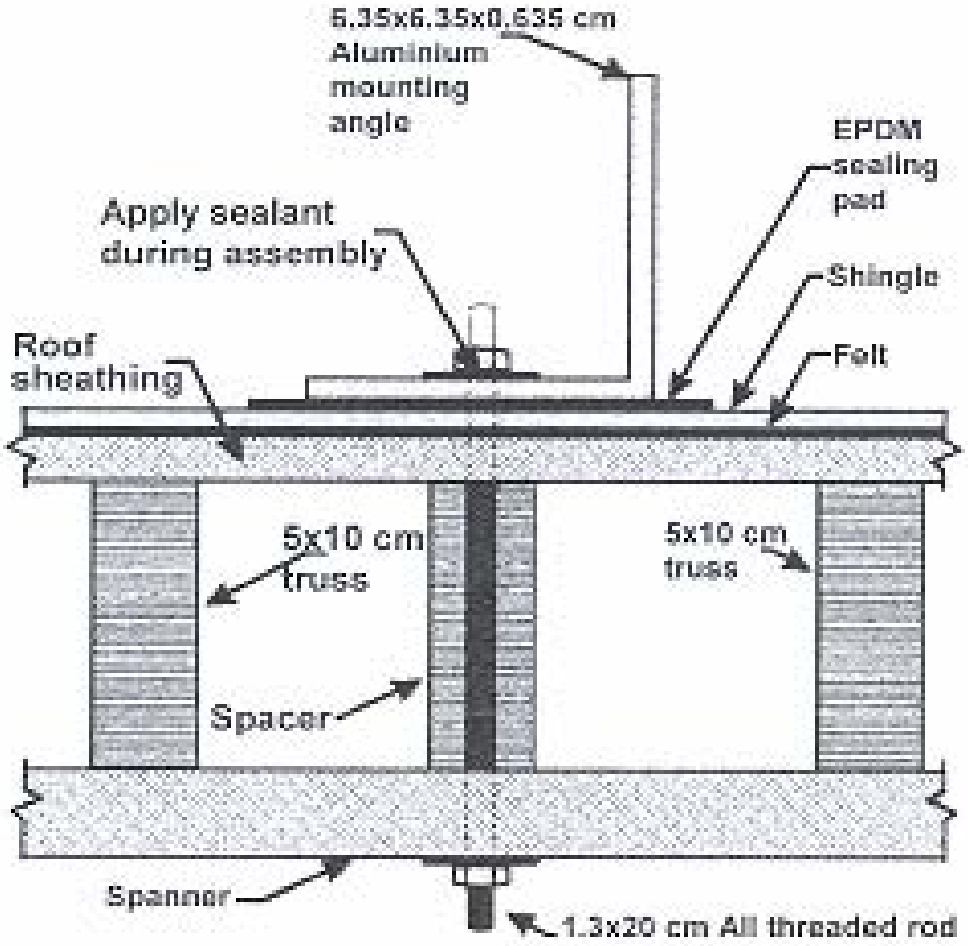

Figure 10.15 – Spanner mounting

If under-roof access is not available, J-bolts or lag bolts may be required. J-bolts must be long enough to grip under a rafter and still leave enough threading outside the roof sheathing for easy bracket and nut installation. (Follow the collector manufacturer's length and diameter recommendation to the letter.)

To mount a lag bolt:

1. Drill a pilot hole of 50 – 75 % of the bolt diameter into the centerline of the truss to the actual length of bolt penetration.

2. Liberally apply a high quality sealant around the pilot hole opening.

3. Place the pre-drilled sealing pad and mounting bracket angle on the roof.

4. Apply the flat washer, lock washer and bolt with a high quality sealant between the bracket and flat washer.

Figure 10.16 shows an acceptable sequence in lag bolt mountings.

 © UNBS 2009 – All rights reserved

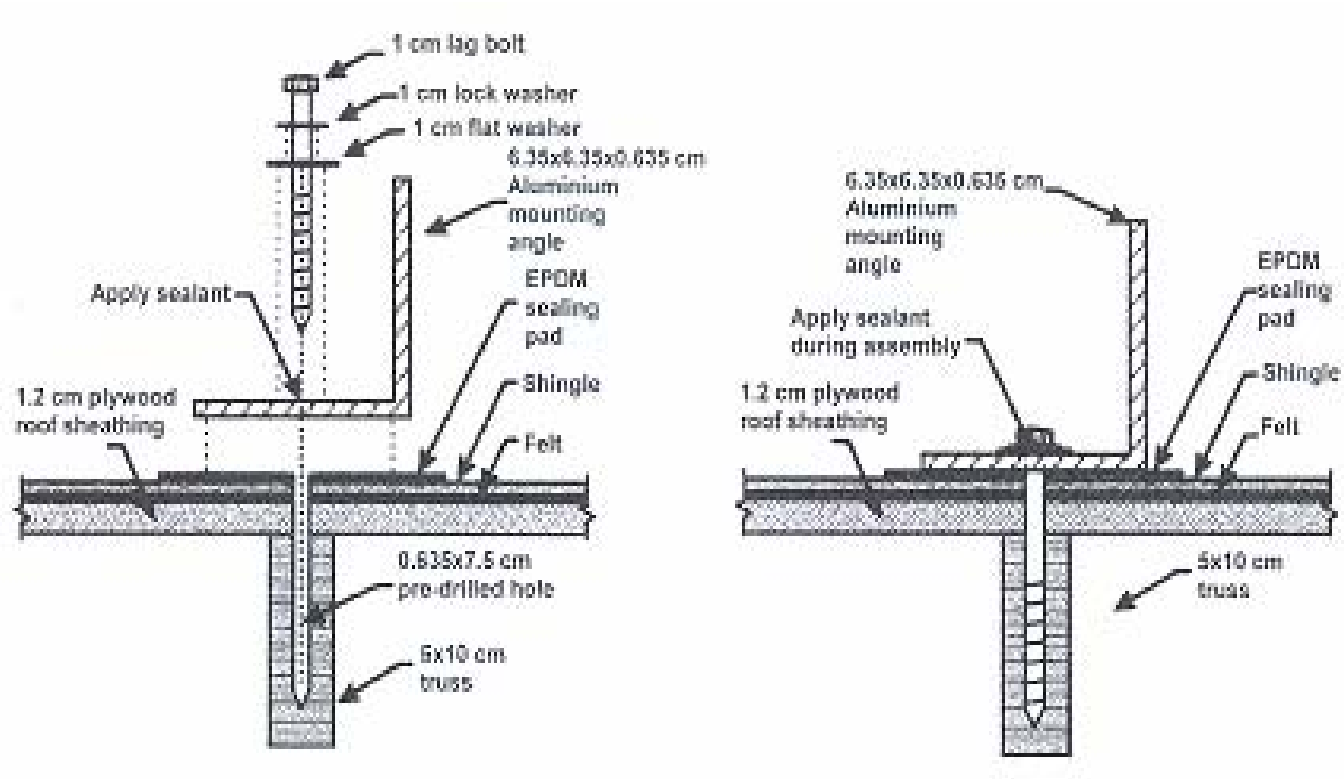

Figure 10.16 – Lag-bolted mounting assembly

For J-bolt mounting as illustrated in Figure 10.17:

1. Drill a hole directly beside the rafter; the hole size must be slightly larger than the bolt diameter.
2. Fit the bolt through the mounting bracket (angle)
3. Insert the bolt (hook side first) through the hole in the roof.
4. Work the hook underneath the rafter.
5. Pull the hook snug against the rafter before tightening the nut.
6. Use double nuts or lock washers to securely fasten the mounting bracket t the J-bolt.

© UNBS 2009 – All rights reserved

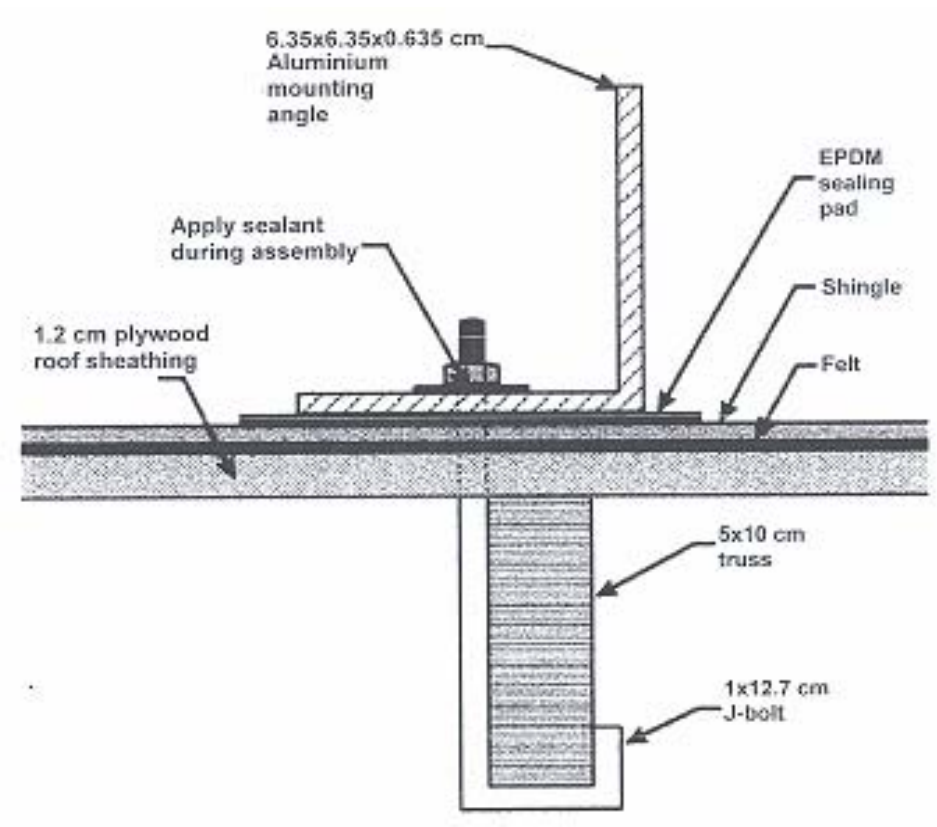

Figure 10.17 – J-bolt mounting

10.5.5.4 Collector attachment

If the collector is to be rack-mounted make sure the rack (if adjustable) is tilted to the desired angle and the collector (when mounted) will drain by gravity. Follow the collector manufacturer's guidelines regarding rack adjustment and attachment. Make sure the rack is structurally sound and firmly secured and not skewed. If it is skewed, tightening the collector in place may break its glass cover. If collector and rack are made of dissimilar metals, provisions must be made to prevent galvanic corrosion.

If the collector is to be mounted with standoffs, allow at least one inch of clearance between the collector bottom and roof surface to prevent water or material build-up. The bracket-to-collector attachment must be strong enough to withstand the maximum expected wind loads. Follow the manufacturer's instructions.

After the collector has been mounted, check the entire assembly for rigidity. As a rule of thumb, if you can shake it by hand, it is not fastened securely enough.

10.5.5.5 Roof piping and penetrations

Select the spots to penetrate the roof for the piping runs close to the mounted collector. In some cases it may be necessary to pipe both the feed and the return lines through the same penetration. In gravity drain systems, the feed line should penetrate the roof below the collector. Pitch all lines at least 0.635 cm per 0.3 m of pipe run to allow proper drainage. Make roof penetrations between trusses to allow for thermal expansion and slight flexing of the pipe from wind buffeting.

There are several methods of roof penetration that comply with accepted practices of building codes. If there are any conflicts between the recommendations made here and those of building codes, follow the building codes.

One method of providing a watertight penetration uses a standard plumbing roof vent stack flashing (Figure 10.18). Remember to protect the rubber or plastic boot from the sun.

 © UNBS 2009 – All rights reserved

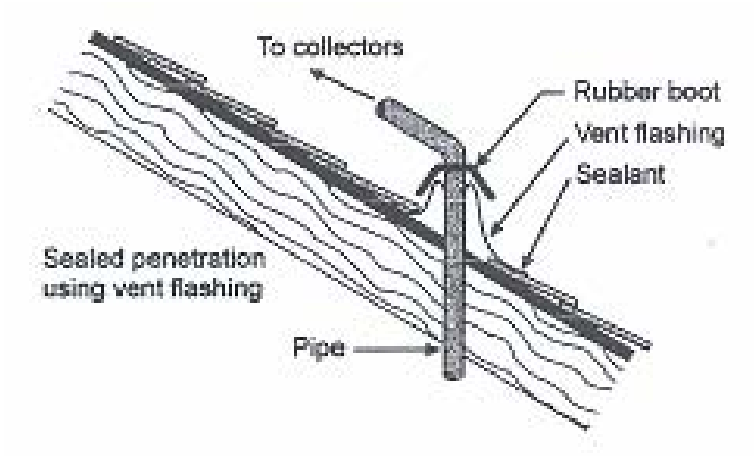

Figure 10.18 – Penetration with vent stack flashing

Another method is to make a flat copper flashing with an oversize collar that is penetrated by the fluid line (Figures 10.19 thru 10.21). Note the base of the flashing should be mounted under the shingle above. A flashing cap is then soldered to the pipe at their junction. This type of flashing is available for both pipe only (Figure 10.20), and pipe and wire penetrations (Figure 10.21).

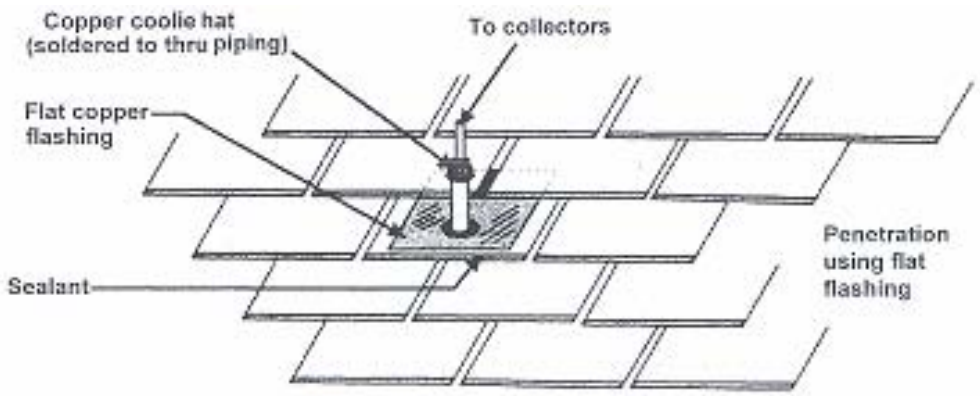

Figure 10.19 – Penetration with flat flashing

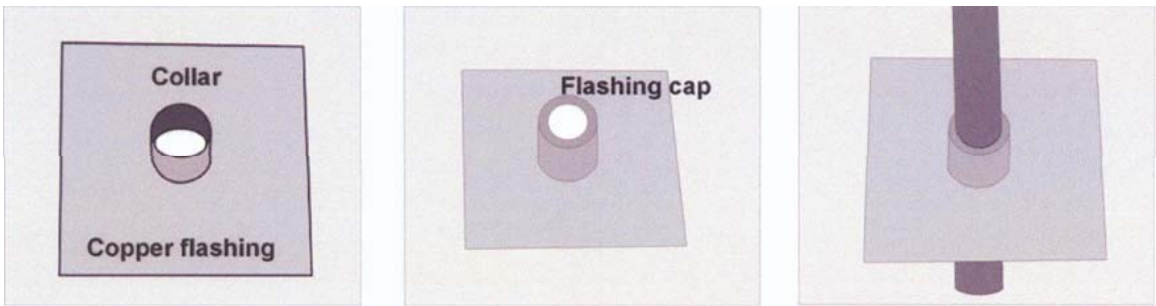

Figure 10.20 – Copper flashing for pipe only

© UNBS 2009 – All rights reserved

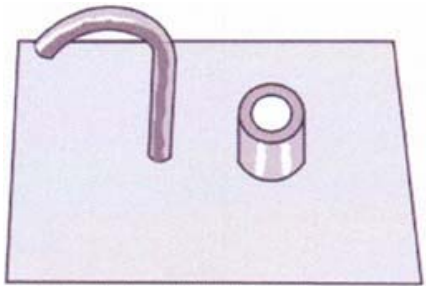

Figure10.22 – Copper flashing for both pipe and wiring

A less desirable method brings both pipes up through a pitch pocket (Figure 10.22). Such an open bottom pitch pocket requires periodic maintenance and inspections over the life of the solar system.

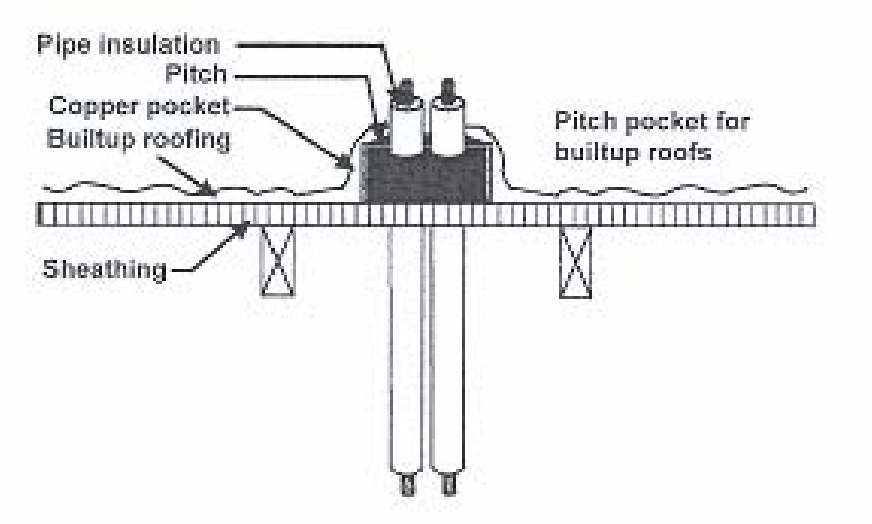

Figure 10.22 – Penetration with pitch pocket

For larger commercial installations on flat, built-up roofs, the installer should follow specific recommendations of the most current NRCA Roofing and Waterproofing Manual.

10.5.5.6 Valves

Most solar systems may have valves on the roof for venting, filling, freeze protection and other aspects of operation. In order to eliminate air traps, air-vent valves must be at all high points in the system where air is most likely to accumulate (Figure 10.23).

 © UNBS 2009 – All rights reserved

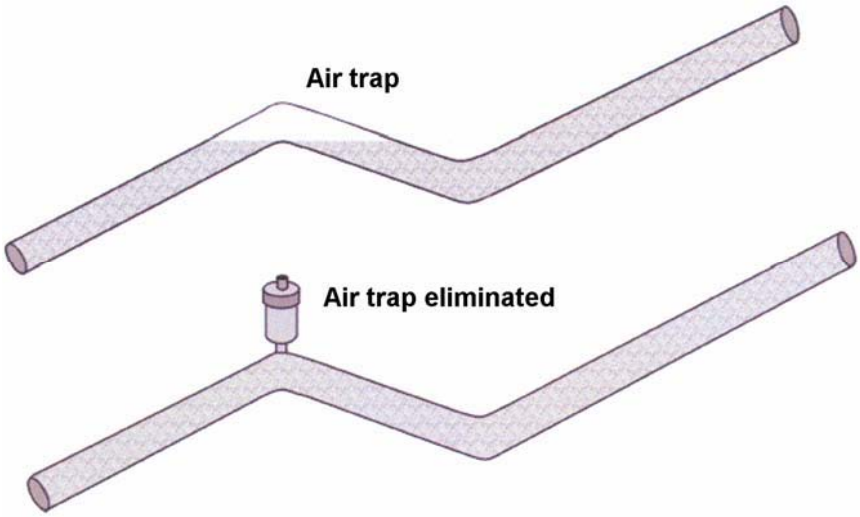

Figure 10.23 – Elimination of an air trap with an automatic air vent

If multiple collector arrays are used, an air vent should be installed on each array. The system must be piped to prevent air traps and allow for gravity draining (Figure 10.24).

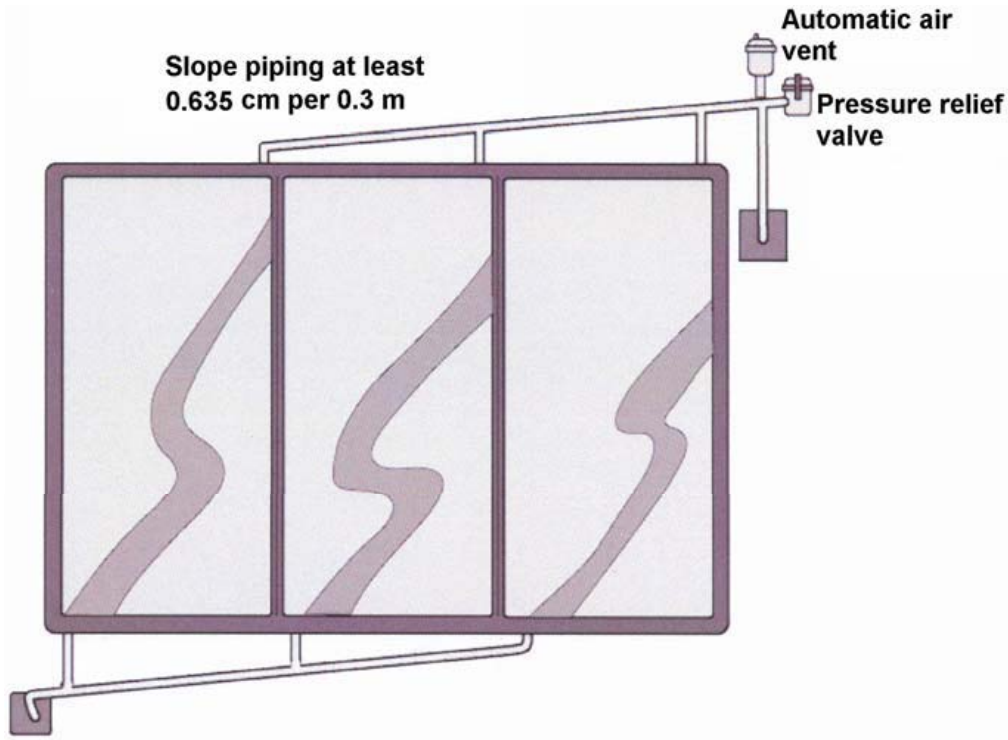

Figure 10.24 – Piped and vented collector array

By code, a pressure relief valve is required in any portion of the system that can be isolated that contains a pressure producing fixture. For example, a circulating pump might have isolation valves so it can be removed for maintenance, but it is not considered a pressure producing fixture from the standpoint of the risk of bursting the system, so you don't need a pressure relief valve on this part of the system. However, the collector, or tanks with heater elements (connected or not), and even tankless water heaters are pressure producing fixtures, so if any can be isolated, there must be a pressure relief valve somewhere in that portion of the isolated loop that contain them. Most solar water heaters have the pressure relief valve for the collector loop installed at the collector. Special care should be taken to ensure the hot overflow from this valve does not come into contact with people or pets; some codes specify how this should be accomplished. The discharge

© UNBS 2009 – All rights reserved

pipe must be large enough to safely handle the overflow volume from indirect antifreeze systems, which usually operate at low pressure. Special low-pressure relief valves are often used on these systems.

10.5.5.7 Piping collector arrays

Cover all roof piping with insulation. Protect the insulation from degradation through exposure to ultra violet (UV) light by completely covering it with UV-resistant paint, or metallic or vinyl tape. Painted insulation will need to be repainted periodically, as the paint will deteriorate over time.

Slip the pipe through the insulation sleeve before soldering, or slit and re-glue insulation in difficult areas. Insulation that has been slit must be glued or taped properly because it will shrink from the pipe as it ages. Insulate joints only after the entire system has been pressure-tested for leaks.

The collectors in multiple-collector arrays should be plumbed in parallel unless the manufacturer specifies otherwise. Parallel, reverse-return piping (Figure 10.25) ensures a fairly uniform flow in a collector array with no more than four collectors. Use 1.9 cm pipe for the interconnections. A parallel connection without reverse return leads to uneven flow throughout the collector array.

If the array cannot be piped in parallel with reverse return, use flow-balancing valves to reduce the flow in the collector of least resistance, equalizing the flow rate through the entire array (Figure 10.25 b). A balancing valve is a fairly expensive valve with which accurate flow adjustment may be made. Gate valves should not be used for this purpose, as they will not allow accurate flow equalization over time, but ball valves have been used successfully for balancing.

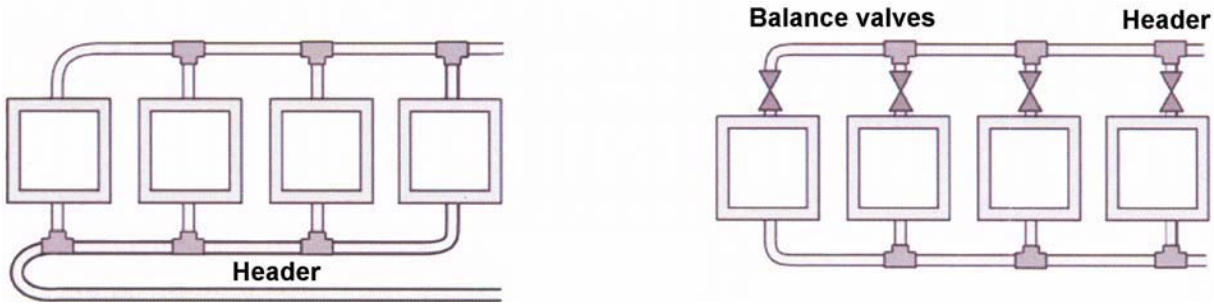

Figure 10.25 – Multiple collector piping arrangements

Avoid flexible connectors from the array header to the individual collectors, as they have been shown to fail or leak over time. However, flexible hoses may be acceptable in indirect antifreeze systems, which are not subject to high operating pressures.

11 Component installation

11.1 General

This clause outlines recommended installation and servicing minimum practices needed to provide an effective SDHW system operation.

11.2 Piping, ducting and ancillary equipment

11.2.1 Piping, ducting, and equipment shall be located so as not to interfere with normal operation of windows, doors, or other exit openings. Piping, ducting, and equipment shall be installed in a manner to prevent damage to such piping, ducting, and equipment; prevent injury to persons; and in accordance with the manufacturer's instructions and the applicable building codes.

11.2.2 Piping and ductwork shall be selected and installed to withstand the expected operating and stagnation temperatures and pressures without excessive air leaking, sagging, or corrosion. Piping shall not leak.

 © UNBS 2009 – All rights reserved

11.2.3 Pipe hangers, supports, and expansion devices shall be provided to compensate for thermal expansion effects and to provide adequate support. Care shall be exercised during their installation to prevent damage to connections on the collector or the collector casing. Pipe hangers shall not short circuit insulation by creating a thermal bridge. Expansion devices shall not prevent draining. Pipe supports should not compress the insulation.

11.2.4 Standard pipe fittings should be used wherever possible.

11.2.5 Pipe and duct runs should be as short as practical with as few ells and bends as possible.

11.2.6 Joints shall be made with materials selected for durability within the expected operating temperatures and pressures for the fluid selected. Soft solder may not be adequate for joints near collectors under stagnation conditions. Soldering fluxes shall be water soluble.

11.2.7 Underground piping shall be installed below the frost line. Underground piping subject to vehicular traffic shall be installed to withstand the anticipated static and dynamic loads. The trench shall be free of sharp objects surrounding the pipe.

11.2.8 Piping shall be installed to facilitate drainage of liquid systems. Piping shall be pitched at the minimum rate of '/s in./ft (1 cm/m) towards the drain.

11.2.9 Suitable connections shall be provided for filling, draining, and flushing liquid systems. Interconnecting piping or ducting shall be installed to minimize flow restrictions, prevent air blocks, and to provide a balanced flow.

11.2.10 Where trapped air could impair the performance of a system or prevent drainage, air bleed provisions shall be provided at those high points so that air can be purged from the system.

11.2.11 Where heat losses may occur, insulation shall be provided on piping and ductwork. Insulation shall be suitable for the application and location. Insulation shall be protected against degradation due to weather or environmental conditions. Underground installations shall be protected to prevent deterioration of insulating properties by compression, water penetration, or bacterial action.

11.2.12 Piping shall be leak tested before enclosing, backfilling, or insulating. Caution shall be exercised so that excessive pressure is not applied to the system.

11.2.13 In an SDHW systems the air tightness of the ductwork is critical to system efficiency. All joints in rigid and in flexible ductwork shall be sealed. Brackets or hangers shall be used to securely support, suspend, or hang ducts. At no time shall duct supports penetrate the duct itself.

11.2.14 The direct joining of dissimilar metals in liquid systems that may result in accelerated corrosion should be avoided. Where it is necessary to joint dissimilar metals in the same system, they should be separated by electrically insulated joints or suitable intermediate metals.

11.2.15 When a liquid is used as the heat transfer fluid in a SDHW system and quick-closing valves are employed in the design, the piping system shall be able to control or withstand potential "water hammer." Water hammer arresters shall be in compliance with local codes.

11.2.16 Grounding electrical systems to SDHW system piping shall not be employed.

11.2.17 Auxiliary (nonsolar) heating equipment shall be sized and located to provide the residence with the required water temperature and flow whenever solar energy is inadequate. It shall be compatible with the solar system with regard to such items as output, temperatures, flow volume, and fluid types.

11.2.18 Where air needs to enter the system to allow drainage, a vacuum breaker should be located at the high point of the system.

11.2.19 Piping from the tank to the collectors should be as short as possible and insulated to reduce heat loss. Increase the pipe insulation if the collectors are a long distance from the storage tank.

© UNBS 2009 – All rights reserved

For direct residential systems, use 1.25 cm or 1.9 cm copper pipe. Smaller sizes tend to become constricted by boiler scale when the water contains salts with reversed solubility characteristics. Use 1.9 cm or larger feed and return lines for multiple collector systems containing three or more collectors piped in parallel to prevent unwanted pressure drops between collector connections.

Copper tubing, like all piping materials, expands and contracts with temperature changes (about 37.8 °C in most solar systems). Using expansion loops or offsets can accommodate this expansion. A typical piping run (for a domestic water heater) will increase in length about 1.25 cm when hot. This expansion can be absorbed by a one foot in diameter loop on each run, a U-bend, or an offset of the same length for each run (Figure 11.1). An alternative is to use soft copper tubing in each line. Prevent air traps or low spots in systems when installing expansion loops, and allow for thermal expansion of the pipes.

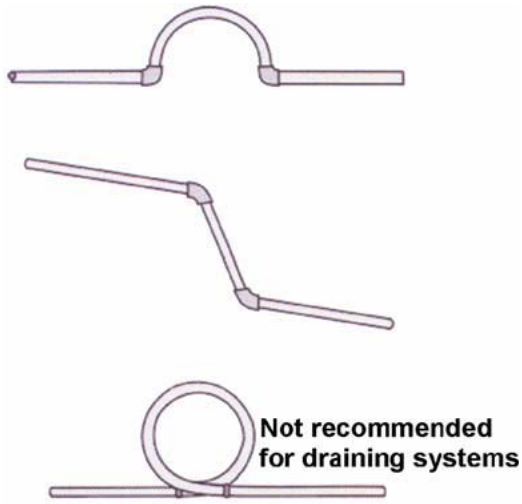

Figure 11.1 – Expansion loops – Systems must be able to drain

The following installation practices should be observed:

1. If possible, utilize an electric-operated (motorized) check valve to prevent back-siphoning. As a second choice, use a vertical spring-check valve with a high temperature (e.g., Teflon, not neoprene) seal. Use of a horizontal swing-check valve is not highly recommended.

2. The solar system must have isolation valves – one on each side of the solar loop. An isolation valve should be provided between the pump and the tank on the feed line and between the check valve and the tank on the return line.

3. Drain valves should be provided on both sides of the collector loop. Drain valves should always be readily accessible. When installed above the check valve it can be used to back flush the collector and when installed below the pump it can be used to drain the pump for service.

4. If a vertical spring-check valve is utilized, the drain valve placed between the check valve and the tank can be used to test the check valve at low pressure to determine if it closes properly. In order to back flush the collector loop, the drain valve must be above the check valve. The location used for the drain valve is based on installer preference.

5. Use only nontoxic heat transfer fluids with single-walled heat exchanger systems. Label the heat exchanger so that it can be identified as a single-walled unit.

6. Thermometer wells on both inlet and outlet sides of the solar loop are desirable.

7. Before leaving the premises, check the flow through the collector loop to make sure there are no major obstructions. Recommended flow rate: about 1/2 gallon per minute (gpm) for each 40 ft^2 of panel area (unless the manufacturer specifies to the contrary).

 © UNBS 2009 – All rights reserved

8. For residential forced circulation systems, use a minimum of 1.25 cm pipe for total runs over 100 feet, or when the flow requirement is greater than one gpm and the pump is less than 1/20 hp, use 1.9 cm pipe. For a thermosiphon system, use of 1.9 cm piping helps eliminate undesirable resistance to fluid flow. If two or more collectors are to be connected in parallel, use 1.9 cm pipe for interconnections.

9. Use 1.25 cm thickness (minimum) rubber type insulation on all piping and make sure the insulation is protected from environmental degradation, especially ultraviolet rays.

10. Minimize piping distances wherever possible.

11. Install all piping with a continuous slope of 0.6 cm for 30 cm toward the drains.

12. Pipe runs should use hangers to maintain their slope and stability. When constructing hangers, use wide plumbing straps. (Do not use wire.) Follow plumbing code requirements for hanger spacing.

13. Install collectors so internal piping will drain itself completely by gravity.

14. Use lead-free solder for soldering system joints and components. Follow local code requirements.

15. If piping requires high points, install air vents at those locations.

11.3 Storage tank installation

11.3.1 General

Because of their size and weight, solar storage tanks must be carefully sited in new installations, and finding suitable locations sometimes challenges the solar contractor's ingenuity on retrofit installations. Since it will eventually require replacement, locate the tank so it can be removed with the least possible effort. Make sure it is placed where a leak will not cause damage, there is adequate working room for making piping connections, and it is protected from detrimental environmental conditions.

New wiring is a job for the electrical contractor, but the solar installer will want to tell the electrician whether a 230 VAC is needed for operating the pump, controller and electric water heater. Amperage information can be found in the installation brochures for the pump and the tank controller.

Configurations for two-tank system piping with electrical backup are shown in Figure 11.2. Gas water heaters should be used with the system shown in Figure 11.3. Gas water heaters do not work well in single-tank solar systems because the gas tank's burner heats the entire tank of stored water from the bottom up. Gas water heaters should be used with passive solar systems which preheat water or with auxiliary solar storage tanks (See Figure 11.3). (By contrast, electric tanks can be configured to heat only the top portion of the stored water.)

The following installation practices should be observed:

1. If possible, provide a separate switch, conveniently located, to turn on and off the hot water heating element(s) on the tank. (This will require a double pole, 230 VAC switch). Also point out to the homeowner the hot water heater circuit breaker switch.

2. If a dual element tank is used for solar storage, disconnect the lower tank element wires at the upper thermostat. Or, turn the bottom thermostat to its lowest setting.

3. Maintain enough clearance to the tank's heating element/thermostat plate(s) so the thermostat setting device can be accessed and the heating element can be replaced.

4. Install a heat trap on the cold-water inlet line and the hot water line to the building, as required.

© UNBS 2009 – All rights reserved

5. Add an insulating blanket to a conventional electric water heater tank (a minimum of 5 to 7.5 cm of fiberglass equivalent is needed). Do not cover the thermostat access doors. To prevent heat loss, set all tanks on 1.3- to 1.9-cm plywood (preferably with a layer of insulation board between the plywood and the floor).

6. Add insulation to the temperature and pressure relief valve and any other tank mounted pipe or fittings. (Don't restrict the pressure temperature relief valve test lever movement.)

7. The solar return on a standard electric water heater should have a dip tube to return heated water approximately 15 cm below the upper element's thermostat.

8. If a standard "mixing" valve is to be installed, be sure it is below the top of the tank. Remove the element when soldering if the valve utilizes soldered fittings. Specific models of "anti-scald" valves can be installed in the piping above the tank.

9. Pressure temperature relief valve piping should be piped to the outside and/or into a suitable drain six inches above ground level. Follow local code requirements.

10. For thermosiphon systems the hot water storage tank should be located at least one foot above the solar panel (except in the case of factory-made unitized systems).

11. Insulate both the hot water fixture line and the cold water supply line at the top of the tank.

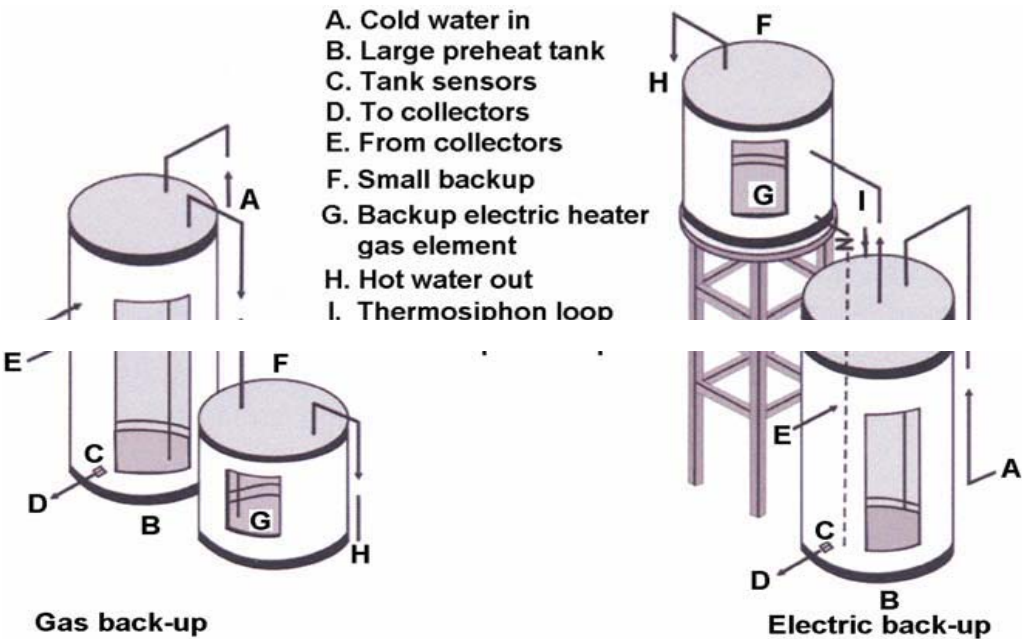

Figure 11.2 – Multiple tank connection

© UNBS 2009 – All rights reserved

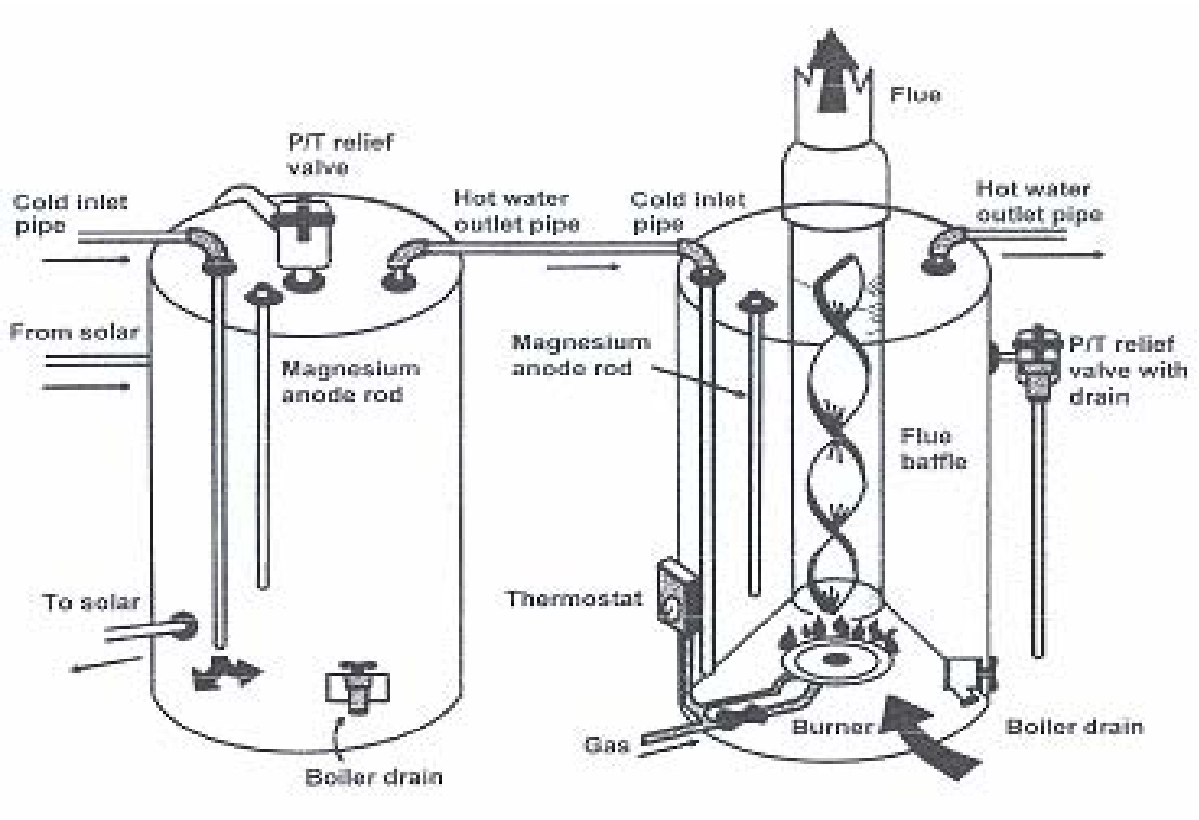

Figure 11.3 – Gas heater connection

11.3.2 Requirements for thermal storage devices

11.3.2.1 Where heat losses may occur, thermal insulation shall be provided on the storage devices and related piping. Insulation shall be suitable for the application, site, and occupancy conditions.

11.3.2.2 Care shall be exercised during the installation of the storage device to prevent damage to the device, lining, and insulation material during handling, mounting or other installation procedures.

11.3.2.3 If liquid storage devices are provided with overflows, the outlets shall be located so that spillage will not damage the premises.

11.3.2.4 Storage devices installed in an attic shall be provided with a drip pan whose outlet is piped to an adequate drain.

11.3.2.5 Fill devices shall be installed with air gaps, backflow preventers, or some method to prevent contamination of potable water supplies as prescribed by applicable codes.

11.4 Pump, blowers and heat exchangers

11.4.1 In many solar water-heating applications, inexpensive, low-horsepower pumps will circulate enough liquid through the heat collectors for efficient operation. When the entire circulation loop of a collector system is full of liquid, as is the case with most pressurized systems, only the friction resistance of the piping and valves must be overcome.

11.4.2 Drain-back systems must use higher head pumps to lift the water (overcome the static head) between the storage water level and the highest point in the system. That same pump must have enough reserve pressure capacity to overcome the friction head. Fortunately, the friction head is usually very low when compared to the static head.

© UNBS 2009 – All rights reserved

11.4.3 The location of the pump is also important in a drain-back system. Since most solar pumps are not self-priming, the impellers must be below liquid level at all times. Pumps may be mounted in any orientation unless the position prevents air from escaping from the volute (pump cavity). Pump rotation must push the fluid in the right direction. Some pump motors may require lubrication, and the homeowner should be shown how and when to lubricate the pump motor.

11.4.4 Pumps and blowers shall be installed in accordance with the manufacturer's instructions and so that the flow is in the proper direction.

11.4.5 Pumps and blowers should be installed with consideration to access for maintenance.

11.4.6 Pumps and blowers shall be installed to allow sufficient air circulation to prevent motor overheating.

11.4.7 Pumps and heat exchangers shall be adequately supported for their mass and to minimize vibration. Minimize noise and vibration by mounting the base solidly or allowing the pump to be supported by its mounting flanges from a secured section of pipe. All pumps and motors must be UL-listed.

11.4.8 Heat exchangers shall be installed in accordance with the manufacturer's instructions.

11.4.9 Materials of construction used in pumps and heat exchangers should be compatible with other SDHW system components and the heat transfer fluid.

11.5 Controls, sensors and safety devices

11.5.1 Controls and safety devices shall be selected and installed in a manner that, in the event of a failure of any system component, such failure will not result in serious damage to the rest of the system or any part thereof. Installation shall be in accordance with the manufacturers' instructions and applicable building code requirements.

11.5.2 Differential controller

The differential controller is usually boxed and mounted inside the building to protect it from the weather and tampering. It often is connected directly to the pump with preformed conduit and equipped with 230 VAC wire and a wall plug.

The low-temperature sensor of the differential control is usually attached near the bottom of the storage tank.

The high-temperature sensor may be placed:

1. On the outlet pipe of the solar collector.
2. In the air space between the collector absorber and the transparent cover.
3. Against the absorber surface.

Follow the instructions from the controller manufacturers. In any one of the three sensor locations, the basic on-off modes are the same. When the collector sensor senses temperatures 5-20 °C hotter than the tank sensor, the pump is turned on. When that difference is reduced to about 3 °C, the pump is turned off.

This method of controlling the pump's operation guarantees water circulates through the collectors only when such circulation will result in an energy gain to the storage tank.

There is no guarantee water returning to the tank will be hotter than the water stratified at the top of the tank; therefore, solar tanks introduce the returning water about one-third of the way down the side of the tank. This is done with a sideported tank or with a short dip tube, as shown in Figure 11.4.

 © UNBS 2009 – All rights reserved

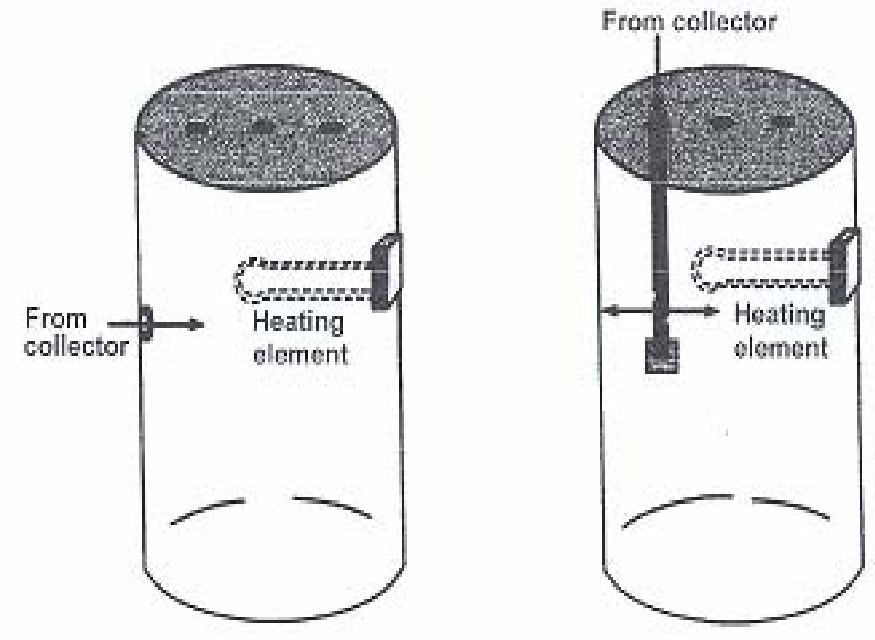

Figure 11.4- Side port and "dip tube" arrangement of collector return port

The following installation practices should be observed:

1. The tank sensor should be located on the storage tank as close as possible to the bottom. If the tank is not accessible, it should be located on the collector supply pipe as close as possible to the tank outlet. All sensors should be insulated from the surrounding air.

2. Perform a controller checkout procedure before leaving to be sure collector and tank sensors are calibrated. This procedure should utilize a digital ohm meter and/or a controller tester.

3. Check all freeze sensors before installation. This can be done by placing them in an ice water bath. They must activate the pump or freeze control strategy above 0 °C (usually 3 – 5.6 °C).

4. For adequate freeze protection, use at least two methods of freeze protection. Connect the collector sensor and freeze sensor in parallel if the freeze sensor closes on temperature fall, series if it opens on temperature fall. (The sensors must be used with a controller that responds to a closing or opening freeze signal as required).

5. A collector sensor mounted on piping should be well covered with insulation and thermally in contact with the piping.

6. All sensors must be mounted according to manufacturer's specifications.

7. Connections for sensors should be made with silicone-filled wire nuts or telephone style waterproof connections. They should be coated weather tight with sealant and protected from exposure to sunlight.

8. Use Teflon (or other high-temperature insulation) insulated wire within or close to the solar collector.

9. Do not run low voltage sensor lines near higher voltage 230 VAC lines. The controller may be affected by induced voltage fluctuations. When running sensor wiring in the attic, secure it at regular intervals overhead, stringing it from one rafter to the next or along piping insulation to prevent potential damage by people moving about or storing objects in the attic. Near the tank, run sensor wiring along piping insulation and tape it in place. Do not leave any wire dangling anywhere.

© UNBS 2009 – All rights reserved

10. Do not stretch sensor wires taut before securing them to supports. Thermal expansion and contraction may cause premature failure of the circuit because of damaged insulation and the resulting short circuits.

11. Check completed circuits for unwanted grounding. Some controller sensor's circuits contain one grounded leg. Observe proper polarity in such cases.

12. It is recommended that 24 VDC or less be used for all sensor circuits. If 230 VAC circuits must be used, follow local electrical codes.

11.5.3 Timer controller

1. Use a certified timer incorporating battery back-up capability.

2. Provide the homeowner with the timer instruction booklet. This will become very important during battery changes and if the homeowner ever has to reset the timer.

11.5.4 Photovoltaic controller

1. Follow the photovoltaic manufacturer's recommendations for gauge size of wiring.

2. Follow the differential controller wiring guidelines regarding securing wiring runs and stretching of wiring.

3. The photovoltaic module should be covered before the DC pump is connected to avoid an electrical spike to the motor.

11.5.5 Where systems are designed to drain out automatically, the automatic drain valves shall be piped to a suitable drain.

11.5.6 Adequately sized pressure relief or temperature and pressure relief devices shall be provided in those parts of the solar system that can be isolated and contain a heat source (see 17.2).

11.5.7 Devices (for example, dampers) shall be installed to prevent cold air from freezing any air to water heat exchanger. Care should be taken during installation to ensure a positive air seal.

11.5.8 Expansion tanks shall be provided as part of the SDHW system to provide for thermal expansion of heat transfer liquids in closed loops. Expansion tanks shall be sized for the expected operating and stagnation temperature and pressure ranges and the type of heat transfer fluid.

11.5.9 Control circuit wiring and terminals should be identified so that wires are readily traceable.

11.5.10 Isolation valves should be provided so that the major components of SDHW systems can be maintained or serviced. If collectors can be isolated, they shall be protected by a pressure relief valve.

11.5.11 Check valves may be used to prevent flow in the opposite direction within the solar energy system. They shall be installed according to manufacturer's directions and never in place of backflow preventers.

11.5.12 Controls, sensors, dampers, and valves should be marked to identify their function. Any control that serves as an emergency shutdown device shall be so indicated by conspicuous and permanent labels.

11.5.13 Systems should include means by which the owner can be alerted that a portion of the system or the entire system has ceased to function and that repairs are necessary (for example, pump pilot lights, thermometers, flow indicators, etc.).

11.6 Freeze protection

11.6.1 SDHW systems installed in climates where freezing can occur shall be protected.

 © UNBS 2009 – All rights reserved

11.6.1.1 Antifreeze chemicals

Freeze protection may be accomplished through the use of chemicals either as or in the heat transfer fluid.

11.6.1.2 Automatic draining

Freeze protection may be accomplished through the use of system controls which automatically allow heat transfer fluids to drain from parts of the system exposed to freezing temperatures, as in the draindown or drainback systems. Electrically operated valves shall drain the system when there is a power outage (that is, fail safe).

11.6.1.3 Automatic recirculation

Freeze protection may be accomplished through the use of system controls which automatically circulates heat transfer fluids through the system when outdoor temperatures reach predetermined levels. This freeze protection does not operate during periods of power outage unless an auxiliary source of power is provided. This freeze protection system is not recommended for use in areas with frequent or severe freeze conditions, and may increase the heat loss of the system during off periods.

11.6.1.4 Manual draining

Freeze protection may be accomplished through the use of system controls which allow an operator to manually drain the system of heat transfer fluids. Caution should be exercised when depending on this method of freeze protection since it requires human attention for proper operation. Failure to operate the system properly may result in considerable damage.

11.6.1.5 Low wattage electric resistance heating

Freeze protection for tank absorber systems may be accomplished through the use of low wattage (less than 300 W) electrical resistance heaters and system controls that supply heat to the tank and adjacent piping/fittings only when temperatures inside the system reach 2 + 1 °C. This freeze protection system does not operate during periods of power outage unless an auxiliary source power is provided.

11.6.1.6 Freeze tolerant materials

Freeze protection may be accomplished through the use of materials which are not damaged by repeated cycles of freezing and thawing while filled with potable water, provided evidence that the material can withstand such cycling is supplied.

11.7 Heat transfer fluids

11.7.1 Heat transfer fluids shall be added and maintained in accordance with the manufacturers' instructions.

11.7.2 Toxic heat transfer fluids shall be separated from the potable water supply by means of a double walled heat exchanger or equivalent protection (see 17.3).

11.7.3 Heat transfer fluids shall be selected for normal operating temperatures, as well as maximum (no-flow) and minimum temperatures.

11.7.4 Heat transfer fluids should not accelerate corrosion. Similar metals, corrosion inhibitors, inert fluids, or sacrificial anodes should be used.

11.7.5 Heat transfer fluids shall be disposed of in a manner acceptable to local health authorities.

© UNBS 2009 – All rights reserved

12 System installation checkout and start-up procedures

12.1 General

12.1.1 This clause presents recommended steps for checking out and starting up a newly installed solar water heating system. In most cases, the manufacturer of the system will have included specific instructions. If the following recommendations differ, follow the manufacturer's instructions. The general steps for activation and start-up include pressure testing and flushing the system, testing the operation of individual components, cleaning up the work area, and instructing the owner on system operation and maintenance.

12.1.2 After the system has been installed, it shall be tested in all modes of operation to the extent practical to ensure that it is functioning properly.

12.2 Pressure testing

Direct systems should be pressurized to the maximum pressure they will encounter plus the safety factor specified by any local codes. Indirect systems should be pressurized to their design pressure. Use a charging or testing kit that includes a tank of compressed gas, charging fittings, charging liquid and a pressure gauge. Some indirect systems require pressurization and testing with a liquid other than water. Follow the manufacturer's recommended procedure.

When the system is full of liquid and pressurized, check for any leaks. Check the collector, joints and valve stem seals. If any leaks are detected, correct them and then retest before applying insulation over those areas.

12.3 Flushing the system

12.3.1 All liquid loops of a SDHW system shall be flushed and leak tested. If hydrostatically tested, pressurized systems shall be isolated and tested at the maximum working pressure of its lowest rated component as specified by the manufacturer. If air tested, the maximum test pressure shall not exceed 40 psig (275 kPa). Care should be exercised to purge completely fluids used in flushing. During flushing of the system, the collectors may be disconnected or by-passed to prevent the passage of debris through the collector.

An important factor to note after flushing and checking the collector loop with water is that some heat-transfer fluids, such as silicone and synthetic oils, must not be mixed with water. Ensure that all water has been removed from the system piping and that the piping is dry before adding the oils. Blowing dry compressed air through the system for a time can do this. Most glycols can be mixed with water, thereby, the system piping does not have to be dry before introducing the glycols.

Isolate and flush the collector loop, preferably in the reverse direction of normal flow. If the check valve is located on the collector supply, use the cold-water service pressure to back flush the collector return. If the check valve is located below the collector return hose bib drain, use a garden hose with a double female adaptor connected to both an outside faucet and the collector return drain.

In both cases, force water out the collector supply drain through an attached hose leading to a point of safe discharge. Check this water for dirt, scale or other signs of blockage. Stop when the discharge no longer contains any debris.

Except in the case of drain-back systems, it is important that all air be vented out of the collection loop; otherwise, it may accumulate in a column of sufficient height to stop or seriously impede circulation. The air vent at the high point in the piping is installed for this purpose. When water reaches the air vent, the vent should close quickly, without leaking. Many vent valves have a stem that can be depressed to allow fluid to escape, flushing the valve seat clean.

12.3.2 All air loops of a SDHW system should be examined to confirm compliance with 11.2.13.

 © UNBS 2009 – All rights reserved

Manual air vents should be used to purge air from the collector indirect systems using glycol or oil heat transfer solutions. Once the air has been purged, the air vent should be sealed tightly to prevent loss of fluid or fluid vapors.

12.4 Testing the pump and controls

1. Check the operation of the pump. Confirm it is plugged in or wired correctly and power is available. If the system's controller has an on/off automatic switch, manually place the switch "on" to activate the pump. In systems so equipped, an LED will signal if the pump is on. In systems without such an indicator, check for other signs of pump operation, as an audible hum, motor fan rotation, slight vibration, or temperature differences in the feed and return piping.

a). *Sunny day*. On a sunny day, the pump should run most of the time. If the system has a differential or direct PV controller, passing clouds may cause the pump to cycle on and off occasionally.

b). *Cloudy day*. On a heavily overcast day or at night, the pump should not run. To determine if a pump powered by 230V residential power is working, unplug it from the controller and plug it directly into a wall outlet. If the pump does not have its own plug, direct wire the pump to power (bypassing the controller and/or switches).

CAUTION: Do not attempt this procedure if you are not familiar with safe electrical practices.

It is generally easier and safer to "fool" the controller into turning on the pump. See item 3c, Differential controller test.

2. Check for flow in the collector loop. If there is a flow meter or indicator in the collector loop, determine if fluid is actually moving. If the system has no flow indicator, use the following methods:

a). *Sunny day*. If it is a sunny day and the pump is running, pull back a portion of the insulation on both the collector supply and return pipes (at points a few feet from the tank). Carefully feel (or measure with a thermometer) the pipe to make sure that the return line from the collector is hotter than the supply line going to the collector. On a sunny day, such a temperature difference (usually 5-15°F) indicates fluid is flowing in the collector loop.

If you cannot detect a temperature difference, turn the pump off by disconnecting its power supply. Leave the pump off for a few minutes - long enough for the fluid in the collector to heat up. Then restart the pump and feel the pipes again. Within several seconds, you should feel the hotter fluid from the collector pass through the collector return line into the tank. If you do not feel this surge of hot fluid on a sunny day, there is probably some blockage in the collector, the pump, the valves or the pipes.

b). *Cloudy day or at night*. On a very cloudy day or at night, you can still use the above procedure to check for flow in the collector loop. However, make sure the pump has been off for a long time, so the fluid in the collector is relatively cool. Then, when you turn on the pump again, you should feel a surge of cool fluid pass from the collector into the tank. Note that this method works best on colder nights.

To determine the actual flow rate through the solar collectors, use a flow meter or one of the methods discussed in Annex N.

3. Test control system operation. Conduct the following tests to check the control system.

WARNING! For any procedure involving electrical equipment, always turn off or disconnect t he unit from the power supply before making any adjustments or resistance measurements.

a). ***Detailed controller test.*** A complete method of checking the controller involves the use of a differential controller test set. Containing fixed and/or variable resistances, the test set is generally calibrated for a specific manufacturer's line of controllers, though it can be adapted to test other brands of controllers. Instructions for its use are usually supplied with the tester.

© UNBS 2009 – All rights reserved

The test set enables you to determine the exact "turn-on" and "turn-off temperatures of the controller. Compare these differential temperatures to the manufacturer's specifications. If the measured temperatures do not match the specifications, and if the setting is adjustable, you can change the setting to match the manufacturer's recommendations,

b). ***Sensor test***. To check the temperature sensors of a differential controller, measure their resistance. Disconnect the sensors from the controller terminals or lead wires and use a volt-ohmmeter to measure the resistance across the sensor wires. (See Annex M.) For thermostats and metal film sensors, compare their resistance to the manufacturer's temperature-versus-resistance specifications.

Table 12.1 – Temperature and thermistor resistance

Temperature (^{o}F)	3000-Ω Thermistor	10,000-Ω Thermistor	Temperature (^{o}F)	3000-Ω Thermistor	10000-Ω Thermistor
Thermistor open	Infinite	Infinite	92	2100	7000
Thermistor shorted	0	0	94	2010	6683
30	10400		96	1920	6383
32	9790	32660	98	1830	6098
34	9260	30864	100	1750	5827
36	8700	29179	102	1670	5570
38	8280	27597	104	1600	5326
40	7830	26109	106	1530	5094
42	7410	24712	108	1460	4873
44	7020	23399	110	1400	4663
46	6650	22163	112	1340	4464
48	6300	21000	114	1280	4274
50	5970	19906	116	1230	4094
52	5660	18876	118	1180	3922
54	5370	17905	120	1130	3758
56	5100	16990	124	1040	3453
58	4840	16128	128	953	3177
60	4590	15315	132	877	2925
62	4360	14548	136	809	2697
64	4150	13823	140	748	2488
66	3940	13140	144	689	2298
68	3750	12494	148	637	2124
70	3570	11885	152	589	1966
72	3390	11308	156	546	1820
74	3230	10764	160	506	1688
76	3080	10248	165	461	1537
77	3000	10000	170	420	1402
78	2930	9760	175	383	1280
80	2790	9299	180	351	1170
82	2660	8862	185	321	1071
84	2530	8449	190	294	982
86	2420	8057	195	270	901
88	2310	7685	200	248	828
90	2200	7333	210	210	702

Generally, differential controllers now have 10000 ohm thermistor sensors or an RTD. In the past, 3000 ohm sensors were more prevalent. Sensor resistance should match the measured temperature as closely as possible, as shown in Table 1. Refer to the manufacturer's installation guide for specific instructions and specifications.

For example, the table shows that when the environment temperature is 25 °C, the 3000 ohm sensor should read 3000 ohms, and the 10,000 ohm sensor should read 10000 ohms. As the temperature

© UNBS 2009 – All rights reserved

increases, the resistance decreases. At 32.2 °C, a 3000 ohm sensor reads 2200 ohms and a 10000 ohm sensor reads 7333 ohms.

The general range of solar system temperatures is 21.1 — 60 °C for the tank sensor and 100- 150°F for the collector sensor, depending on the time and conditions of day. If an "open" or "short" condition is indicated, check the wiring between the controller and sensor.

A common cause for an "open" condition is a broken connection between the wiring and the sensor. A "short" may be caused by a piece of metal pinching the sensor wire and conducting it to ground.

For temperature-actuated switches, such as freeze sensors and upper limit sensors, you can also check the switch position with a volt-ohmmeter. The switch is either normally open or normally closed and changes position at a particular temperature. Check the freeze sensor by placing it in ice water and determining that the switch changes position.

c. Differential controller test. Follow the manufacturer's checkout procedures if they are provided. However, if the procedure is unavailable, follow these steps to check differential controllers with thermistor sensors that have a negative temperature coefficient in which resistance decreases as the temperature increases.

   i. Disconnect and separate all sensor inputs. Identify the sensor wires for proper reconnection.

   ii. With the controller in its normal operation or automatic switch position, short the collector sensor input wires or terminals together. This simulates a very hot collector. The control should turn on (indicated by the LED and/or pump operation).

   iii. Remove the short and the control should turn off. Be aware that some controllers may utilize a time delay circuit to keep the pump from cycling on and off too often.

   iv. The controller is (probably) in good condition if it responds correctly to these steps. Test the temperature sensors next before proceeding to a more detailed test of the controller.

   For the differential controllers that use resistance temperature devices (RTDs), which are positive temperature coefficient sensors, the tank sensor input should be shorted in Steps iii and iv above. Shorting the collector sensor indicates a low temperature, and the pump should stay off. Shorting the tank should turn the pump on. If freeze protection and the collector sensor functions are combined, shorting the collector terminals simulates a freeze condition. The pump should again turn on. Use a volt-ohmmeter to ensure that temperature matches resistance as shown in Table 2.

d. Photovoltaic (PV) controller test. Use the following procedure to check the voltage and current output of the photovoltaic module on a sunny day:

   i. Disconnect the pump from the wires coming from the PV module or pump starter box.

   ii. With a volt-ohmmeter, check the voltage between the positive and negative terminals of the PV module. Given almost any amount of sunlight, this open-circuit voltage should be between 14 and 22 volts.

   You should also check the PV modules short-circuit current with a volt-ohmmeter that has milliamp measurement capability. Under sunny conditions, the short-circuit current should be between 200 and 1000 milliamps, depending on the voltage rating of the PV module.

   If there is no amperage at good sun conditions, the PV module or the connecting wiring may be defective. In this case, check the amperage of the module at its roof location to eliminate the effect of connecting wiring.

© UNBS 2009 – All rights reserved

Table 12.2 – Temperature and RTD resistance

Temperature (^oF)	Resistance	Temperature (^oF)	Resistance
30	861.8	35	876.1
40	890.5	45	905.1
50	919.2	55	933.9
60	948.7	65	963.7
70	978.2	75	993.4
80	1008.7	85	1024.0
90	1039.0	95	1054.6
100	1070.3	10	1086.1
110	1101.5	115	1117.5
120	1133.6	125	1149.9
130	1165.6	135	1182.1
140	1198.7	145	1215.4
150	1231.5	155	1248.4
160	1265.4	165	1282.5
170	1299.1	175	1316.5
180	1333.9	185	1351.4
190	1368.5	195	1386.2
200	1404.1	205	1422.0
210	1439.5	215	1457.7

iii. To check the DC-powered pump, use a 12-volt power supply or two 6-volt lantern batteries connected in series (12V). Disconnect the PV panel from the pump and connect the pump to the proper terminals of the batteries. If the pump does not operate off the batteries, the pump is defective. If the pump does run off the batteries, the PV module or connecting wire is defective.

e. Check valve test. Use the hose bib drains and service water pressure to check these two valves: a horizontal swing check valve or a vertical in-line ring check valve.

Send water against the normal flow direction. Water flowing past the valve indicates a faulty seat or stuck hinge that will not seal under the low back flow of unwanted thermosiphoning.

Check a solenoid-actuated or motorized ball valve by using the manual lever (if it is present) to open and close the valve while checking for flow. Some motorized valves are not designed to close off against municipal water pressure.

After you have tested these valves, verify their normal operation by listening to and watching the valve open and close as the pump turns on and off. Check valves are prone to problems from sedimentation build-up, so they should be inspected periodically.

If the check valve cannot be tested by the above back flow procedure and it is suspected it might cause night-time thermosiphoning, examine the system at night. When the fluid in the collector has cooled to a temperature sufficiently below that of the fluid in the tank, feel the collector supply and return pipes a few feet from the heat of the tank. If one pipe is warm, the check valve might not be sealing.

Sometimes a leaking check valve can cause the differential control to cycle the pump at night. To confirm this speculation, unplug the pump from the differential controller and plug a clock into the controller instead. Note the clock's time. Note the time again the next morning before the solar system would normally start. If the clock has advanced because the controller supplied power to it, the check valve is not sealing and needs to be replaced.

f. Mixing valve test. To check a mixing valve, feel or measure the temperature of the service hot water at the closest hot water faucet. As you measure, adjust the mixing valve over its range of motion, moving it to the desired temperature setting. These valves may stick open or closed after prolonged use, in which case they must be repaired, replaced or eliminated.

 © UNBS 2009 – All rights reserved

12.5 Cleaning up

Collect and remove all tools. Dispose of any debris created during the installation. Make sure arrangements have been made to repair any damage that may have occurred during installation (such as broken roof tiles). Ask the owner to look things over and approve the installation and clean up.

12.6 Homeowner's manual and instructions

12.6.1 Written operating instructions for the SDHW system shall be given to the owner for retention.

12.6.2 Complete operating instructions, including sequence of operation, wiring diagrams, and flow diagrams, shall be provided with the SDHW system. Installers shall provide written instructions to the building occupant for proper operating, safety, and emergency shutdown procedures of the devices.

Carefully instruct the owner on the operation of the solar water heater. This reduces "false alarm" callbacks and enables the owner to make minor adjustments. With active systems, the owner should understand the pump and "pump operating" indicator on the control system.

12.6.3 Where hazardous fluids are used in the system, suitable warning labels shall be permanently mounted in a conspicuous place, with instructions for emergency treatment.

12.6.4 The owner shall be provided with written instructions for routine required maintenance, including operations that should be performed by service personnel. Instructions shall include collector glazing cleaning (see 6.10.7), draining and refilling, air venting of liquid systems, cleaning of components, corrosion control, and other maintenance procedures, in the system's operating instructions.

12.6.5 A periodic maintenance program is recommended.

12.6.6 Service check lists and logs should be provided with system operating instructions.

12.6.7 Periodic cleaning of the collector glazing may be needed to maintain optimum efficiency. Operating instructions should recommend the proper cleaning agents and methods of cleaning that are compatible with collectors.

12.6.8 Valves should be checked periodically for proper operation.

12.6.9 Periodic inspection of the storage tank pan drains should be made to ensure their ability to drain adequately when needed.

Carefully explain any freeze protection devices. Demonstrate the steps for manually draining the collectors and piping, if that is a freeze protection mechanism for the system. Also, show them how to reactivate the system.

12.6.10 Devices such as pumps, valves, and controls should be accessible for repair and maintenance.

12.6.11 Show the owner how the back-up electric element may be turned off during warm months. Explain that the system should provide some hot water on its own. If the system shortly runs out of hot water, consider if it could have been subjected to a temporary abnormal load or lack of sunshine. Otherwise, it may need service.

12.6.12 Demonstrate how to isolate the storage tank from the collector loop. Then show the owner how to drain several gallons of water from the tank to remove built-up sedimentation. Instruct the owner to follow this procedure at least annually. Advise the owner that hot water use patterns can affect system efficiency. Let them know the system will provide the hottest water during late afternoon and early evening. Suggest they adjust their hot water use to accommodate the solar cycle.

12.6.13 Affix the name and contact information of the installing firm and installation mechanic to the tank or controller so the homeowner can contact the right people quickly if service is required. If possible, make arrangements with the owner for periodic professional inspection and maintenance of the system. Make sure

© UNBS 2009 – All rights reserved

that the owner has a copy of the system manual and that the manual is kept in an accessible location for future reference.

13 Commissioning and documentation

13.1 Filling the system

With direct systems, and with indirect systems where water is the heat transfer fluid, all new work, and also the existing system, as necessary, should be thoroughly flushed out with water, pressurized if necessary, and suitably isolated from the mains to prevent back siphonage.

Indirect systems using non-aqueous and certain aqueous based heat transfer fluids have to be flushed out in accordance with the fluid manufacturer’s instructions. This stage of commissioning may afford an early opportunity to check that all unions and glands are watertight and free of weeps. However, some liquids are more searching than water and, particularly in systems where a circulating pump is employed, the circuits will require a second inspection when finally filled and with the pump operating.

The installer should ensure that all non-return valves and the pump are connected the right way round (usually indicated by an arrow) for the direction of flow, and that non-return valves and motorized or solenoid valves are operative.

The system should then be drained and refilled with the final charge of fluid, preferably when the collector is cold rather than hot.

It is important to ensure that air pockets are removed from sealed and vented systems, and special attention should be given to this at the time of commissioning. The design of the system should allow for subsequent automatic release of air.

13.2 Drain-down systems

Solar heating systems that are susceptible to freezing may be expected to incorporate in their design a frost sensing device that will monitor either freezing conditions at the collector, or the ambient temperature adjacent to the array, or both.

Frost control devices can be of a simple 'yes/no' logic or they can monitor the differential temperature irrespective of ambient temperature and drain the system when no temperature differential exists between the collectors and the preheat vessel.

Where drainback systems are employed, it is recommended that provision is made for the installer to test that the installation is operating correctly by the provision of a test button facility. Where no such provision is made, the manufacturer should provide instructions for overriding the control so that the arrangements for drainback may be tested.

13.3 Electrical and auxiliary equipment

Pumps of a lower wattage than domestic central heating pumps are available for solar heating installations. However, special attention to pump selection will be needed when non-aqueous fluids are used. The pump's setting will have to be made to suit the flow rate required. The installer should ensure that the pump is vented of air and that it operates quietly. If a flow meter is fitted to the circuit, the pump flow control should be adjusted to give the design flow rate.

Differential temperature controllers may be preset at a suitable differential at the factory, or they may require setting and testing on site in accordance with the manufacturer's instructions.

Correct functioning of all indicator lights and other electrical devices should be confirmed. Correct functioning of temperature indicators (if fitted) should be confirmed when the system is first filled and, if possible, at a later date when the system is hot.

 © UNBS 2009 – All rights reserved

The manufacturer's instructions should also be followed for any frost protection equipment installed.

13.4 Thermal insulation for the system

It is recommended that all testing and inspection of the system is conducted before the system connections are thermally insulated in order to ensure that these are not weeping.

13.5 Making good

Before an installation can be regarded as being satisfactorily completed, the installer has to ensure that all damage to the structure caused by the fitting of pipes, tanks, mounting brackets, etc. is restored and made good.

Particular attention should be paid to repairing and sealing any damage to the roof lining, resulting from the installation of fixing brackets and pipes, etc. passing through the roof cover. Damage to guttering, walls, garden and lawn by ladders, scaffolding, hoists, etc. should also be made good.

13.6 Start-up and handing over

Once the installer has completed the installation, depending upon the time of year and on the instructions of the client, the system may be either switched on and left operating, or left in a safe condition for later handing-over.

In either event the installer should present an appropriate document to the client, certifying that the system has been installed and commissioned satisfactorily.

At handing-over, the client should be supplied with a user's information envelope, containing the following:

a) The handing-over document described in paragraph 2 of 10.6.

b) Descriptive literature, prepared by the designer, relating to the operational principle of the system, and giving technical data on the main system components. This information may be provided on a data sheet, and a suggested format providing the minimum information is given in 10.7.

c) Warranties or guarantees issued by the manufacturers of the components, or by the installer.

d) A set of operating instructions, describing start-up, normal running and shut-down procedures in a form readily intelligible to the non-technical user. These should also include details of protection provided against overheating and frost.

e) A schematic diagram of the system and a circuit diagram of the electrical controls. A warning should be given against tampering with any of the electrical controls or other equipment.

f) A user's data sheet (see 10.7).

g) Details should be provided of any equipment that has been fitted to check system operation. The purpose of all indicator lights should be clearly explained. If a flow meter is fitted, the design flow rate (and permissible variations) should be stated. Information should be given on the expected normal behaviour of instruments and on how they may be used to detect incorrect system operation. Details of action to be taken in the event of apparent faults should be provided. If special additives are used in the heat transfer liquid, durable identifying labels providing the necessary information as to the formulation, solution strength, and specific hazards, source of supply and expected life of the liquid should be attached to the appropriate system components in a conspicuous manner for future reference. A separate label should also record the date of the installation and the name and address of the installer.

© UNBS 2009 – All rights reserved

13.7 Recommended form of user's data sheet

System description

Instrumentation provided for checking system operation …….

Circuit design
*Direct system/Indirect system

Heat transfer fluid in collector circuit
*Water and inhibitors/water and antifreeze/mains supply water/non-aqueous/other
Manufacturer's recommended replacement fluid…….

Method of circulation
*Pumped (pump rating …….W)/ thermosiphon

Means of accommodating fluid expansion
*Feed and expansion cistern/pressurized accumulator/other…….

Means of accommodating 'no-load' condition in summer weather
*Drainback/special fluid/pressurized system/other …….

Method of frost protection
*Antifreeze/special fluid/drainback/other……..

Method of system control
*Differential temperature controller/time clock/other…….

*Other controlled functions……..m^2

System performance

Aperture area of collector …….m^2

Collector inclination to horizontal …….degrees

Collector orientation ……..... degrees east/west of south

Collector performance classification in accordance with BS 5918 *B/C/D/E/F[1]

Design hot water demand……./day Preheat storage tank volume……...
Combined preheat/hot cylinder volume …….

Design hot water delivery temperature ……..°C

Estimated annual solar energy supplied……. (MJ per year)

Maintenance

Recommended frequency for heat transfer fluid inspection ……..

Recommended frequency for heat transfer fluid replacement …….

Other servicing requirements …….

 © UNBS 2009 – All rights reserved

13.8 Post-commissioning checks (see also Clause 16 (a) and (b))

Depending on the terms of contract agreed, a post-commissioning visit within a few weeks may be included in the supply and fixing cost, or it may form part of a maintenance contract, or be by arrangement with the installer. It is recommended that at least the following checks should be made:

a) that all unions and glands are free of weeps;

b) that the glazing seals are weathertight and sound;

c) that all air has been expelled from the collector circuit;

d) that the levels in cisterns are correct or that sealed systems are at the correct pressure and volume;

e) that electrical controls and warning indicators are operating correctly, according to the manufacturer's test instructions;

f) that the circulating pump (if fitted) is operating without undue noise;

g) that all insulation is firmly attached;

h) that all cistern covers are properly in place,

i) that no condensation or damp spots are apparent, particularly around the pipes and fixings in the roof space;

j) that roof fixings are firm, and that the roof covering is free from cracks and abrasions beneath the collectors;

k) that the weathering is properly protecting the structure.

A suitable check list should be provided by the supplier for the inspection, and it should be signed and dated by the person making the inspection. A copy should be left with the client.

14 Problem assessment and system checkout

14.1 Problem assessment

To diagnose system problems, you must not only understand the system type and its components and how they work, but you must also know what questions to ask to determine the problem and find out when and why it occurred. The more experience you have servicing solar systems, the more you will learn what questions to ask the customer.

14.2 The initial service call

When you first receive a service call, record the caller's name, address and telephone number and be sure to get directions to the service location. Also, verify the caller is the system owner and is authorized to have you service the system.

Determine what kind of service the caller is requesting. Is it a routine service call or is the system not working properly? If the system is not working, what exactly is wrong? Is there no hot water? Is the system leaking? If it is leaking, where is the leak — on the roof or at the storage tank? The more you know about the system, the better prepared you will be when you arrive at the site. For example, if the system has an expansion tank and the system is over two years old, you will want to take new glycol with you to replace the old glycol. If the system has a drainback tank, you will want to have distilled water with you.

© UNBS 2009 – All rights reserved

Avoid any misunderstanding by making your payment policy clear at the outset. For example, if the caller is renting the home, clarify whether or not you expect to be paid at the time service is rendered.

Find out the type of system, who installed it, how old it is and what previous service has been performed. Also, find out if the caller has a manual, a schematic, and a parts list for the system and what, if any, service contracts, warranties and insurance policies cover the system or its components.

14.3 System records

All collectors and systems sold or marketed shall be certified. As part of the certification requirements, each system must include a homeowner's manual that lists system components and describes the system design, operation and maintenance requirements. In addition to the manual, each system should have a freeze protection information label displayed at a prominent location on the system — on the storage tank, heat exchanger or controller. This label describes the system's freeze protection mechanism and any actions the homeowner must take when freezing occurs.

14.4 Warranty coverage

Find out if the system or its components are covered by warranties. Typically, the term of the collector warranty will be from 5 to 20 years, with other components varying from 90 days to 5 years. It is also important to know whether the warranties are full or limited. This designation is required to appear on the warranty document. A full warranty is required by law to provide the following:

- A defective product will be fixed (or replaced) free, including removal and reinstallation if necessary.
- The product will be fixed within a reasonable time after the customer complains.
- The customer will not have to do anything unreasonable to get warranty service (such as shipping components back to the factory).
- The warranty is good for anyone who owns the product during the warranty period.
- If the product cannot be fixed (or has not been after a reasonable effort to do so), the customer may choose to receive a new product or a refund.

Limited warranties provide less protection than the full warranty. For example, a limited warranty may:

- Cover only parts, not labor
- Allow only a prorated refund on credit
- Require the customer to return the product to the manufacturer for service
- Cover only the original buyer
- Charge for handling the service order

Be aware, too, that some companies include a provision that unauthorized service may void their warranties. In these cases, be sure to contact the manufacturer for approval. If you provide unauthorized service, you may be held liable and be forced to take over that warranty.

Typically, a solar water heating system has a system or installation warranty separate from the individual component manufacturer warranties. Be prepared to explain this to the customer if necessary. Some service problems that arise during the warranty period may not be covered by the warranty for the item in need of repair or replacement. For example, if a component fails because of faulty installation rather than a product defect, the manufacturer of the product may not be required to repair the component. In this case, the contractor's system warranty, if still in force, should cover the cost to repair the problem.

 © UNBS 2009 – All rights reserved

Another potential gap in warranty coverage falls in the area of freeze damage. Some collector warranties will specifically exclude damage as a result of freezing. In addition, the freeze protection component will typically exclude coverage of incidental damages. If the freeze protection device fails, causing damage to the collector, this exclusion normally relieves the manufacturer of the component of liability for repair or replacement of the collector. The customer can usually seek recourse from the homeowner's policy to recover these costs.

If the customer has warranties that appear to be in force, but the company is no longer in business, all hope is not necessarily lost. If the system was financed, the finance company may be liable for all warranty claims as a "holder in due course." A review of the instalment sales contract will usually specify what rights the customer may have in this regard.

Even when the warranty is no longer in force, some contractors replace components at no cost as a goodwill gesture toward the customer. But they are not obligated to absorb this expense. Ask about warranties at the outset so neither you or the customer is surprised when you prepare the repair estimate.

14.5 Service history

Many contractors offer service contracts to their customers, providing either the labor or materials for free, depending on the type of contract. So it is important to determine whether or not you are doing something you do not need to do because the customer has a service contract with another company.

Find out about past service and repairs on the system. If you know a system is five years old, you may think the controller is no longer under warranty. But if the controller was replaced just 90 days ago and is under a one-year warranty, you can take the controller back to the supplier for exchange. The customer will appreciate not having to pay for another controller and will call you back the next time service is needed.

14.6 Contractor liability

Some contractors give customers advice over the telephone about how to correct a problem. If you do this, be aware of potential liability. For example, pushing the reset button on the storage tank is a very simple procedure, and you may suggest that your customers do this themselves. It saves you time and saves them the cost of a service call. But tell them first to turn off the circuit breaker. Emphasize that they should never remove the front plate on the tank until they have turned off the power.

You might rather not give any instructions over the telephone. Even if you only need to reset the heater you can make the visit worthwhile for the customer and for yourself by performing a routine service check while you are there.

14.7 Overall checkout

You should always check the entire system while you are on a service call because many times more than one problem exists. For example, you may replace a defective pump. Later, when this new pump also fails, you find that a defective valve was preventing water from getting to the pump, causing the pump failure. Keep in mind that a "system" requires proper performance of all the components working together.

While you check the system, consider ways you can improve its performance. For example, open-loop systems can include an air vent, a vacuum breaker, a pressure relief valve and a freeze valve. You will find many direct systems do not have all of these components, even though each one has a definite function. You can give the customer a better working system by adding these useful components.

At the same time, do not change the system for change's sake. Some contractors do not like or do not understand controllers or PV systems. So rather than make repairs, they change the whole system. If you do not want to work on one type of system, refer the job to someone else.

When you first look at a system, prepare an estimate for the customer including the cost, the results and the benefits of the repairs. After you complete the repairs, test the system completely once again. Be sure that it is right. If you have to go back on a second or third call, you lose whatever money you made on your first call. And finally, point out your work so the customer knows what you have done.

© UNBS 2009 – All rights reserved

14.8 Investigating consumer complaints — an example

Suppose a collector loop pipe has burst, but the customer manually drained the system to prevent freeze damage. The collectors were drained using the proper isolation and drain valves; yet the next morning water was trickling from the collector and a pipe was ruptured. Somehow water had gathered in the collector. You should check several possible causes.

First, is the homeowner sure all the water was drained from the collector? Is the system installed to prevent water being trapped when the collectors are drained? Investigation reveals the system contains a vacuum breaker at the collectors and the drain valves are installed in such a manner that one is at a higher level than the other. You determine the amount of water the homeowner says was drained represents what would have been in the collectors and piping — unless, of course, there is a small water trap in the collector or collector piping. If the collector is large and mounted in a horizontal position, are the flow tubes bending in the midsection (creating a water trap)? Investigation reveals no trap.

There could be another culprit — the isolation valve. Although the valve was closed by the homeowner, sedimentation build-up or a malfunction could have caused the valve to leak, allowing water to slowly seep to the collectors, freeze and rupture the pipe.

14.9 Lifestyle analysis

Some people think when they acquire a solar DHW system, they have an unlimited supply of hot water. Be sure they understand the DHW system storage can provide the hottest water during the late afternoon and early evening hours. Keeping this in mind, they should use hot water during these periods to achieve the best results from the system. To minimize their back-up heating expense, they could, for example, take showers and use the dishwasher during the evening and use only small amounts of hot water in the morning. Here are some questions that you may want to ask if the complaint is "not enough hot water" or "high electric use":

1. How many people are using the hot water?

2. Have recent guests added to the water use? How many guests?

3. Have extra washing (clothes or dishes) demands recently been put on the system?

4. When is the family's major use of hot water?

5. Has the weather been clear, allowing the maximum solar heating? Or has it been overcast, especially around the middle of the day?

6. Are water bills higher than usual (perhaps indicating a leak in the system — perhaps a leak under the slab)?

NOTE Remember, this is only a sample of the questions service personnel might ask.

14.10 Common problems

Some common problems are easy to identify and correct. Other problems, such as "not getting enough hot water" require investigating numerous components, the system design and location, as well as the homeowners' lifestyle. This section first discusses problems that are easy to identify and then describes problems that demand more investigation. A detailed and concise listing of these problems, the components to check, the possible causes, and the corrective actions are listed in Section 4, Module: Troubleshooting Checklist.

The simplest way to find out if the system is working is by turning off or disconnecting the electric back-up element (or other source of back-up heat). Some installers provide a switch near the storage tank for this purpose. In most cases it is necessary to turn off the appropriate circuit breaker at the electrical load center.

 © UNBS 2009 – All rights reserved

Certain symptoms are obvious, but you may find more than one problem. Therefore, once you identify the initial symptoms, continue the diagnostic procedure.

Before you begin the diagnostic procedure, ask the owners to describe any symptoms they have noticed (for example, insufficient hot water, pump running at night, noisy pump or leaking collectors). Use this information and the Troubleshooting Checklist Module to quickly identify the causes. Then follow this procedure to identify other, less obvious problems.

The most common problems are related to the following:

- Controls and sensors
- Pumps and flow rates
- Thermosiphoning and check valves
- Freeze damage
- Collector shading
- System sizing and consumer lifestyle

14.10.1 Controls and sensors

If the pump operates constantly or does not operate at all, the problem may be in the control system.

The controller itself, a sensor or the wiring might have been damaged by lightning strikes, line voltage surges or short circuiting from water, rust or abrasion. Each of these components should be examined. But if the pump does not operate, the problem could also be in the pump itself or the piping.

14.10.2 Pumps and flow rate

If the system controls are working correctly, an inoperative pump may be due to a stuck impeller, a burned-out motor or a broken shaft. These types of problems may be expected over the lifetime of any component subjected to the temperature and cycling stresses of a solar system pump.

Even though a solar pump is operating and is being controlled correctly, there still may be problems with the actual flow rate in the collector loop. If the pump has been sized to just barely overcome the pressure head of the collector loop, an unexpected added resistance can stop all flow through the collector. For example, air in the fluid may, over a period of time, collect in a section of piping, especially if it cannot escape through a vent to the atmosphere. This "air lock" can prevent any flow if the pump does not have the capacity to compress the air completely and force it through the system.

In an indirect system, loss of collector fluid pressure can also prevent flow in the collector loop. The pump is generally not sized to overcome the static head or pressure due to the difference in height between the top and bottom of the collector loop. It is usually sized to maintain the desired flow against the dynamic head or pressure due to the resistance to flow in the pipes, fittings and valves. If the fluid pressure to overcome the static head is lost, then the pump may not be able to maintain flow against the combined static and dynamic head of the system.

14.10.3 Thermosiphoning and check valves

As the liquid in the active system collector loop becomes cooler in the evening or in colder weather, it becomes denser and heavier, flowing down into the storage tank. In turn, it forces less dense, heated liquid up into the collector where this heated liquid cools. This action, if not stemmed with a properly operating check valve, can result in excessive loss of heat. In addition, this action often deceives the collector sensor and controller into believing the collector is hot and thereby activating the pump intermittently during the evening and colder nights.

© UNBS 2009 – All rights reserved

The most common check valve utilized in active solar systems is the vertical ring check valve. Unfortunately, scale and sedimentation build up over time may prevent this valve from seating completely. Defective valves must be cleaned of all sedimentation and corrosion or replaced. A simple and relatively accurate method of determining if the check valve is defective is to check the operation of the pump at night. If the pump is turning on and off (on differential controlled systems), leaking through the check valve and thermosiphon heat loss is indicated.

14.10.4 Freeze damage

Burst collector tubes and piping are a result of an improperly functioning freeze protection system. In a differential controlled system, the fault may lie in the freeze sensor operation, in the sensor's location or in the controller itself. If the system has a freeze sensor but no freeze protection valve, a power failure during a freeze could result in pipe rupture. It is not uncommon to have a power failure during a freeze.

In a system using an automatic freeze prevention valve, the valve or its location may be at fault. This type of valve often fails to reseat properly after opening. Extreme temperatures during summer conditions can affect the calibration and internal components of the valve, which in time may lead to failure or leakage. A leaking valve should be removed, serviced and recalibrated per manufacturer's recommendations or replaced to ensure proper operation during the winter season.

Freeze damage can also occur when the collector is "drained." (Some systems have "traps" in the piping that prevent complete drainage.)

14.10.5 Other potential problems

The common problems discussed above are fairly easy to diagnose. The following problems require more investigation because they cannot readily be seen.

14.10.5.1 Shading the collector

Collector shading may not be a problem in the summer months, but during winter months, the sun is at a lower position in the sky and shading from adjacent trees or man-made structures may occur. Relocation of the collector or trimming vegetation causing the shade are the only solutions. In both cases, use the Crome-Dome Collector Siting Aid provided in the Appendix or an appropriate site selection device to make sure that shading of the collector does not occur.

14.10.5.2 Pipe insulation degradation

Ultraviolet (UV) rays and extreme system temperatures accelerate degradation of many materials, especially exterior pipe insulation. Although many manufacturers claim their pipe insulation contains ultraviolet inhibitors and does not require a protective coating, sustained exposure appears to degrade almost every unprotected material.

Therefore, all insulation should be inspected for degradation and be replaced as necessary. Exterior insulation should be coated with UV resistant material. Several insulation manufacturers offer a coating for this purpose. Latex paint that matches the roof color and has pigments that inhibit UV degradation is also available.

Insulation that has degraded due to high temperatures must be replaced with a brand that can withstand such temperatures. This is critical for insulation that is used on the collector return line directly adjacent to the collector. When replacing exterior insulation on the roof area valves, take care not to restrict the operational parts of these valves.

14.10.5.3 Equipment sizing

If solar system equipment is sized improperly, the homeowner might not have enough hot water or might have excessive utility costs. Use Annex K to determine proper system sizing.

 © UNBS 2009 – All rights reserved

14.11 System checkout

Use the following procedures to diagnose system problems and can also be used to verify that new systems are installed correctly and working properly.

The simplest way to find out if the system is working is by turning off or disconnecting the electric back-up element (or other source of back-up heat). Some installers provide a switch near the storage tank for this purpose. In most cases it is necessary to turn off the appropriate circuit breaker at the electrical load center.

With the electric back-up element off, the system - if it has been properly sized to the owner's demand - should provide ample hot water on bright, sunny days and even on days with a modest amount of cloud cover. If the system fails to provide enough hot water, or if the water is not hot enough (lower than 115°F), something may be wrong with the system operation. Use the following procedure to identify the problem and its cause.

Certain symptoms are obvious, but you may find more than one problem. Therefore, once you identify the initial symptoms, continue the diagnostic procedure.

Before you begin the diagnostic procedure, ask the owners to describe any symptoms they have noticed (for example, insufficient hot water, pump running at night, noisy pump, or leaking collectors). Use this information and the Troubleshooting Checklist Module, to quickly identify the causes. Then follow this procedure to identify other, less obvious problems.

1. **Collectors**. Standing on the ground outside and looking at the collectors, verify these details:

   a. **They receive very little shading**, if any, from three hours before solar noon to three hours after, for all seasons of the year. (Appendix: Crome-Dome Collector Siting Aid gives a method for estimating the sun's location in relation to the collector for all seasons of the year.)

   b. **They face approximately south** (within 45° east or west of south). If they are oriented outside of this range, collector surface area should be increased above normal sizing requirements.

   c. **They have a reasonable tilt**. To maximize solar system performance in the winter, proper tilt is latitude plus 10°-15° from horizontal. For example, in Orlando, Florida, optimum tilt is 43° (28° + 15° = 43°).

   d. **They are not leaking**. Water running off the roof or collector fluid stains from the collector area indicates an obvious leak.

   e. **For systems utilizing PV modules as the control method**, the PV module is not shaded or covered with dirt.

   Any of these problems reduces the performance of the system. However, avoid climbing on the roof at this stage unless you have determined the exact problem and need to perform repairs or service.

2. **Back-up heating element**. At the storage tank, check to see if the electric back-up element is on or off. Solar tanks usually have only one element, located in the upper area of the tank. The element may be wired to a separate switch, but by code, it must also be controlled by a 230 VAC breaker at the house load center.

   If it has been off for some time and the area has just experienced a period of cloudy weather, the storage tank won't contain much hot water. If it is on and it is also a bright sunny day, turn the element off so only the solar system operates for the rest of the procedure. For your own safety, make sure that it stays off for the remainder of the procedure.

   If the symptoms warrant it, remove the element cover plate and check the setting on the tank thermostat. Set it to the lowest necessary temperature (usually about 120-125°F). Finally, make sure the bottom element, if any, is properly disabled or if a conventional tank is used, set to a low temperature. Sometimes, the over-temperature breaker above the thermostat has deactivated the

© UNBS 2009 – All rights reserved

element. To reset this breaker, simply press the reset button. (See Appendix: Electric Water Heater Circuitry for a description of the operation of an electric water heater.)

3. **Plumbing attached to the tank**. Inspect the plumbing attached to the tank(s). Identify and verify the proper connection of each of the following elements according to the system manual or the plumbing schematics in this publication. (In some cases, the tank may be different from the one diagrammed in the manual and have different plumbing connections. Note these variations.)

   a. **Hot and cold water service connections**. If there is a tempering valve, is it connected properly? Generally, the hot, cold and mixed ports of the valve are marked, as are the connections to the tank.

      The mixing valve should also be located below the top of the tank so it is not continuously exposed to the hottest water of the system. Check the temperature setting of the valve. (Keep in mind that some anti-scald valves can be installed above the top of the tank.)

   b. **Collector supply and return connections**. Does the supply line run from the bottom of the tank and the return line from the collector deliver water below the thermostat of the back-up heating element? Systems that utilize a timer as the pump control method can have collector supply and return lines located at the bottom of the storage tank.

      Finally, note where the pipes penetrate the ceiling/roof so the lines may be traced for proper connection at the collectors).

   c. **Control valves and their settings**. A serious problem can sometimes be traced to a valve being incorrectly open or closed or having been installed in the wrong location.

   d. **Pump and check valve**. Generally an arrow or some other symbol on the pump and the check valve indicates the direction of water flow. Be sure these devices have been installed so flow is in the right direction. (The check valve may be covered by insulation. You can usually find it by feeling the pipes through the insulation.)

   e. **Piping insulation**. Check the insulation around the tank. Ensure there are no uninsulated pipes or valves. At least two feet of the "cold-in" and "hot-out" lines should be insulated. If convenient, check for pipe insulation in the attic. Note deficiencies for later service.

Pressurized indirect systems only:

   f. **Expansion tank**. Check the expansion tank location. The commonly used diaphragm type tank may be installed anywhere in the collector loop and in any position. However, for the most efficient pump operation, it should be located on the suction side of the pump with the distance between the pump and expansion tank as short as possible.

      An expansion tank may also be used in the water side of an indirect solar system if a back-flow preventer is installed on the cold-water supply line. The tank must be sized to accommodate any expansion in the total storage capacity of the hot water system.

   g. **Pressure gauge**. The system fluid is generally charged to a static pressure (pump not running) of 10-30 psig. If the collectors are located more than one story above the pump, system pressure will be increased. On the discharge side of the pump, the pressure gauge normally registers additional pressure (about 3-5 psig) when the pump is running. The pressure also fluctuates depending on the temperature of the collector fluid.

4. **Control system**. Locate the control sensors, temperature sensors and the electronic controller box (if one is present). Determine which type of control system is used:

   a. **Thermosiphon and integral collector storage (ICS) systems**. Controls and sensors are not needed.

 © UNBS 2009 – All rights reserved

b. **Snap-switch (absolute)**. These sensors are attached to the pipes with #14 to #18 gauge wire connected to the 115 VAC supply to the pump motor. Although usually this type of control system does not have a control box, occasionally a control box houses a step-down transformer to supply low voltage to the collector snap-switch.

c. **Timer**. The pump is connected to a simple clock timer plugged into an electrical outlet. Check the time and on/off settings and that the timer functions properly.

d. **Differential temperature**. Sensors are attached to a controller by two small wires. The controller is plugged into a 115 VAC electrical outlet. Once you have located everything in the control system, consult the manufacturer's information or controller labels to ensure everything is connected properly.

e. **Photovoltaic (PV)**. The PV module is generally wired directly to a DC motor pump with from #14 to #18 gauge wire. Sometimes an electronic pump starter is connected in between the PV module and the pump to facilitate current matching. There may also be an on/off switch. Check the switch position and all connections.

5. **Pump operation**. Check the operation of the pump. Confirm that it is plugged in or wired correctly and power is available. Some controllers have an on/off automatic switch and you can manually place the switch "on." You can usually hear a slight hum when the pump is running. You might also be able to see the motor fan moving or feel a slight vibration.

WARNING! Many pump motors are very hot after operating continuously for some time.

In some systems, an indicator lamp on the controller signals when power is supplied to the pump. When this indicator is on, the pump should run.

a. **Sunny day**. On a sunny day, the pump should run most of the time. If the system has a differential temperature controller or PV module, passing clouds may cause the pump to cycle on and off occasionally.

If the system has a snap-switch control, the pump tends to turn on and off more often.

b. **Cloudy day**. On a heavily overcast day or at night, the pump should not run. To see if an AC-powered pump is defective, unplug it from the controller and plug it directly into a wall outlet. If the pump does not have its own plug, direct wire the pump to power (bypassing the controller and/or switches).

CAUTION: Do not attempt this procedure if you are not familiar with safe electrical practice.

It is generally easier and safer to "fool" the controller into turning on the pump. See item *7a, Differential controller test*.

6. Flow in the collector loop. If there is a flow meter or indicator in the collector loop, determine if the fluid is actually moving. If there is no flow indicator, use the following methods:

a. **Sunny day**. If it is a sunny day and the pump is running, pull back a portion of the insulation on both the collector supply and return pipes (at points a few feet from the tank). Carefully feel (or measure with a thermometer) the pipes to make sure that the return line from the collector are hotter than the supply line going to the collector. On a sunny day, such a temperature difference (usually 5-15°F) indicates fluid is flowing in the collector loop.

If you cannot detect a temperature difference, turn the pump off by disconnecting its power supply. Leave the pump off for a few minutes; long enough for the fluid in the collector to heat up. Then restart the pump and feel the pipes again.

© UNBS 2009 – All rights reserved

Within several seconds, you should feel the hotter fluid from the collector pass through the collector return line into the tank. If you do not feel this surge of hot fluid on a sunny day, there is probably some blockage hi the collector, the pump, the valves or the pipes.

b. Cloudy day or at night. On a very cloudy day or at night, you can still use the above procedure to check for flow in the collector loop. However, make sure the pump has been off for a long time, so that the fluid in the collector is relatively cool.

Then, when you turn on the pump again, you should feel a surge of cool fluid pass from the collector into the tank. Of course, this method works best on colder nights.

To determine the actual flow rate through the solar collectors, use a flowmeter or one of the methods discussed in Annex N. Check the controller operation before determining the exact flow rate.

7. Control system operation. Conduct the following tests to check the control system.

WARNING: For any procedure involving electrical equipment, always turn off or disconnect the unit from the power supply before making any adjustments or resistance measurements.

a. Differential controller test. You may need to follow the manufacturer's checkout procedures to not void the warranty. If their procedure is unavailable, you can follow these steps to check most differential controllers with thermistor sensors.

i). Disconnect and separate all sensor inputs. Identify the sensor wires for proper reconnection.

ii). On drain-down controls that use normally closed freeze sensors, short the freeze sensor input wires or terminals at the control.

iii). With the controller in its normal operation or automatic switch position, short the collector sensor input wires or terminals together. The control should turn on (indicated by lights and/or pump operation).

iv). Remove the short and the control should turn off. (Some older-model controllers may utilize a time delay circuit to keep the pump from cycling on and off too often.)

v). The controller is probably in good condition if it responds correctly to these steps. Test the temperature sensors next before proceeding to a more detailed test of the controller.

For the differential controller that uses resistance/temperature devices (RTDs) — positive temperature coefficient sensors — the tank sensor input should be shorted in Steps iii and iv. Shorting the collector sensor indicates a low temperature and the pump should stay off. Shorting the tank sensor should turn the pump on. If freeze protection and the collector sensor functions are combined, shorting the collector terminals simulates a freeze condition. The pump should turn on if recirculation freeze protection is used.

b. Sensor test. To check the temperature sensors of a differential controller, measure their resistance. Disconnect the sensors from the controller terminals or lead wires and use a volt-ohmmeter to measure the resistance across the sensor wires.

For thermistors and metal film sensors, compare their resistance to the manufacturer's temperature versus resistance specifications. Also, see Annex M.

Generally there are two types of thermistor sensors: a 3,000 ohm sensor and a 10,000 ohm sensor. Sensor resistance should match the measured temperature as closely as possible. (See Table 1 in Annex M.)

 © UNBS 2009 – All rights reserved

For example, when the environment temperature is 25 °C, the 3,000 ohm sensor should read 3,000 ohms, and the 10,000-ohm sensor should read 10,000 ohms. As the temperature increases, the resistance decreases. At 32.2 °C, a 3,000 ohm sensor reads 2,200 ohms; a 10,000 ohm sensor reads 7,333 ohms.

The general range of solar system temperatures is 21.1 – 60 °C for the tank sensor and 100- 150°F for the collector sensor depending on the time and conditions of day. If an "open" or "short" condition is indicated, check the wiring between the controller and sensor.

A common cause for an "open" condition is a broken connection between the wiring and the sensor. A "short" may be caused by a piece of metal pinching the sensor wire and conducting it to ground or causing it to short across the wires.

For temperature-actuated switches (freeze sensors, upper limit sensors, and snap-switch controls), you can also check the switch position with a volt-ohmmeter. The switch is either normally open or normally closed, and changes position at a particular temperature. You can check the freeze sensor by placing it in ice water and measuring with the VOM to see that the switch changes position.

c. Detailed controller test. A complete method of checking the controller involves the use of a differential controller test set. Containing fixed and/or variable resistances, the test set is generally calibrated for a specific manufacturer's line of controllers, though it can be adapted to test other brands of controllers. Instructions for its use are usually supplied with the tester.

The test set enables you to determine the exact "turn-on" and "turn-off temperatures of the controller. Compare these differential temperatures to the manufacturer's specifications. If the measured temperatures do not match the specifications, and if the setting is adjustable, you can change the setting to match the manufacturer's recommendations.

d. Photovoltaic (PV) module controller test. Use the following procedure to check the voltage and current output of the photovoltaic module on a sunny day:

i. Disconnect the pump from the wires coming from the PV module or pump starter box.

ii. With a volt-ohm-meter, check the voltage between the positive and negative terminals of the PV module. This open-circuit voltage should be between 14 and 22 volts, in almost any amount of sunlight.

You should also check the PV modules short-circuit current with a volt-ohm-meter (with milliamp measurement capability). Under sunny conditions, the short-circuit current should be between 200 and 1000 milliamps, depending on the voltage rating of the PV module. If there is no amperage at good sun conditions, the PV module or the connecting wiring may be defective. (Do not exceed the amperage measurement capacity of your meter.)

If there is no amperage at the pump, check the amperage of the module at its roof location to determine if there is a break in the connecting wiring.

iii. To check the DC-powered pump, use two 6-volt lantern batteries connected in series (12V). Disconnect the PV panel from the pump and connect the pump to the proper terminals of the batteries. If the pump does not operate off the batteries, the pump is defective. If the pump does run off the batteries, the PV module or connective wiring is defective.

8. Heat-transfer fluids and the collector loop.

For indirect systems, inspect the heat transfer fluids; for direct systems, inspect the collector loop.

Perform item 8a for pressurized indirect systems only:

a. Evaluate heat-transfer fluids. All heat-transfer fluids must be inspected and evaluated periodically. Most fluid manufacturers and system vendors recommend periodic inspections. To

© UNBS 2009 – All rights reserved

check the fluid, remove a few ounces from a fill or drain point. (Be careful not to spill any fluid and do not allow air to enter the system.)

To determine the average condition of the fluid, take the sample from a point above the bottom of the collector loop, during a period when the system is operating.

Examine the sample for rust, scale, water deposits, sludge and gummy materials. Rust or scale accumulation is probably the result of degradation of iron in the system. If you find water in the sample, look for system or heat exchanger leaks.

Sludge in the sample indicates heat transfer fluid degradation, which in time can lead to clogs in the collector and heat exchanger loop. Fluids can deteriorate some plastic seals and gaskets. Gummy materials in the sample usually indicate this deterioration is occurring.

Test the various fluids using the specific manufacturer's recommended procedures. Be sure to obtain the fluid manufacturer's recommendations for filling, flushing and refilling of various heat-transfer fluids. Some fluids must be completely drained and the system recharged with new fluid. Other fluids may not need to be drained, only more fluid added. In addition, systems using one type of fluid can be flushed with water while other systems must be flushed with specified fluids.

Perform items 8b-f for direct systems only:

b. **Drain the collector loop**. Disconnect the pump and controller from the power supply.

CAUTION: The PV module can be disconnected from the pump only for short periods of time (4-5 hours).

Isolate and drain the collector loop, if drains are available.

CAUTION: If you drain the collector loop on a sunny day, direct the hot water to a safe point of discharge.

A loop that drains easily indicates properly pitched (or tilted) pipes and a path for air to enter the system. A vacuum breaker valve or a system air vent at the top of the collector loop may supply this path. Sometimes air enters during draining only through a second drain valve at the bottom of the loop.

c. **Flush the collector loop**. Isolate and flush the collector loop, preferably in the reverse direction of normal flow. If the check valve is located on the collector supply, use the cold-water service pressure to back flush the collector return. If the check valve is located below the collector return hose bib drain, use a garden hose with a double female adaptor connected to both an outside faucet and the collector return drain.

In both cases, force water out the collector supply drain and through an attached hose leading to a point of safe hot-water discharge. Check this water for dirt, scale and other signs of blockage. Stop when the discharge no longer contains any debris.

If sedimentation build-up in the tank is a problem, isolate the tank and drain several gallons of water to remove any sedimentation. Advise the owner this draining should performed at least once per year and preferably every six months.

d. **Test the check valve**. Use the hose bib drains and service water pressure to check these two valves: a horizontal swing check valve or a vertical in-line ring check valve.

Send water against the normal flow direction. Water flowing past the valve indicates a faulty seat or stuck hinge that will not seal under the low backflow of unwanted ther-mosiphoning.

Check a solenoid-actuated or motorized ball valve by using the manual lever (if it is present) to open and close the valve while checking for flow. Some motorized valves are not designed to

 © UNBS 2009 – All rights reserved

close off against normal city water pressure. Verify the normal operation of these valves by listening to and watching the valve open and close as the pump is turned on and off. Since check valves are very prone to problems from sedimentation build-up, they should be inspected periodically.

If the check valve cannot be tested by the above backflow procedure and it is suspected of being the cause of night-time thermosiphoning, you need to examine the system at night. When the fluid in the collector has cooled to a temperature sufficiently below the fluid in the tank, feel the collector supply and return pipes a few feet from the heat of the tank. If one pipe is warm, the check valve might not be sealing.

Sometimes a leaking check valve can cause a differential control to cycle the pump at night. To confirm this speculation, unplug the pump from the differential controller and plug a clock into the controller instead. Note the clock's time. Note the time again the next morning before the solar system would normally start. If the clock has advanced because the controller supplied power to it, the check valve is not sealing and needs to be replaced.

To check a mixing valve, feel or measure the temperature of the service hot water at the closest house hot water faucet. As you measure, adjust the mixing valve over its range of motion, leaving it at the desired temperature setting. Sometimes these valves stick open or closed after prolonged use and must be repaired, replaced or eliminated.

e. **Purge air from the system**. With the collector supply isolation valve open, close the collector return isolation valve. Force water out of the collector return line drain (and hose). Close the return line drain when air no longer bubbles out the drain hose. Open the collector return isolation valve.

f. **Plug the pump and controller back in**. Check for proper operation and return the electric heating element switch (if provided) to its original on/off position.

9. Inspect the collectors up close

Caution: Some roofs can be damaged by a person's weight. Walk slowly and make sure the roof can support you wherever you move. Be careful that you do not break concrete tiles or brittle asphalt shingles.

Look for the following items:

a. **Dirty glazing**. Rain generally does a good job of keeping collectors clean, but occasionally in very dry and dusty weather they will gather a visible layer of dirt and dust. If so, they should be cleaned with mild soap and water. Clean the collectors only when they are not hot to the touch, in the early morning or late evening. Spraying the collectors with a garden hose during early morning or late evening hours is also effective.

b. **Condensation or outgassing on the inside of the glazing**. A major part of the solar energy striking the collector may be blocked by moisture or chemical deposits from outgassing of the collector insulation on the inside of the collector box.

To remove extreme and lasting condensation, take off the glazing, wipe it dry and dry the box. To minimize future water collection, drill small holes (weep holes) in the frame - a few in the bottom of the frame for drainage and two at the top corners to allow warm moist air to escape. Screen the holes to keep out insects.

To clean off inner outgassing deposits, the glazing will have to be removed and the glazing cleaned with a detergent or a solvent such as alcohol. (Depending on the amount of time they have been on the glazing, these deposits may be difficult to remove.)

c. **Leaking connections**. Repair small leaks around fittings and pipes to minimize heat loss from the system. Freeze damage causes many leaks. Generally, leaks appear in the collector flow tubes.

© UNBS 2009 – All rights reserved

d. **Temperature-pressure relief valve**. Look for stains on the roof around this valve, indicating repeated discharge of collector fluid from over-temperature conditions. This symptom generally indicates a lack of flow in the collector loop even though solar heat is available. (Note that most installations now use pressure relief valves in the collector loop.)

Over temperature of the collector may be due to a low use of hot water, a faulty upper limit sensor, or air in the collector loop that prevents the pump from maintaining flow. An air vent at the highest point should discharge this air from the system.

WARNING: Lifting the test lever of the temperature pressure relief valve may cause the valve to fail. Be prepared to replace the valve before manipulating the test lever.

e. **Air vent**. When you fill the system, you might hear and even feel a stream of air leaving a properly operating air vent. Most air vent caps must be loose (to permit the air to escape).

NOTE The cap should be in place to prevent dirt from entering the valve or insects from plugging it, but it should not be completely tightened.

When water reaches the air vent, the vent should close fast, without leaking. Many valves have a stem that can be depressed to allow fluid to escape, flushing the valve seat clean.

CAUTION: When filling a system that has been solar heated, the escaping air may be extremely hot and contain steam until the system reaches normal operation.

f. **Vacuum breaker**. When draining the collector loop, you should be able to hear air entering the valve, permitting water drain-down.

NOTE In reference to air vents and vacuum breakers, the interior valve seats and float pivots may collect deposits and become inoperative. Disassemble the valve, if possible, and clean it thoroughly to ensure proper operation and to eliminate air pockets and drainage problems.

g. **Pipe insulation**. Look for cracks or splits, opened joints or deteriorating insulation. Most closed cell foam insulation should be wrapped or covered with a protective paint to shield it from ultraviolet radiation. Plasticized vinyl lacquer and exterior latex with a white pigment both protect well and may be found at air conditioning supply stores.

h. **Sensor location**. Sensors placed on the collector outlet need to be in good thermal contact with the pipe and insulated from the surrounding air. Sensors placed inside the collector box generally do not require the same intimate contact and may even have to be separated from the absorber plate. Refer to the manufacturer's recommendations.

Check the wire leads to these interior sensors to ensure they are not crimped or exposed to the metal of the box. Sensor wires that cross over the metal edges of the box will wear through and short due to weather induced movement of the box and wires.

Also, if a freeze sensor is used, check that it is indeed a freeze-actuated switch, different from the actual collector sensor, and is either wired separately or according to the controller manufacturer's recommendations. The freeze sensor also needs to be in good thermal contact with the pipe or collector plate and to be insulated from the surrounding air.

i. **Collector anchoring**. While not directly affecting the efficient operation of the solar system, improper mounting of the collectors can cause serious problems, such as roof leaks or building damage from high winds.

Supports should be durable, materials tightly fastened, and mountings strong enough to resist the near-hurricane force winds to be expected in Florida. Roof penetrations should be well sealed with a durable roofing sealant to prevent leaks and interior water damage.

© UNBS 2009 – All rights reserved

j. **Collector piping**. When the system has two or more collectors, they should be plumbed in a parallel configuration, unless the manufacturer suggests otherwise. The pipes and interior collector tubes should all have a continuous slope (1/4 inch per foot).

They should not contain any low pockets that do not drain or high pockets that capture air. Use a builder's level to correctly determine proper pipe slope, as the roof or shingle line may not be level.

k. **Photovoltaic (PV) module**. Ensure the PV module is securely mounted and properly oriented for the geographical area and collector mounting. Check that all electrical connections are secure and wiring is protected from environmental degradation.

15 Troubleshooting checklist

When the symptoms for problems have been identified, the following checklist can be used to determine the probable causes and the appropriate corrective actions. During system evaluation, the complete system should be checked to identify any other situations that might lead to more problems. A well-maintained system is the best insurance against future problems.

Solar system problems are difficult to organize because no problem is more important than another — to the solar system owner, any problem is important.

The checklist begins with problems relating to water temperature. It continues with general system problems and problems relating specifically to the controller, and then system leaks and drainage.

Problem	Check item	Possible cause	Corrective action
No hot water	Auxiliary heater (electric)	No power to auxiliary back-up heating element	Check high temperature protection and push reset button above thermostat. (Use caution when dealing with electricity)
	Auxiliary heater (gas)	Failure to ignite	Check pilot light mechanism
		Safety switch malfunctioning	Check and replace
		Defective automatic pilot valve	Check and replace
		Pilot wont stay lit:	
		Too much primary air	Adjust pilot shutter
		Dirt in pilot orifice	Clean and open orifice
		Pilot valve defective	Replace
		Loose thermocouple connection	Tighten
		Defective thermocouple	Replace
		Improper pilot gas adjustment	Adjust
	Auxiliary heater thermostat	Thermostat defective	Replace
	Mixing and/or anti-scald valve	Improper adjustment	Check water temperature at house faucet and adjust valve setting
		Valve defective	Replace or remove from system plumbing
	Distribution piping	Leak (under slab or in walls)	Locate leak and correct
Not enough hot water	Auxiliary heater	Undersized for hot water demand load	Replace
		Storage tank losses	Insulate tank
		Thermostat set too low	Increase set point temperature
		Element failure	Replace element
		Thermostat failure	Replace thermostat
		Lower element disconnected in conventional rank system	Reconnect element and set thermostat to low

© UNBS 2009 – All rights reserved

			temperature
	Check valve	Heat loss due to defective or improperly installed check valve	Inspect valve and repair or replace
	Solar return dip tube	Missing, wrong location, defective	Replace dip tube
	Cold water supply dip tube	Missing or wrong location	Install in proper location
	Collector(s)	Absorber coating degradation	Recoat or replace absorber (contact manufacturer)
		Area undersized	Increase collector area
		Excessive condensation	Inspect and repair glazing seal, pipe gaskets and weep holes and vents at bottom
		Glazing dirty	Clean as required
		Leaks	Repair
		Orientation	Check orientation. Face collector 45 ^{o}C east or west of south
		Outgassing inside collector glazing	Clean surface and contact manufacturer
		Plastic glazing deteriorating	Replace
		Reduction of glazing transmission	Replace glazing
		Shaded by tree(s) or building(s)	Remove obstacle and shading or relocate collector(s)
		Improper plumbed	Check tilt for geographic area. Set 15 ^{o}C of latitude
	Differential controller	Improper operation (cycling, late turn on)	Compare with system schematic in installation manual
		Faulty sensors or controller	Conduct resistance measurement or check by placing sensors against hot and cold-water glasses and watching pump function. Replace defective units.
		Improper wiring or loose connections	Compare with system schematic. Check for proper connections. Seal all splices against moisture.
		Shorted sensor wiring	Check wiring for breaks, metal contact, water exposure and corrosion.
	Heat exchanger	Sized too small	Replace with properly sized heat exchanger. Insulate.
		Scaling, clogging	Back flush, clean
	Isolation valves	Closed	Open
	Mixing/ Anti-scald valve	Improperly adjusted	Reset temperature indicator
	Owner	High water usage	Check system size and discuss solar system and owner's lifestyle
	Piping	Clogged with corrosion or sediment	Replace excessively corroded components
		Insufficient insulation	Add insulation where required

© UNBS 2009 – All rights reserved

Troubleshooting checklist (*cont.)*

Problem	Check item	Possible cause	Corrective action
Not enough hot water (Cont.)		High heal losses	Check insulation for splits, deterioration, absence
		Nighttime thermosiphoning	Check for pump operation at night
		Improperly plumbed	Compare with system schematic. Check flow direction.
		Isolation valve closed	Open valves
		Isolation valve failure after closing	Replace valve
		Flow blockage	Flush system. Check effluent for dirt/scaling.
		Low system pressure	Check pressure gauge. Refer to owner's manual for correct pressure
	Pump	No power	Check breaker, pump, and controller. Repair or replace
		Flow rate too high or too low	Adjust flow rate
		Defective	Check and replace
		Activation switch off	Check for switch on PV to pump wiring
		No power	Check breaker, pump cord, controller fuse, if any. Replace if necessary.
		Faulty pump	Listen for irregular noises in pump operation. Feel collector feed and return pipes for temperature difference.
		Runs continuously	Check control system for breaks and shorts
		Improperly installed	Compare with system schematic
	Sensors	Improper wiring, cuts, or loose connections	Check and correct
	Sensor wiring	Shorted wiring	Check repair
	Storage tank	Too small	Install larger tank
		Storage losses	Insulate tank with insulation blanket
No hot water in morning	Check valve	Stuck open or does not seat	Replace check valve
	Controller	Sensor wires reversed	Check wiring and reconnect
	Water heater circuit breaker	Water heater circuit breaker shutoff	Turn breaker back on
	Freezing conditions at night	Recirculation freeze protection (with back-up power off)	Turn back-up power back on (circuit breaker)
	Occupants	Excessive consumption	Discuss hot water usage. Check system size and auxiliary heater status
Water too hot	Auxiliary heater	Thermostat set point too high	Reduce set point temperature
	High limit sensor	Improper calibration	Check, recalibrate and replace
	Occupants	No hot water use (vacation, etc.)	Run hot water to reduce tank temperature
	Mixing or anti-scald valve	Temperature set too high	Adjust
	Mixing/anti-scald valve	Valve failure	Replace valve
No water	Cold-water supply valve	Valve closed	Open valve

© UNBS 2009 – All rights reserved

Problem	Check item	Possible cause	Corrective action
High electric use	Piping, hot water distribution	Leak	Repair leak
	Tank	In dual element tank, lower heating element	Turn to low setting or disconnect
	Tank thermostat	Thermostat set too high	Check setting and adjust to desired temperature
		Inaccurate temperature dial	Recalibrate or replace
	Tank dip tubes	Collector return above tank thermostat	Increase length of dip tube
	Piping	collector return above tank	Check tank plumbing. Contact installer, if necessary.
Pump does not start	Differential controller	Controller switch in “off” position	Turn to “automatic” or normal operating position.
		Unplugged	Return power to controller
		On and/or off temperature differential set points too high	Reset according to specifications
		Loose contacts	Clean contacts and tighten connections or replace
		Defective components	Replace components or controller
	Controller circuitry	Sensors connected to wrong terminal	Correct per manufacturer’s recommendations
	DC pump	Loss of circuit continuity	Check and repair or replace
	Electrical power supply	On/off switch is “off”	Turn to “on”
		Blown fuse or breaker tripped on overload	Determine cause and replace fuse or reset breaker
		Brownout	Await resumption of utility power
	Photovoltaic module	Shaded	Relocate or eliminate shade
		Defective	Check and replace, if required
	Photovoltaic wiring	Improper wiring, cuts or loose connection	Check and repair
	Pump	Motor failure	Check brush holders and other mechanical components that may be loose, worn, dirty or corroded. Replace as appropriate and reasonable. Check for thermal overload.
		Pump motor runs when started by hand. Capacitor failure	Replace capacitor
		No power	Check breaker, cord and controller
		Stuck shaft, impeller, or coupling	Replace
		Frozen bearings	Replace
		Defective sensor(s)	Replace
		Improper installation	Clean and reinstall properly
		Sensors out of calibration	Recalibrate or replace
	Sensor wiring	Defective sensor wiring	Repair or replace
		Open collector sensor wiring	Clean wiring continuity. Repair or replace
		Shorted tank sensor wiring	Check wiring for continuity. Repair or replace
	Timer	Defective	Replace
		Wrong on and/off time	Reset, check battery.
Pump starts, but cycles continuously	Differential controller	On and off temperature differential set points are too close together	Reset according to specifications

© UNBS 2009 – All rights reserved

		Freeze protection setting too high	Reset according to specifications
		Faulty controller	Use controller test set to perform operation check. Repair or replace.
	Piping	Reversed connections to collector	Reconnect properly
	Sensors	Improper location	Relocate sensors as per system design or manufacturer's requirements
		Not properly secured	Secure properly and insulate from air
		Faulty	Test sensors. Replace if necessary.
Pump cycles after dark	Sensor wiring	Interference from radio or garage door opener, etc.	Use shielded sensor wire
		Radio frequency interference from close proximity to antenna.	Use shielded sensor wire
	Check valve	Does not seat	Replace
Pump runs continuously	Controller	Off temperature differential set point too low	Reset according to specifications
		Lightning damage	Replace controller
		Controller in "on" position	Turn to "automatic" or normal run position
	Sensor(s)	Sensor(s) out of calibration	Recalibrate
		Defective sensor	Replace
		Improper installation	reinstall
	Sensor wiring	Interference fro radio/garage door opener, etc.	Shielded cable may be necessary
		Shorted collector sensor wiring	Check wiring for continuity. Check wiring connections for weather tightness. Repair or replace.
		Open tank sensor wiring	Check wiring for continuity. Check wiring connections for weather tightness. Repair or replace.
Pump operates but no fluid flows from collector	Air vent	System air-locked. Air vents closed.	Disassemble and clean seat and seal. Replace if necessary.
		Improper location	Install at the highest point. Install at all high points if possible air trap locations exist. Install in true vertical position.
		Air vent cap tight	Loosen J/4 turn
	Check valve	Installed improperly	Check flow arrow on valve to ensure direction is per system design
	Collector	Flow tubes clogged	Flush collector tubing
	Drain-down valve	Drain-down valve stuck in drain position	Clean cause of sticking. Check power to valve.
	Fluid	No fluid in direct system	Open cold-water supply valve
		Loss of fluid indirect system	Locate leak and refill
		Loss of fluid in drain-back system	Cool system, locate leak, refill properly
	Isolation valves	Valves in closed position	Open valves
	Piping	Clogged or damaged piping	Unblock piping or repair damaged piping

© UNBS 2009 – All rights reserved

Troubleshooting checklist (*cont.)*

Problem	Check item	Possible cause	Corrective action
Pump operates but no fluid flows from collector (Cont.)	Pump	Broken impeller shaft	Replace shaft
		Impeller broken or separated from shaft	Replace impeller and/or shaft or replace pump
		Improperly installed	Install to ensure correct flow
		Not vented properly	Install in correct orientation
		Undersized	Check pumps specifications. Change pump if required.
	Valves	Valves closed	Open valves
Pump cycles on and off after dark	Check valve	Corroded or defective check valve	Repair or replace
Pump runs after dark, but eventually shuts off	Sensors	Defective	Change sensor
		Improper location	Relocate
		Sensor not insulated	Insulate
No power to pump with switch on	Sensor (freeze)	Open circuits	Check sensor and wiring. Repair or replace
	Controller output relay	Weak or failed relay	Replace relay or controller
Noisy pump	Air vents	Air trapped in system	Open automatic air vent
	Pump bearings	Dry or excessive wear	Lubricate or replace
	Pump impeller	Loose impeller	Tighten or replace impeller
	Pump location	Pump enclosed in small room (closet)	None
		Pump attached to wall-wall acts as amplifier	Relocate pump if noise is unacceptable
	Pump volute	Corrosion or particles in volute	Clean volute and impeller. Replace if required
	Vent port on pump (if applicable)	Air trapped in pump	Open vent port and/or vent valve and bleed air
Noisy system	Pump	Bearings need lubrication (if applicable)	Oil per manufacturer's recommendation
		Air locked	Bleed air
	Piping	Entrapped air (direct systems only)	Purge system by running water up supply pipe and out drain on return line (isolation valves closed)
		Pipe vibration	Isolate piping from walls
Controller does not turn on or off in the "automatic" mode but operates in the "manual" mode	Controller	Defective	Conduct function check and repair or replace
	Sensors	Defective sensors; resistance problem; sensors off scale	Check with multimeter (ohm). Correct or replace sensors.
		Improper contact or insulation	Ensure proper contact is made. Insulate sensors.
		Improper location	Relocate
	Wiring	Short or open	Replace or splice wire
System shuts off at wrong high limit or continues to run	Collector	Defective	Repair or replace
	Sensors	Defective sensor	Check with multimeter(ohm) and replace
		Improper location	Relocate
System leaks	Collector(s)	Pipe burst due to freeze or defective joint	Repair or replace. Check freeze-protection mechanisms.
	Freeze-protection valve	Did not reseal after opening	Recalibrate, if required, or replace.

© UNBS 2009 – All rights reserved

		Valve out of calibration	Recalibrate per manufacturer's instructions or replace
		Normal operation (most open at 42 ^{o}F)	No action
	Hose connection	Clamps not tightly secured	Tighten clamps, replace clamp or hose.
	Pipe joints	Thermal expansion and contraction.	Replace and provide for flexibility
		Joint improperly made	Reassemble
		Improper seal in system using glycol solution	Make a good seal. Use recommended sealer. Note: glycol will leak through joints where water would not.
	Pressure-temperature relief valve	Did not reseal after opening	Replace
		Defective	Replace
		Improper pressure or temperature setting	Reset, if possible, or replace
	Valves	Valve gland nuts loose	Tighten nuts. Replace seal or packing if necessary.
		Seats deteriorating	Replace seat washers. Redress seat. Replace valve if necessary.
Water comes off the roof	Pressure-temperature relief valve	Defective seal	Replace
		Activates due to no circulation through collector (s)	Check flow in collector loop. (See "Pump does not start" and "Pump operational but no flow to collector".)
	Freeze-prevention valve	Out of calibration	Calibrate, if possible, or replace.
		Defective seal	Repair or replace
		Normal operation (most open at 42 ^{o}F)	No action
	Collector piping	Ruptured piping due to freeze	Repair or replace
		Defective piping	Repair or replace
	Low-pressure valve installed on collector supply line	Power loss. Pressure loss from well.	No action required.
System does not drain	Collector (parallel)	Fins and tubes are horizontal and are sagging, preventing drainage from occurring	Straighten fins and tubes. Realign collector so it will drain completely
	Collector (serpentine)	Serpentine design prevents drainage	Blow water out of tubes with air compressor
	Piping	Insufficient slope for drainage	Check and ensure piping slopes ¼" per foot of piping
	Vacuum breaker	Does not open. Defective due to internal mechanism or corrosion.	Clean or replace

16 Maintenance

While a properly designed and installed solar heating system should be expected to give a service life comparable with that of other types of domestic heating system, some maintenance may be necessary to maintain the efficiency of the installation.

During a maintenance inspection at least the following checks should be added to the items listed in 10.8.

© UNBS 2009 – All rights reserved

a) Outside the building

1) that the glazing of the collectors is clean;
2) that the glazing is sound and free of cracks;
3) that there is no evidence of serious corrosion;
4) that any paintwork is sound.

b) Inside the building

1) that the sensing devices are firmly and properly in place (this may also form part of the external examination);
2) that there are no signs of corrosion;
3) that labels are in position and updated at the time of the service visit;
4) that the life of the heat transfer fluid has not expired.

17 Safety precautions

17.1 This section covers the safety aspects of the SDHW system. It describes the use of accepted practices that are common in many existing building and plumbing codes. Its purpose is to ensure the safe operation of the system with regard for human safety.

17.2 Release of hot or hazardous fluids

17.2.1 All parts of the SDHW system that are isolated, or are capable of being isolated by valves or other means, shall have a pressure relief valve set to open at the maximum recommended working pressure of that part of the system. The rating of the relief valve shall exceed the heat input of the collector(s) or other heat source.

17.2.2 Relief valve discharges shall not damage structural members, contaminate potable water sources, or create risk of fire, and shall not pose a hazard to health or safety, and shall drain to locations acceptable to local codes and ordinances.

17.2.3 All liquid containment components shall be capable of withstanding a minimum pressure 1 and ½ times the rated maximum working pressure of the system without rupture.

17.2.4 All systems shall be provided with an approved self-closing (levered) pressure relief valve and temperature relief valve or combination thereof. Such valve shall be installed in the shell of the water heater tank or in the hot water outlet, provided that the thermo-element of the valve shall be installed within the top 6 in. (150 mm) of the tank. For installations with separate storage tanks, the valves shall be installed on both tanks. Pressure relief valves may be located adjacent to the equipment they serve. There shall be no check valve or shut-off valve between a relief valve and the heater(s) or tank(s) that it serves.

17.2.5 All automatically controlled systems shall be equipped with an energy cut-off device that will interrupt the supply of energy to the water tank before the temperature of the potable water in the tank exceeds 88 °C or 12 °C less than the temperature setting of the temperature relief valve. This energy cut-off device shall be in addition to the temperature and pressure relief valve.

17.2.6 Temperature and pressure relief valves, or combinations thereof, shall comply with the requirements of ANSI Z 21.22 with a temperature setting of not more than 99 °C and a pressure setting not to exceed the tank or heater manufacturer's rated working pressure. The relieving capacity of these devices shall equal or exceed the heat input to the water heater or storage tank.

17.2.7 To avoid fluid damage or scalding due to relief valve discharge, drain pipe shall be connected to the valve outlet and run to a safe place of disposal. Drain pipe shall be as short as possible and be the same size as the valve discharge connection throughout its entire length. Drain line shall pitch downward from the valve and terminate at least 6 in. (150 mm) above the floor drain where any discharge will be clearly visible. The drain line shall terminate plain, not threaded, of material serviceable for 120 °C, or greater. Excessive length (over 15 in. (4m)) or use of more than two elbows can cause a restriction of flows and reduce the discharge

 © UNBS 2009 – All rights reserved

capacity of the valve. Shut-off valves shall not be installed between the relief valve and tank, or in the drain line.

17.2.8 All pressurized storage tanks shall be capable of withstanding a hydrostatic test pressure in accordance with accepted criteria applicable to the usage and maximum working pressures recommended by the manufacturer.

17.2.9 All piping materials used in interconnections shall be capable of withstanding the temperatures and pressures anticipated in the system.

17.2.10 In the event that temperature of the stored potable water is not limited to 60 °C, a mixing valve shall be provided to limit the water for personal use to not more than 60 °C. Maximum water temperature shall be in conformance with local codes.

17.3 Contamination of potable water supplies

17.3.1 Double wall heat exchangers should be provided with means to detect leakage through one of the walls (see 11.6.2).

17.3.2 Materials that come into direct physical contact with the potable water shall be acceptable for that use under the applicable codes.

17.3.3 No direct connection between the potable water supply and a non-potable piping system shall be allowed, unless separated by an approved backflow preventer.

17.3.4 Each system shall be clearly and permanently marked near the filling port(s) with a label specifying the fluids approved by the designer or manufacturer for use in the system.

17.4 Falling or flying objects

17.4.1 Collectors employing glass in their construction should be located so that in the event of glass breakage by any cause, glass fragments will not create an undue safety hazard.

17.4.2 Collectors should be located in such a way to minimize melting snow from sliding onto walkways or driveways.

17.5 Electrical hazards

Electrical equipment shall conform to the requirements of the applicable electrical code. Electrical equipment and wiring shall not be located in spaces having temperatures higher than the thermal rating of the wire or equipment.

17.6 Fire Hazards

17.6.1 Solar collector system

17.6.1.1 Assemblies and materials used in the SDHW system shall comply with the requirements of the applicable codes for fire safety under all anticipated operating and no-flow conditions.

17.6.1.2 Solar collectors shall be constructed and installed in such a way that any nearby or adjacent combustible material shall not be heated to temperatures in excess of 90 °C during periods of maximum temperature under no-flow conditions. Wood structural components should be protected from prolonged exposure to temperatures over 65 °C.

17.6.2 Heat transfer fluids—Liquid flash point

The flash point of a liquid heat transfer fluid shall equal or exceed the higher temperature determined from: *(A)* a temperature of 28 °C above the design maximum flow temperature of the heat transfer fluid in the solar system, and *(B)* the design maximum no-flow temperature of the fluid.

© UNBS 2009 – All rights reserved

17.6.2.1 Exception

When the collector manifold assembly is located outside of the building and exposed to the weather, and provided that the relief valves located adjacent to the collector or collector manifold do not discharge directly or indirectly into the building and such discharge is directed away from flames and ignition sources, only *A* applies.

17.6.3 Insulating materials

Materials used for insulating piping and storage tanks shall be of a fire resistance as specified in the local codes and appropriate to the location and use.

© UNBS 2009 – All rights reserved

Annex A

Maintenance of weather-tightness

When considering the design of flashings and seals around joints between the roof or wall and the collector, fixings or pipework, it is necessary to consider the effects of driving rain and snow.

For low pitched roofs in particular, where high speed airflows up the roof slope can be expected, rainwater can be blown upwards through lapped joints. The design of pitched roofing components (slates, tiles, shingles, etc.) takes this into account in both design and practice. If rain or snow can be driven up between a collector and a roof, all joints in the roof should be made weather-tight, even if sheltered from direct rainfall.

The severity of driving rain varies widely over the country and depends on the exposure of the site. Care should therefore be taken in applying experience gained in one area to another. It is important to understand the functions performed by an underlay. This is placed under slates or tiles to prevent powdery snow being blown into the loft, and to carry away temporary accumulation of water under the slates or tiles due to melting snow; it also reduces the air flow through the laps and any consequent risk of rain penetration. Lastly, it reduces the wind uplift on the slates or tiles.

It is important that any holes made in the underlay whilst fixing a solar collector are made good so that the underlay can still perform these functions. The underlay will receive considerable wind forces which all joints should be able to resist.

© UNBS 2009 – All rights reserved

Annex B

Loads on collectors

B.1 Introduction

Collectors and their fixtures have to be designed with due consideration given to the magnitudes, directions and lines of action of forces applied to the collector. These forces comprise dead and imposed loads (due to the weight of the collector and of snow lying on it) and loads due to the wind.

In determining the design case for fixings, it should be assumed that the dead and snow loads can act together, and that the dead and wind loads can act together, but not all three simultaneously. This is because the highest accumulation of snow is not likely to occur when the wind speed is also at its highest.

The loads applied to the collector vary with the location and orientation of the roof and how the collector is mounted on it. Reference should be made to the relevant standards for the determination of wind and snow loading (see B.3.2 and B.4.1) when an installation is being designed for a particular location. It will be usual for a collector and its fixings to be designed so as to be safe for use in given situations (for example, on specified types of roof) throughout particular regions of the country. The designer will thus have to examine a number of possible situations, in order to determine the maximum combination of loads likely to be encountered, which defines the design case. For this purpose it will be found convenient for the various forces to be resolved into components, normal to the plane of the roof and parallel to it. In this annex, methods are given for calculating the highest values of the various forces and their components likely to be encountered in some common situations. These will provide general guidance to designers on the magnitude of the forces involved and on the use of the relevant standards when other cases are being considered.

B.2 General

Methods are given here for determining the maximum values of the components of dead, imposed and wind loads on collectors mounted in various ways on typical roofs having pitches in the range 20° to 45°. It is assumed that the collector has a simple box-like shape and is mounted not closer than a metre to the edges of the roof or to projections such as parapets, chimneys and dormer windows. When an installation in those regions is contemplated, or the collector has a more complex shape, specialist advice should be obtained, since the loads could be greater than those indicated here. The components into which the forces are resolved for present purposes and the directions taken to be positive are defined and illustrated in Figure B.1. Loads are related to presented areas of the collector box shown in Figure B.1 and defined as follows:

- area of the top surface of the box A_t,
- area of exposed side of the box A_s;
- area of exposed end of the box A_e.

B.3 Dead and imposed loads

B.3.1 Dead load

Dead load is due to the weight W of the collector and its fluid contents.

The components P_X, normal, and P_Y, parallel, to the roof plane are respectively $W\cos\alpha$ and $W\sin\alpha$. For roof pitches in the range 20° to 45°, the maximum values of the load components are as given in Table B.1.

 © UNBS 2009 – All rights reserved

Table B.1 – Maximum dead load components for roof pitches in the range 20° to 45°

P_X	P_Y	P_Z
0.94 W	0.71 W	0

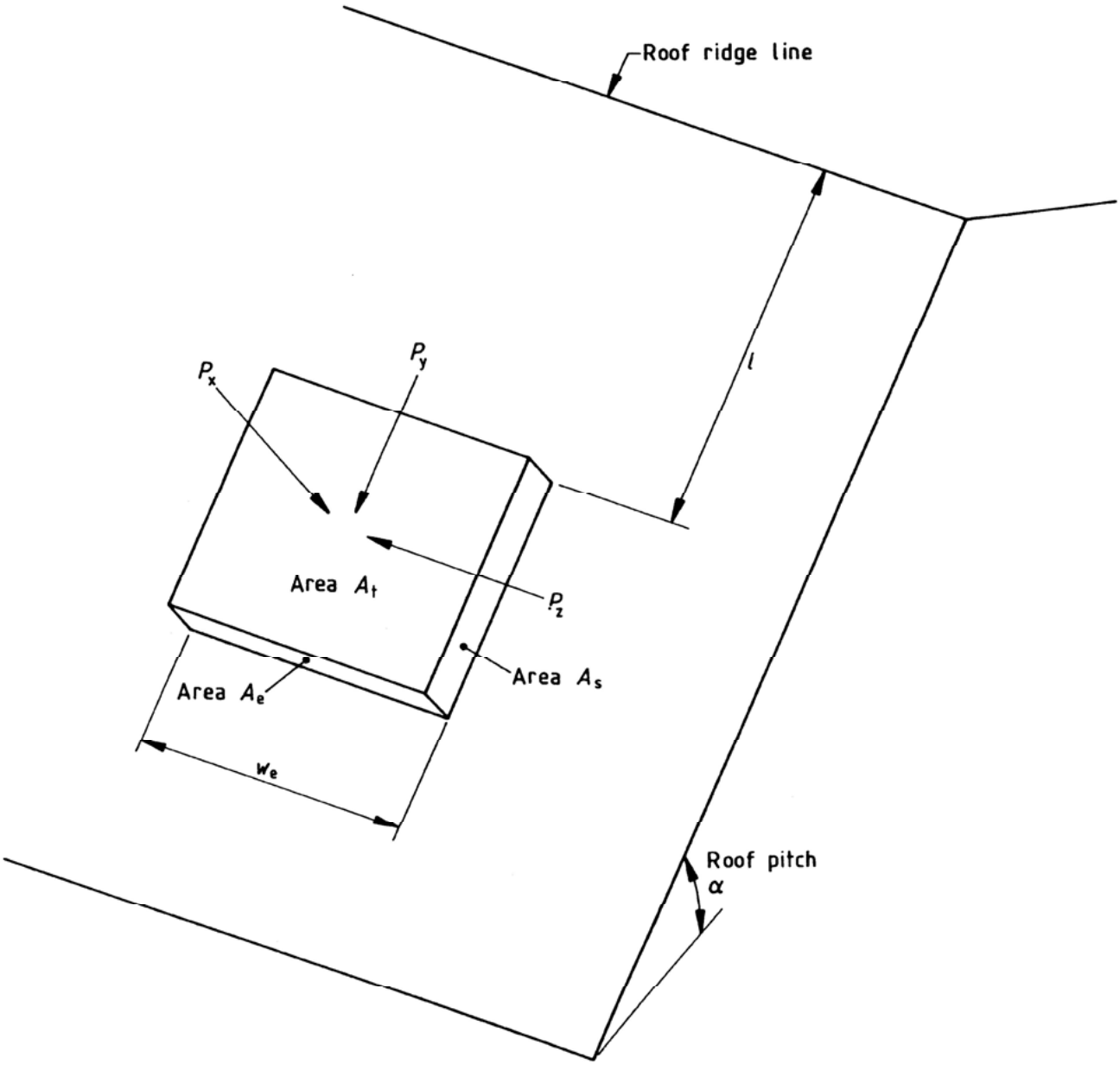

Figure B.1 – Components of force in a solar collector

B.3.2 Imposed loads

Snow loads are related to a characteristic value of the snow load on the ground s_0 determined in accordance with ISO 12494. The designer needs to select a value of S_0 based on a judgement of possible locations for the collector. The load on an exposed object, such as a solar collector, is expressed in terms of one or more shape coefficients μ, which give the intensity of the loads s_d on a particular surface as a fraction of the basic snow load:

© UNBS 2009 – All rights reserved

$s_d = \mu s_o$

Values of shape coefficient are given in ISO 12494. The snow load is assumed to act vertically and to be the product of the intensity and the area of the horizontal projection of the surface. For a collector of upper surface area A_t, the projected area is $A_t \cos\alpha$, so that the components normal and parallel to the roof plane are respectively $\mu s_0 . A_t \cos^2\alpha$ and $\mu s_o . A_t \cos\alpha \sin\alpha$. The shape coefficient μ is a function of roof pitch. For roof pitches in the range 20° to 45°, the maximum values of the components are as given in Table B.2.

Tale B.2 – Maximum snow load components for roof pitches in the range 20° to 45°

Roof type		P_X	P_Y		P_Z
			Lying snow	Sliding snow	
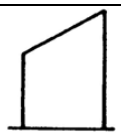	Mono-pitch roof	0.71soAt	$0.35 s_o A_t$	$o.35 s_o w_e l$	0
	Duo-pitch roof	$0.90 s_o A_t$	$0.52 s_o A_t$	$0.52 s_o w_e l$	0

Included in the parallel component is an allowance for the load applied by the sliding of snow which has accumulated on the part of the roof between the ridge and the top edge of the collector. For this component, it is assumed that the load will be increased as if the area of the upper surface of the collector had been increased by $w_e \times l$, where we is the width of the collector and l the distance to the ridge of the roof (see Figure B.1). Table B.2 gives the load due to sliding snow. It should be included in the load calculations if the collector projects more than 50 mm above the plane of the roof.

B.4 Wind load

B.4.1 Determination of wind loads

Wind loads are related to the dynamic pressure of the wind q, determined in accordance with ISO 4354. In the procedure given in ISO 4354 for determining q for a particular case, the value taken for the factor S_1, should be that for class A at a height equal to that of the collector, and S_3 should be taken to be equal to 1.0.

The load on an object exposed to the wind, such as a solar collector, is expressed in terms of one or more pressure coefficients, C_p, which gives the pressure p on a particular surface as a fraction of the dynamic pressure of the wind q as shown by the following equation:

$p = C_P q$

Pressure coefficients vary with the shape and location of the surface concerned and the direction of the wind relative to it. They are convenient because they do not vary much with wind speed; that variation is expressed in q. The resultant normal force on a solar collector is determined by the difference of the pressure on the bottom and top surfaces. These pressures may be expressed separately by appropriate coefficients. If the collector is mounted within a roof so that its top surface does not project much above it, the coefficients may be obtained from ISO 4354.

A difference in pressure between the top and bottom surfaces of a collector produces a load which is uniformly distributed. When the collector projects above the plane of the roof, flow separations produce additional loads which can be approximated by a localized normal load with a line of action through the centre of the upstream edge of the collector and a drag load in the direction of the wind across the roof, through the

centre of the upstream face of the collector. For the purposes of design, it should be assumed that the wind may blow in any direction across the roof, so that any edge of the collector could be the upstream one.

 © UNBS 2009 – All rights reserved

B.4.2 Cases considered

In this annex, values of the wind loads are given for three common situations:

a) collectors mounted into the roof, with the top surface in the plane of the roof surface;

b) collectors mounted into the roof, with the top surface projecting above the plane of the roof surface by up to 150 mm;

c) collectors mounted above the roof surface and parallel to it, with a gap of not more than 150 mm between the bottom of the collector and the plane of the roof surface.

Since in different circumstances, the resultant normal component of force on the collector can be either outward or inward, the maximum values likely to be encountered in both directions are required to enable the design case to be determined.

B.4.3 Maximum wind loads

For roof pitches in the range 20° to 45°, the maximum values of the load components are as given in Table B.3. For the normal component P_X, the first column gives expressions for the distributed part of the load and the second column represents the localized load at the upstream edge of the collector, where appropriate.

Table B.3 – Maximum wind components for roof pitches in the range 20o to 45o

	P_X			P_Y	P_Z
	Maximum outward		Maximum inward		
	Distributed	Localized at leading edge	Distributed	Distributed	Distributed
Case (a)	$-1.2qA_t$	0	$+1.0qA_t$	0	0
Case (b)	$-1.5qA_t$	$-3.6qA_e$ (or $-3.6qA_s$)	$+1.0qA_t$	$\pm1.6qA_e$	$\pm1.6qA_s$
Case (c)	$-0.5qA_t$	$-3.6qA_e$ (or $-3.6qA_s$)	$+1.1qA_t$	$\pm3.0qA_e$	$\pm3.0qA_s$

B.5 Free-standing collectors

A free-standing collector is one mounted on a framework above the roof and inclined at amounted on a frame work above the roof and inclined at an angle different from the roof pitch. Less information is available on the loads experienced by free-standing collectors, but for design purposes, the following maximum values are recommended:

a) dead load: *W*, applied vertically;
b) imposed (snow) load: $0.3s_oA$t, applied vertically;
c) wind load ±3.0*qA*t, applied normal to the plane of the collector; and
±3.0*qA*e (or 3.0*qA*s (3.0*qA*s), applied parallel to the plane of the collector through any edge.

Free-standing collectors mounted on flat roofs or on the ground are not subjected to the accelerated air flow produced by a pitched roof. For those cases, the loads are similar to those experienced by monopitch canopy roofs, which may be obtained by reference to the pressure coefficients given in of ISO 12494.

B.6 Worked example of load calculation

Fixings are to be designed for a collector with overall dimensions 1.5 m long × 1 m wide × 0.15 m deep and mass 45 kg when full of fluid. The collector will be a standard type for installations on roofs with pitches between 20° and 45° anywhere up to an altitude of 200 m without undue exposure to wind. The long dimension of the collector will lie up the roof slope. The worked example is as follows:

a) Collector properties

From the data given:

© UNBS 2009 – All rights reserved

w_e = 1 m,
A_t = 1.5 m^2, A_s = 0.23 m^2, A_e = 0.15 m^2, W = 441 N.

b) Dead load

From the Table 4 the maximum dead load components are:

P_X = 415 N, P_Y = 313 N, P_Z = 0

c) Snow load

From ISO 12494, the maximum characteristic value of now load is:

s_o = 800 + 160 = 690 N/m^2

From Table B.2 the maximum snow load components are:

P_X = 1296 N, P_Y = 749 N (lying snow) + 1498 N (sliding snow), = 2247N,

P_Z = 0
(i is assumed here to be 3 m).

d) Wind load

From ISO 12494, the design wind speed is 48m/s (S_1 = 1.0, S3 = 1.0) giving q = 1410 m^2

From Table B.3, case c), the maximum wind load components are:

P_X (distributed) = -1058 N (outward); 2327 N (inward);

P_X (at upper/lower edge) = -1167 (side); -761 N (upper/lower edge)

P_Y = ±635 N; P_Z = ±973 N

e) Load combination

Since loads determined under (b) and (c) or under (b) and (d) can act together, the worst cases for the design of fixings are:

P_X: 2742 N (inward); -643 N (outward), with -1167 N (at either side) or -761 N (at upper or lower edge);

P_Y: 2560 N (down roof plane); -322 N (up roof plane);

P_Z: ±973 N (across roof plane)

B.7 Effects of the roof structure

The loads applied to the collector fixings are normally transmitted to the roof structure. Traditional roof construction may have larger safety factors than those of modern trussed rafter roofs, where additional loading may be critical. The applied loads not only increase the magnitude of forces in the members of the trussed, but by being applied asymmetrically, may cause a member or joint designed for compression to be put in tension (or vice versa). It may be necessary to strengthen timber members and joints and/or to provide additional members to distribute the loads more widely among the rafters. It is often necessary also to support an additional water tank in the loft space. The additional load may be troublesome, especially where there are no internal load-bearing walls. Modifications to the roof structure may then be necessary.

 © UNBS 2009 – All rights reserved

Annex C

Condensation and ventilation in roof spaces

If the solar collectors are fixed to roofs with metal straps or bolts that pass through the tiles, it is possible that condensation may form on these fixings since they may be at a lower temperature than the air in the roof space. Excessive condensation could result in decay of the timbers to which the straps or bolts are attached, and if persistent dripping occurred this could lead eventually to dampness of the ceilings. Whether condensation is likely to occur depends essentially upon three factors: the amount of thermal insulation in the loft space, the amount of air leakage from the inhabited space of the house into the loft space, and the amount of ventilation in the loft space. If the thermal insulation is situated on top of, and between, the ceiling beams, and if it is of sufficient thickness, then the loft space will rarely be significantly warmer than the fixing straps and there is, consequently, little increased risk of condensation occurring.

If there is excessive air leakage from the inhabited space into the loft, this will result in excessive amounts of moist warm air entering the loft and the risk of condensation occurring is high (even in the absence of solar collectors' fixing bolts); such leakage should be minimized. An adequate amount of ventilation of loft spaces is necessary in order to prevent decay of timber, and this is especially important near the eaves, where dampness may eventually give rise to timber decay while the rest of the roof remains sound. If the natural ventilation rate is sufficient to prevent any condensation in the absence of solar collectors, it is unlikely that the addition of these units will cause problems. Condensation on cold pipework may be prevented by insulation.

Where a vapour barrier has been installed, care should be taken to maintain its integrity, ISO 5268-2 gives further information.

© UNBS 2009 – All rights reserved

Annex D

Method for calculating the thermal performance

D.1 Introduction

The method used to calculate the annual solar energy supplied by the system is applied through the information given in D.2. Then the equations shown in D.3 are used to calculate the collector area parameter *M*, the collector type parameter K and the storage parameter *R*. These three parameters are used, as shown in D.4, to obtain the solar energy supplied *Q*.

D.2 Collection of basic information

The sequence for collection of basic information is as follows.

a) From climatical maps, estimate the annual mean daily irradiation on a horizontal surface at the site of interest, *H* (in MJ/m^2).

b) From rainfall maps, estimate the annual mean air temperature *T* (in °C) at the site of interest.

c) For the particular site, estimate the annual mean daytime air temperature, T_a (in °C), and the annual mean cold water supply temperature T_c (in °C). If no data are available on these, assume that they are given respectively by the following equations:

$T_a = T + 1$;

$T_c = T + 2$;

d) Knowing the orientation and tilt of the collectors, use Figures D.1 and D.2 to estimate the orientation factors C_h and C_g respectively.

e) From the collector specification, obtain its performance parameters *U* (collector heat loss coefficient, in W/(m^2-K) and η_0 (zero-loss collector efficiency).

f) Either specify the effective area *A*' (in m^2) of the collector, or obtain it from the specified aperture area *A* (in m^2), using the equation:

$A' = \eta_0 A$

g) Estimate the daily mean hot water requirement *V* (in L/day) and specify the desired hot water draw-off temperature T_d (in °C).

h) From the system specification, obtain the volume V_s (in L) of the preheat vessel.

 © UNBS 2009 – All rights reserved

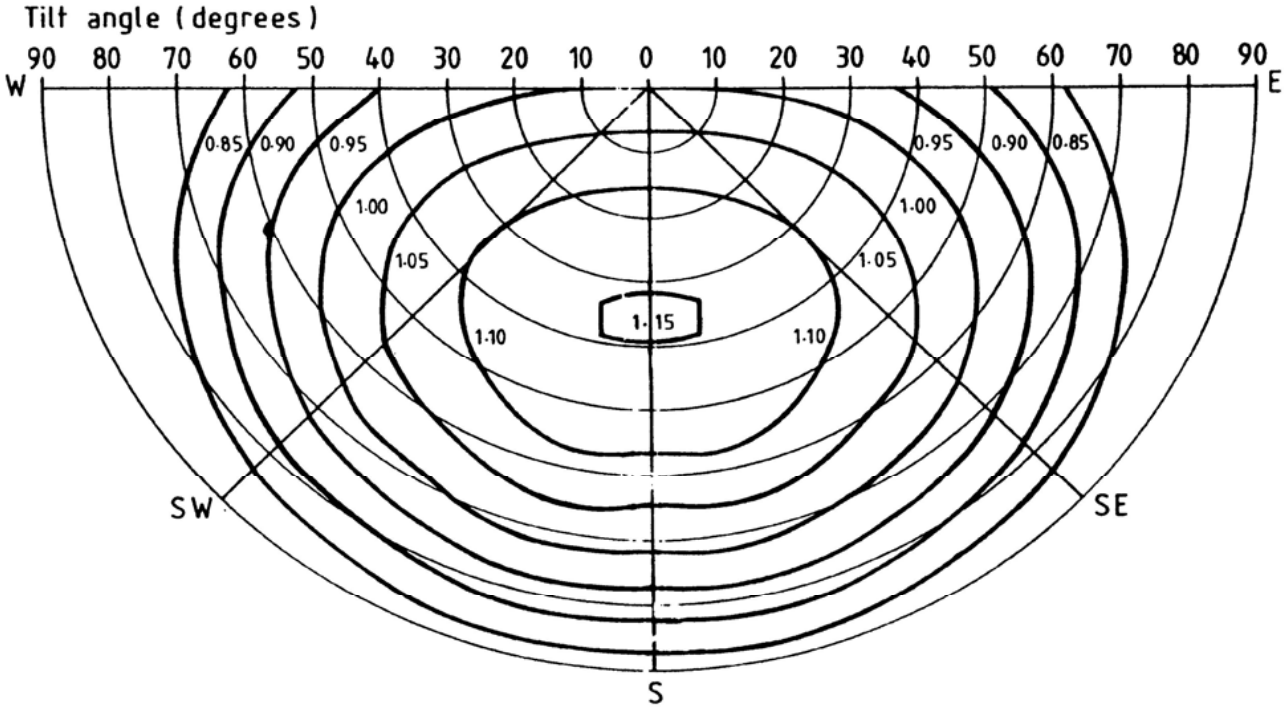

Figure D.1 – Orientation factor Ch for irradiation

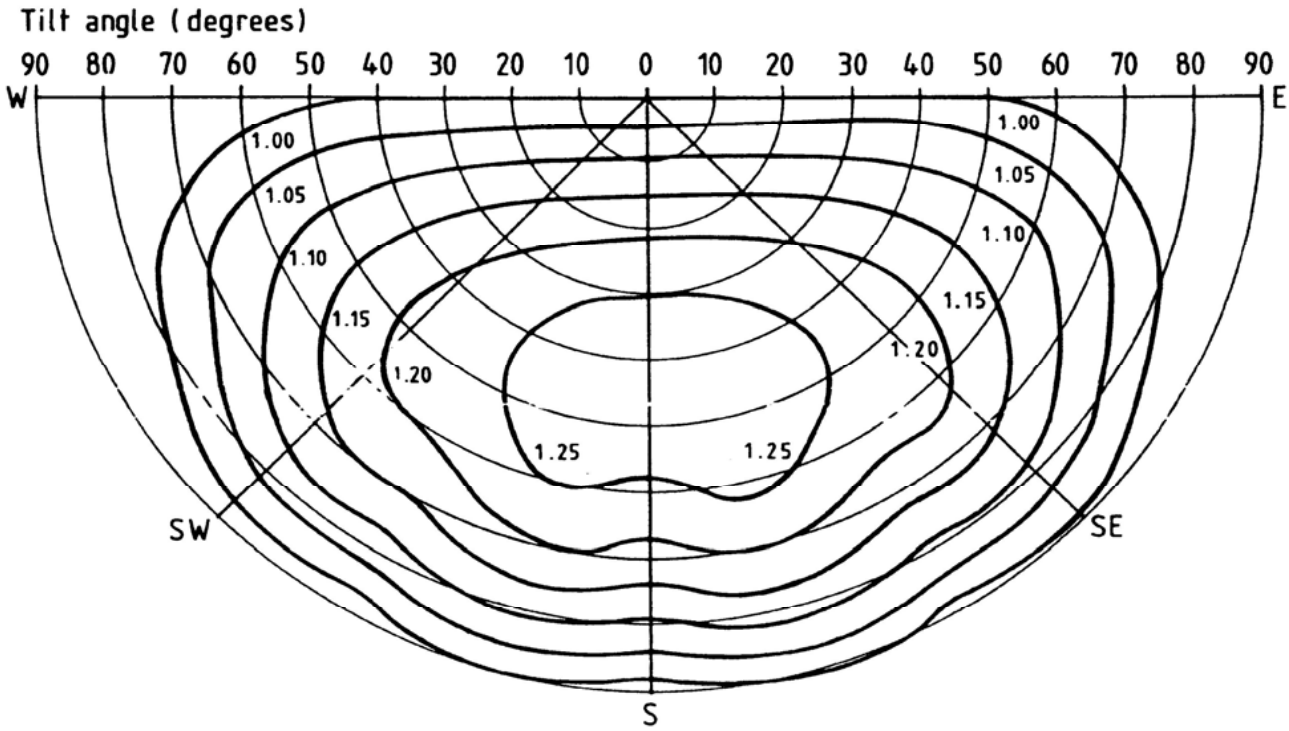

Figure D.2 – Orientation factor Cg for pea irradiance

D.3 Calculation of parameters *M*, *K* and *R*

Substitution of the values of the quantities obtained in D.2 into the following equations will provide the values of *M*, *K* and *R*:

© UNBS 2009 – All rights reserved

$$M = \frac{A'}{L}\left[HC_h + 0.0432\frac{U}{\eta_0}(T_a - T_c)\right]$$

$$K = \frac{U}{\eta_0}\frac{(T_d - T_c)}{\left[GC_g + \frac{U}{\eta_0}(T_a - T_c)\right]}$$

$$R = \frac{V_s}{V}$$

Where

L = 0.00418.V (T_a-T_c)

G = 40H

D.4 Estimation of the annual solar energy supplied *Q*

Two methods for estimating the annual solar energy supplied, *Q*, are as follows.

a) Graphical method

Use Figure D.3 with the calculated values of *M* and *K* to estimate the value of the parameter *E*. Use Figure D.4 with the calculated values of *R* and *K* to estimate the value of the parameter C_R.

Then *Q* is given (in MJ/year) by the equation:

$Q = 365EC_RL$

NOTE If *R* is less than 0.8, the energy supplied may be greater than *Q*, if the hot water is drawn off predominantly during hours of sunlight. In favourable cases it may be as great as that obtained with the assumption that C_R equals 1.

b) Numerical method

Substitute the calculated values of *K* and *R* into the following equations to obtain the values of the parameters *F*, *B* and λ.

$F = 0.554 + 0.342R - 0.097R^2$

$B = 0.383K - 0.066K^2$

$\lambda = 1.121 + 0.212/0$ for $K < 1$, or

$\lambda = 0.71\ (1 + K)$, for $K > 1$

Then *Q* is given (in MJ/year) by the equation:

$Q = 365L\ (F - B)\ [1 - \exp(-\lambda M)]$

NOTE If fl is less than 0.8, the energy supplied may be greater than *Q*, if the hot water is drawn off predominantly during hours of daylight. In favourable cases it may be as great as that calculated with the assumption that *F* is equal to 0.8.

 © UNBS 2009 – All rights reserved

D.5 References

[1] A parametric study of open loop solar heating systems, J.P. Kenna, Solar Energy, 32, 1984, 687-706.

[2] Meteorological Office tables for H.

[3] Meteorological Office tables for T_a

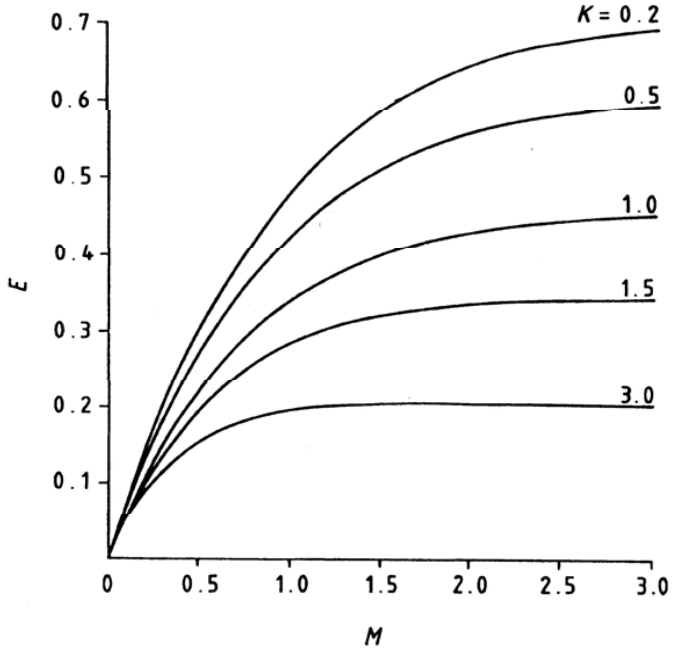

Figure D.3 – Graphical estimation of parameter f from calculated values of the collector area parameter *M* and the collector type parameter K

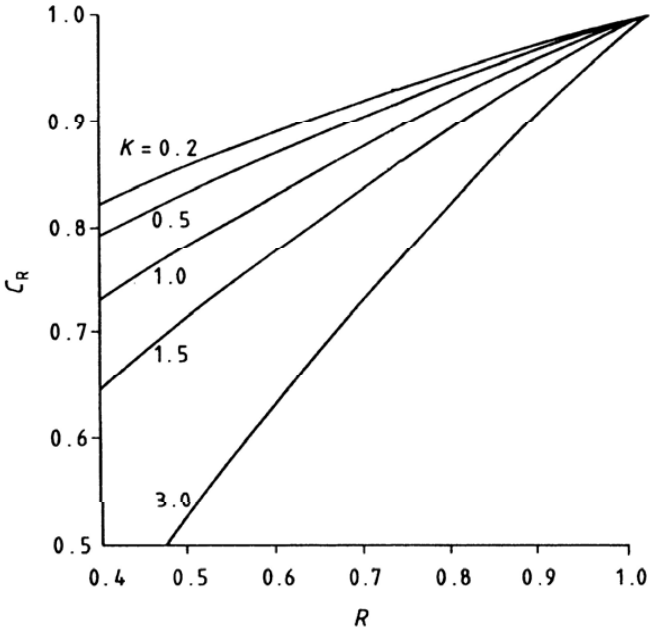

Figure D.4 – Graphical estimation of parameter C_R from calculated values of the storage parameter R and the collector type parameter K

© UNBS 2009 – All rights reserved

Annex E

Methods of pressure and leak testing of absorber plates

E.1 General

Manufacturers of absorber plates for solar heating systems are required to perform a type test for pressure (see E.2.1) on each design or modification, and a leak test (see E.3) on each absorber plate.

E.2 Pressure test

E.2.1 Pressure test (at elevated temperature)

A hydraulic test pressure of 1.25 × the maximum working pressure (see the note) is applied to the absorber plate when it is at the maximum temperature to which it is liable to be subjected when working at maximum pressure in a solar heating system.

NOTE Maximum working pressure means the maximum pressure to which the absorber plate is liable to be subjected in service. For example:

a) the pressure which will exist in the absorber plate installed in a system when the pressure-relieving device starts to relieve, or the set pressure of the pressure-relieving device, whichever is higher; or

b) the maximum pressure which can be attained in the absorber plate in service, where this pressure is not limited by a relieving device.

The test is carried out using either aqueous or non-aqueous heat transfer fluid, as appropriate, and with the temperature of the fluid stabilized with that of the absorber plate. The pressure supply equipment should be fitted with a pressure limiting device, e.g. a reducing valve with pressure gauge, or other device for preventing a pressure higher than that selected being applied.

E.2.2 Hydraulic tests

Manufacturers will be required to perform a hydraulic pressure test at ambient temperature and at twice the maximum working pressure as declared by the manufacturer in order to satisfy the pressure test requirements of the water byelaws in respect of fittings which may be located in positions to which access is difficult (see 4.4).

E.3 Leak test

A test for leaks should be effected by means of a low pressure pneumatic test at an internal pressure of not more than 0.5 bar above atmospheric pressure. The test is made at ambient temperature, with the absorber plate submerged under fluid in a suitable tank. In the course of the test, all surfaces of the absorber plate need to be visible in turn to the operator.

 © UNBS 2009 – All rights reserved

Annex F

Methods of type testing for collectors

F.1 General

The type tests described in F.2 to F.4 are for assessing the resistance of collectors to adverse conditions, including extreme weather conditions.

The tests are intended to identify weak design features rapidly without the need to wait for adverse conditions to occur in service.

F.2 High temperature test

The empty collector is mounted at an inclination of between 20° and 60° to the horizontal and subjected to solar or simulated solar irradiance at a level sufficient to raise the temperature of the absorber plate to the relevant temperature indicated in 6.1.

This temperature should be maintained for not less than 4 h. By stripping and inspecting the collector components, checks are made for distortion, cracking or other failures.

F.3 Thermal shock test

The empty collector is brought to the high temperature as described in F.2. This temperature should be maintained for not less than 1 h. Water or other heat transfer fluid at a temperature of 10 ± 5 °C is then introduced into the collector fluid inlet at a rate of approximately 0.02 kg/s per square metre of collector area. Care should be taken to allow the safe venting of any vapour produced. The flow is maintained for about 5 min after the collector has been filled.

By stripping and inspecting the collector components, checks are made for distortion, cracking or other failures.

F.4 Water ingress test

The purpose of this test is to identify whether or not the collector is able to withstand heavy rainfall conditions; it will not demonstrate resistance to driving rain. The empty collector is mounted at angles of 20° and 60° to the horizontal and subjected to a vertical water spray for a period of about 5 min. The total water flow rate is approximately 0.06 kg/s per square metre of collector area and this is produced by an array of water jets placed above the collector.

The spray nozzles should produce a droplet velocity of approximately 7 m/s to simulate impact spray, and the water should be spread evenly over the collector aperture. The collector is inspected for ingress of water.

© UNBS 2009 – All rights reserved

Annex G

Methods of testing for differential temperature control systems

G.1 General

In these tests, the complete differential temperature control system comprising the controller, the sensors, the mounting, the inter-connecting wiring and all other items, is tested for performance.

G.2 Apparatus

G.2.1 Test chamber, suitable for enclosing the controller is required. The chamber is substantially sealed during testing and is fitted with means for heating and cooling to enable the relevant temperatures (see Table G.1) to be maintained, and with temperature measuring devices having an accuracy of at least ±2 °C.

NOTE For reasons of economy it may be desirable to place a number of controllers simultaneously in the test chamber for testing.

Table G.1 – Test Temperature ranges

Temperature range (in ^{o}C)	Examples of conditions of service
-15 to 45	Components mounted externally (i.e. open air mounting) or components mounted inside a loft space, e.g. controllers
-15 to 35	Components mounted inside the heated space of a house, e.g. controllers
-15 to 200	Components mounted in contact with a selectively coated absorber plate, e.g. collector temperature sensors
	Components mounted in contact with a non-selectively coated absorber plate, e.g. collector temperature sensors
-15 to 150 5 to 100	Components mounted in contact with any part of a domestic hot water system, e.g. store temperature sensors

G.2.2 Two temperature, controlled baths, one for simulating the solar store temperature, and the other for simulating the absorber plate temperature. Thermometers having an accuracy of at least ± 0.05 °C, and a means of heating and cooling the temperature controlled baths are required together with a control device to ensure that reference temperatures can be held stable to ±0.1 °C.

G.2.3 Simulated electrical load, consisting of a means of simulating the loads to be switched by the controller, e.g. a variable inductor and/or a variable resistor.

G.3 Test procedures

G.3.1 Setting up apparatus and components for test

The controller is adjusted in accordance with the manufacturer's instructions. If 'user' adjustments are available for the temperature differential settings, these are set to the minimum temperature difference positions. The controller is installed in the test chamber, and the temperature sensors are installed in their respective temperature controlled baths.

The electrical load is connected to the controller and adjusted to the maximum load rating declared by the manufacturer.

 © UNBS 2009 – All rights reserved

G.3.2 Collector sensor maximum temperature check

A check is carried out for approximately 15 min with the store sensor at about 30 °C and the collector sensor at 150 °C or 200 °C, depending on its maximum temperature specification. This is to ensure that the controller can accommodate the sensor signal under collector stagnation conditions, and that the resistance to temperature of the sensor and its leads is adequate.

G.3.3 Switching tests

A sequence of switching tests is made for each of three controller temperatures, e.g. 15 °C, 20 °C and 45 °C. The controller should be allowed about 30 min to reach equilibrium prior to each testing sequence with its power supply ON in order to ensure that any self-heating is taken into account.

A typical switching test begins with the controller in its OFF condition and with both sensors at low temperature, e.g. 5 °C.

The collector sensor is then slowly raised in temperature until the controller switches to the ON condition. The temperature at which this occurs is recorded, and the sensor is stabilized at a new temperature slightly above the switching temperature.

The store sensor is then slowly raised in temperature until the controller switches to the OFF condition again. This temperature is recorded, and the sensor temperature stabilized.

This procedure of raising the temperature of each sensor in turn is repeated to give at least five recordings of switching OFF events spaced over the range of store temperatures between 5 °C and 80 °C.

NOTE 1 Before performing switching tests, a check should be made to ensure that switching of the temperature controlled baths does not affect the performance of the controller.

NOTE 2 When testing controllers which employ a time delay circuit, sufficient time should be allowed to elapse between switching tests to ensure that the results are not affected by the time delay.

The results for each controller temperature can be recorded in the form of tables showing the temperature at which switching took place, or graphically as shown in Figure G.1.

G.3.4 Mains voltage sensitivity check

With the store sensor at about 30 °C, the switch-on and switch-off temperature differentials are measured at the nominal mains voltage (say 230 V), and again at 10 % above and 15 % below the nominal mains voltage.

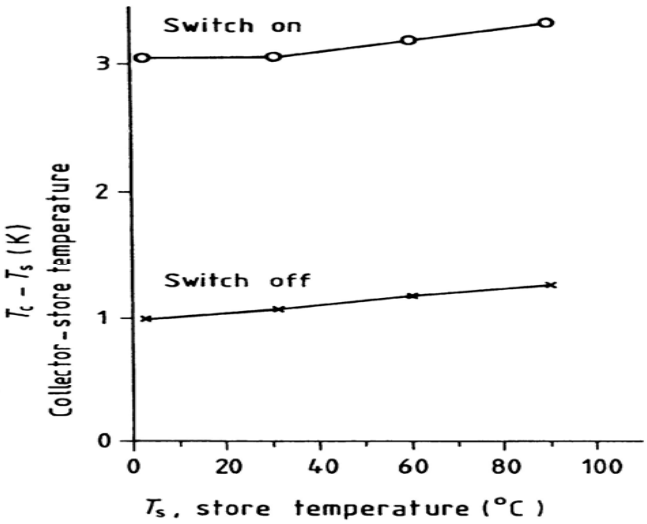

Figure G.1 – Controller operating curves

© UNBS 2009 – All rights reserved

Annex H
(informative)

Solar thermal applications and technologies

A wide variety of applications can benefit from the use of solar technologies. Currently, solar technologies are used for a myriad of applications, including standard water and pool heating as well as space heating, crop drying, cooking, and water distillation, to name but a few.

This annex provides a general overview of the various applications that can benefit from the use of these technologies.

Residential applications

- Domestic hot water
- Swimming pool and spa heating
- Space heating
- Water purification/distillation
- Air Conditioning

Commercial applications

- Hotels
- Schools
- Apartment and condominium complexes
- Recreation areas and campgrounds
- Hospitals/Nursing homes
- Restaurants
- Laundries
- Car washes
- Beverage manufacturing
- Cane sugar refining
- Canning facilities
- Food processing
- Meat packing facilities
- Poultry farms
- Light commercial businesses
- Summer camps
- Recreation areas and campgrounds
- Industrial process heat

Agricultural applications

- Crop drying
- Green houses
- Dairy processing
- Meat processing
- Aqua-culture
- Food processing

 © UNBS 2009 – All rights reserved

Annex I
(informative)

Solar basics

Understanding solar thermal systems requires the knowledge of several energy terms and physical principles. This chapter presents important terms and principles and shows how they apply in solar thermal systems.

Terms and principles

Insolation is the amount of the sun's electromagnetic energy that "falls" on any given object. Simply put, when we are talking about solar radiation, we are referring to insolation. In Florida (at about sea level), an object will receive a maximum of around 950 watts/meter2 at high noon on a horizontal surface under clear skies on June 21 (the day of the summer equinox).

Sun path

On the surface of the earth, insolation varies over time because of the planet's daily rotation, tilted axis and elliptical orbit around the sun. Imagine the sky as a dome (sky dome) with the horizon as its edge. From this perspective, the sun's path describes an arc across the sky from dawn until dusk. This perceived path and its variations over time can be plotted as in Figure I.1, which shows the annual sun path from the perspective of 28 degrees north latitude. This figure illustrates the seasonal changes in the sun's path for a given location. It shows that the winter the sun rises in the Southeast, sets in the Southwest, has a relatively short path and rises to a shallow 39 degree angle above the horizon at noon. In the summertime, the sun rises in the Northeast, sets in the Northwest, has a longer path and rises to a much higher angle above the horizon.

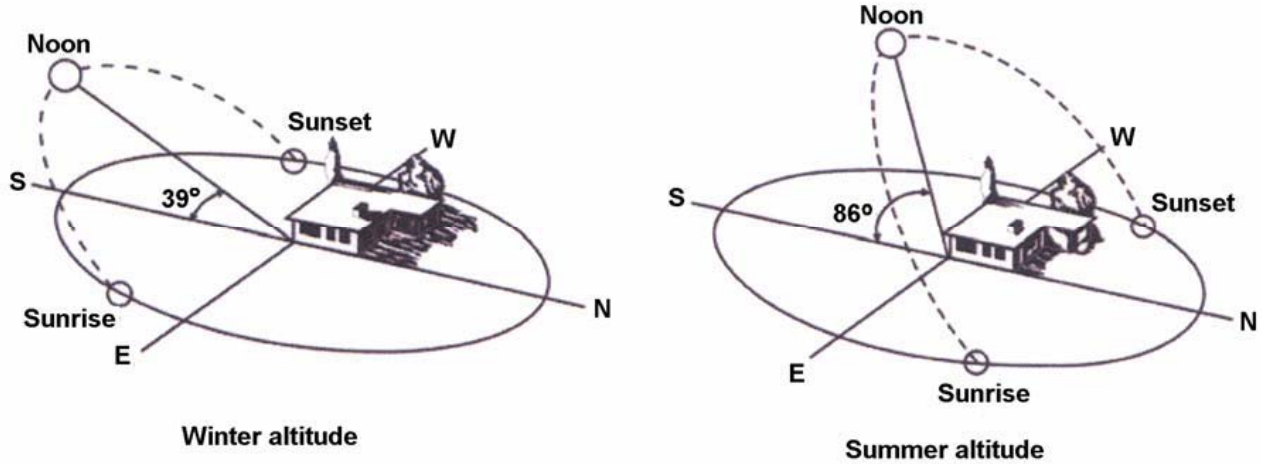

Figure I.1 – Annual sun path for 28oN latitude (Orlando, Florida)

Atmosphere

The atmosphere absorbs certain wavelengths of light more than others. The exact spectral distribution of light reaching the earth's surface depends on how much atmosphere the light passes through, as well as the humidity of the atmosphere. In the morning and evening, the sun is low in the sky and light waves pass through more atmosphere than at noon. The winter sunlight also passes through more atmosphere versus summer. In addition, different latitudes on the earth have different average "thicknesses" of atmosphere that sunlight must penetrate. Figure I.2 illustrates the atmospheric effects on solar energy reaching the earth. Clouds, smoke and dust reflect some solar insolation back up into the atmosphere, allowing less solar energy to fall on a terrestrial object. These conditions also diffuse or scatter the amount of solar energy that does pass through.

© UNBS 2009 – All rights reserved

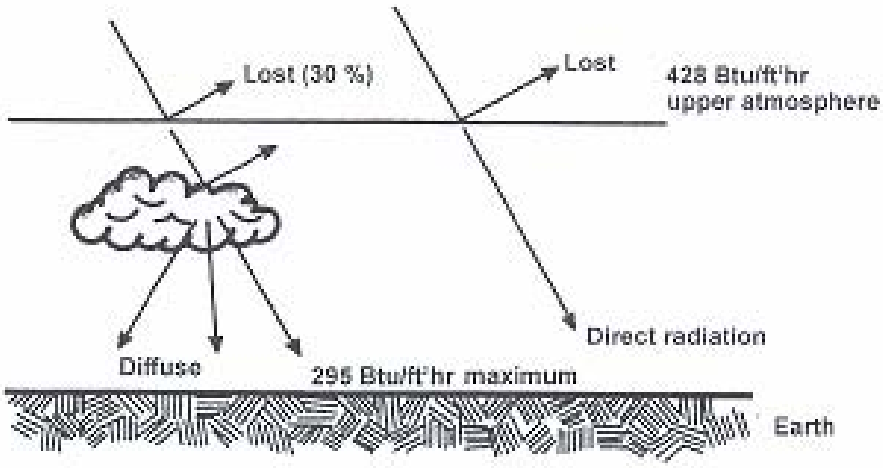

Figure I.2 – Atmospheric effects on the solar energy reaching earth

Angle of incidence

The sun's electromagnetic energy travels in a straight line. The angle at which these rays fall on an object is called the angle of incidence (See Figure I.3). A flat surface receives more solar energy when the angle of incidence is closer to zero (normal, perpendicular) and therefore receives significantly less in early morning and late evening. Because the angle of incidence is so large in the morning and evening on earth, about six hours of "usable" solar energy is available daily. This is called the "solar window."

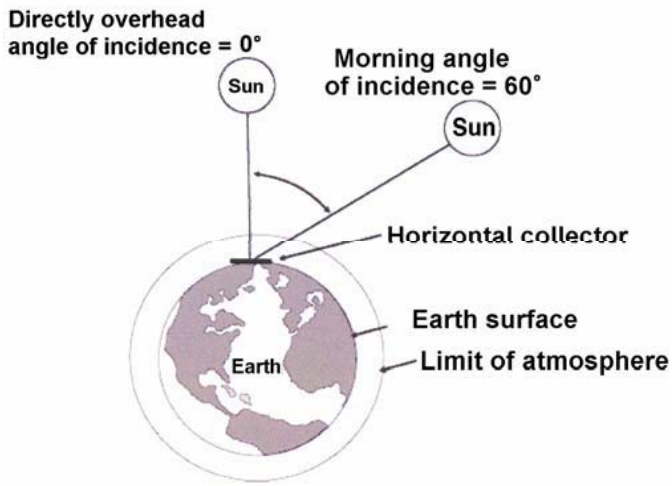

Figure I.3 – Angle of incidence

Absorptance vs. reflectance

Certain materials absorb more insolation than others. More absorptive materials are generally dark with a matte finish, while more-reflective materials are generally lighter colored with a smooth or shiny finish. A golf ball covered with black matte paint placed in sunlight will absorb more solar insolation than a plain white golf ball.

The materials used to absorb the sun's energy are selected for their ability to absorb a high percentage of energy and to reflect a minimum amount of energy. The solar collector's absorber and absorber coating efficiency are determined by the rate of absorption versus the rate of reflectance. This in turn, affects the absorber and absorber coating's ability to retain heat and minimize emissivity and reradiation. High absorptivity and low reflectivity improves the potential for collecting solar energy.

 © UNBS 2009 – All rights reserved

Heat transfer

Because all natural systems seek a balance, heat always moves from warm (more energy) to cool (less energy). Heat moves by three methods: conduction, convection and radiation.

Conduction

Conduction occurs when a solid material is heated. Molecules exposed to a heat source become energized. These energetic molecules collide with neighbouring, less-energetic molecules, transferring their energy. The greater the energy transfer ability of the solid's molecules, the more energy they can transfer and the better the solid's conductivity. Copper has high conductivity while glass has low conductivity. If you place a heat source at the bottom of a copper tube and a glass tube at the same time, the top of the copper tube will become hotter quicker than the top of the glass tube.

Convection

Like conduction, convection occurs by molecular motion but in a fluid (such as a gas or liquid), rather than in a solid. When a gas or liquid is heated, the energized molecules begin to flow. On earth, where gravity is a factor, the heated, less-dense fluid flows upward as cooler, more compact fluid moves down. This process of displacement continues as long as the heat source remains.

Radiation

Radiation occurs not by molecular action but rather by emission of electromagnetic waves, generally in the invisible, infrared spectrum. Because radiation does not rely on the presence of matter (molecules) for transport, it can occur in a vacuum. Just as the sun radiates to the earth, a warm object on earth will radiate infrared waves at night to objects in deep space. All objects with heat radiate to objects with less heat that are in a direct path.

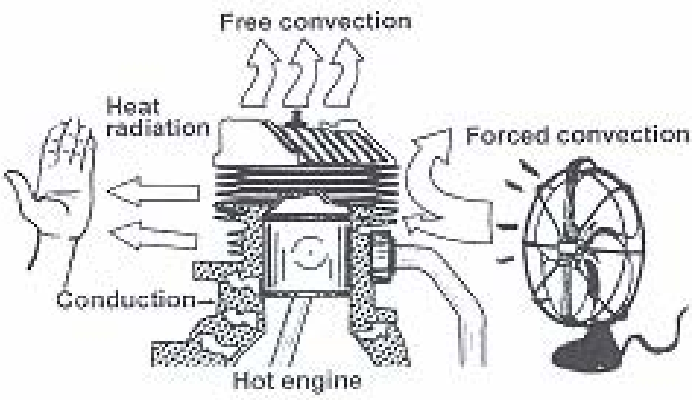

Figure I.4 – Illustration of conduction, convection and radiation

Temperature differential or delta *T* (Δ*T*)

The greater the difference in temperature between two points of an object or between two objects, the greater the driving force to move heat from the warmer to the cooler point. This applies whether the heat transfer method is conduction, convection or radiation. Consider the following examples:

Conduction

Applying a 260 °C heat source to the bottom of a copper tube will make the top of the tube hotter and it will heat faster than if the heat source were at 250 °F.

Convection

A hot air balloon will rise faster if its air is 121 °C rather than at 67 °C.

© UNBS 2009 – All rights reserved

Radiation

A camper sitting before a raging bonfire will feel much warmer than a camper sitting by the fire's glowing embers.

Thermal mass

Thermal mass is the measure of a material's molecules ability to hold thermal energy. The higher the thermal mass, the material's energy capacity, the more efficiently the material can store sensible heat. Rock and masonry are two such materials that have high thermal mass and are solids. Water is a fluid with good energy capacity, making it a good thermal mass medium for energy storage.

Applying the basics

The purpose of a solar heating system is to collect solar energy, convert it to heat, store the heat, and provide the stored heat for an intended purpose. The efficiency of the system depends on how well the solar basics are applied.

Collecting and converting solar energy

Solar collectors capture the sun's electromagnetic energy and convert it to heat energy. The efficiency of a solar collector depends not only on its materials and design but also on its size, orientation and tilt.

Daily variations

Available solar energy is at its maximum at noon, when the sun is at its highest point in its daily arc across the sky. The sun's daily motion across the sky has an impact on any solar collector's efficiency and performance in the following ways.

- Since the angle of incidence of the solar energy — measured from the normal (right angle) surface of the receiving surface — changes throughout the day, solar power is lower at dawn and dusk. In reality, there are only about 6 hours of maximum energy available daily.

- The total energy received by a fixed surface during a given period depends on its orientation and tilt and varies with weather conditions and time of day and season.

Aiming the solar device to track the sun's rays to strike it at right angles (normal) all day seems logical, but solar collectors are large and heavy and must be strong to withstand weather conditions. Tracking the sun requires considerably more hardware than does fixed mounting. Most practical designs accept the loss of energy suffered through fixed mounting and use an orientation close to that which collects the most solar energy possible.

Consequently, fixed solar collectors are best positioned to face true south in the northern hemisphere and true north in the southern hemisphere. If the collector will be unavoidably shaded in the morning when installed at its best solar location, it can be oriented slightly west in the northern hemisphere and slightly east in the southern hemisphere.

Seasonal variations

The dome of the sky and the sun's path at various times of the year are shown in Figure I.5 (note that 28° is about the latitude of Orlando, Florida). The top illustration shows the paths projected on a flat surface. In mid-June the days are long; the sun rises well north of due east and sets well north of due west. It also passes almost directly overhead (86°) so that at solar noon on June 21 a horizontal plate will almost collect a maximum amount of solar energy (see Figure I.6a). But in December, the sun rises later — south of due east — to a noon elevation of less than 40°. It sets early on the west-southwest horizon. So, to get about the most solar power at noon in December, a fixed collector should face south and be tilted up at an angle of about 50° to the horizontal, as shown in Figure I.6b

 © UNBS 2009 – All rights reserved

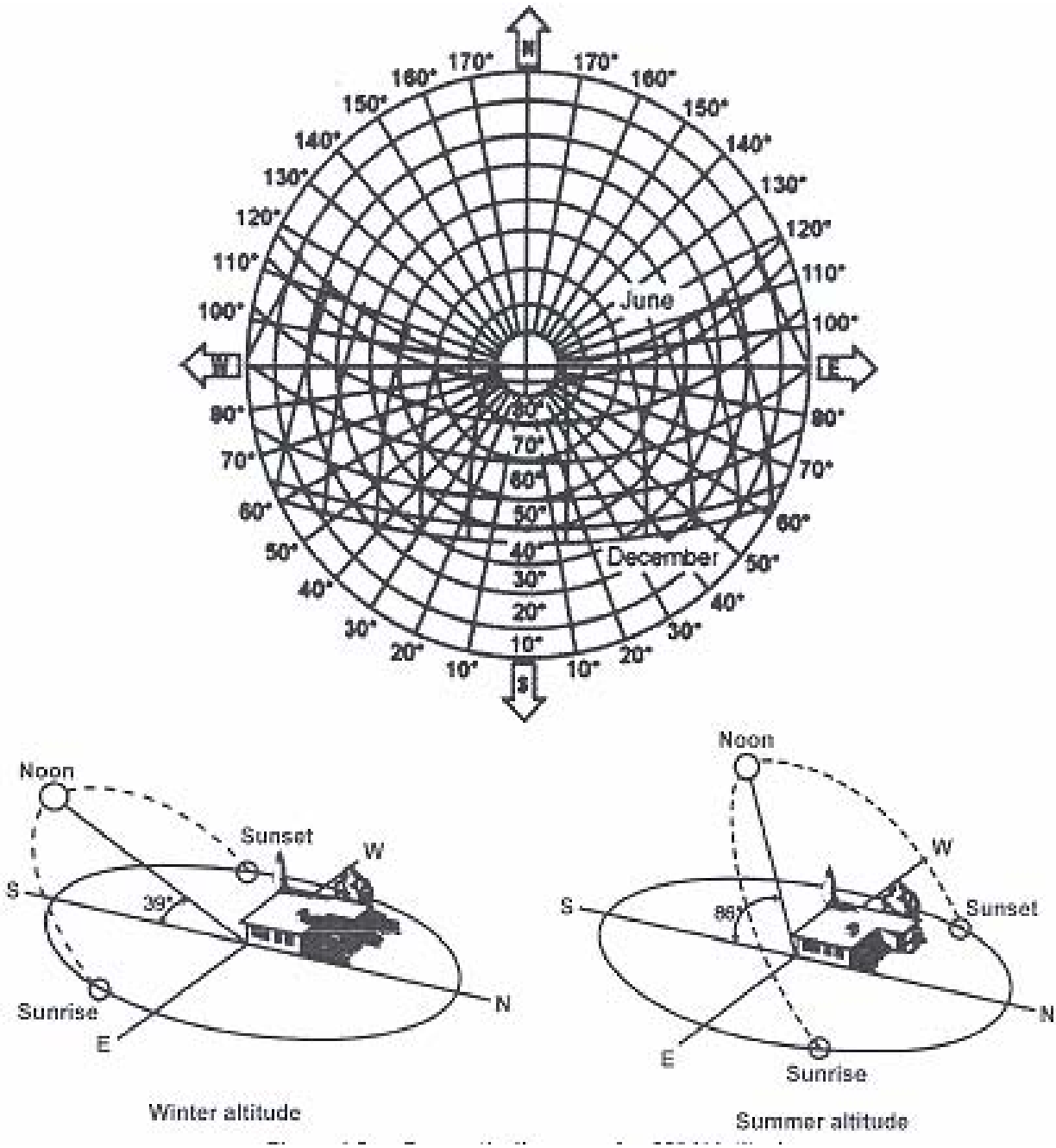

Figure I.5 – Sun path diagrams for 28° N latitude

© UNBS 2009 – All rights reserved

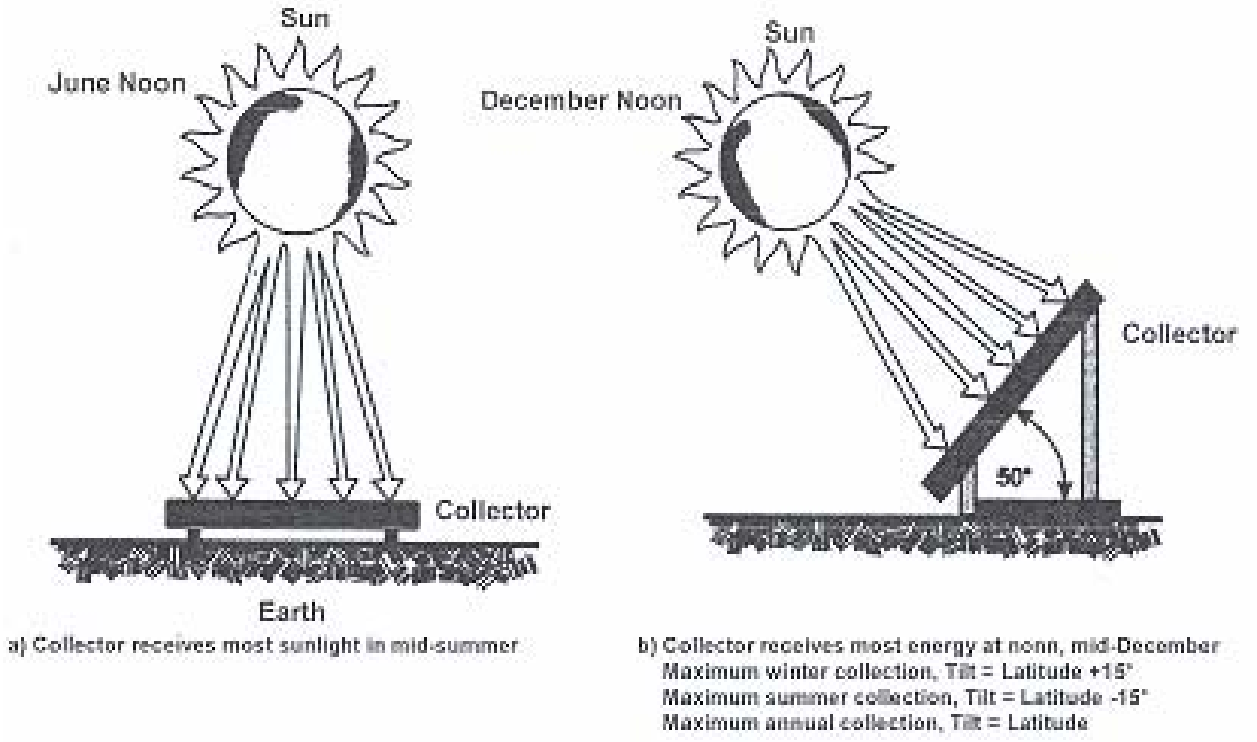

Figure I.6a and I.6b – Collected energy varies with time of year and tilt

For many solar applications, we want maximum annual energy harvest. For others, maximum winter energy (or summer energy) collection is important. To orient the flat-plate collector properly, the application must be considered, since different angles will be "best" for each different application.

Collector orientation

Collectors work best when facing due south. If roof lines or other factors dictate different orientations, a small penalty will be paid, as shown in Figure I.7. As an example: for an orientation 20° east or west of due south, we must increase the collector area to 1.06 times the size needed with due south orientation (dashed line on Figure 7) to achieve the same energy output. The orientation angle away from due south is called the azimuth and, in the Northern Hemisphere, is plus if the collector faces toward the east and minus if toward the west. Correction factors may be used to properly size solar collectors which cannot face due south. Closer to the equator, this can change. The lower the tilt of the collector, the less the direction affects it. A collector at 5-10° tilt is almost flat to the sun. At 5° latitude and at a 5° tilt, the collector could be in any direction.

We have assumed that nothing shades the collector during any part of the day. If tall trees, for example, shade a collector until 10 a.m., an orientation west of south (so that the afternoon sun will provide the bulk of the energy collected each day) would enable maximum solar energy collection. Moving the collector or increasing its size will correct disruptions to solar insolation. To help the installer determine shading problems, solar pathfinders are available from several manufacturers, or use the Crome-Dome provided with this manual.

 © UNBS 2009 – All rights reserved

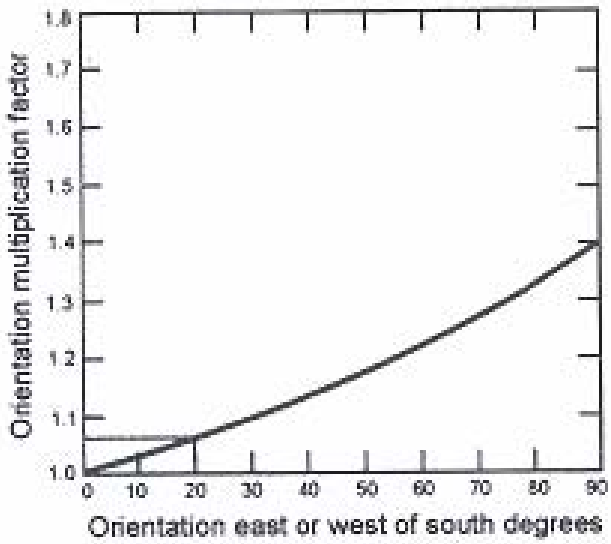

Figure I.7 - Glazed collector orientations

Tilt angle

The best tilt angle will vary not only with the collector's geographical location but also with seasonal function. Solar water heating systems are designed to provide heat year-round.

Figure I.8 below shows results for various collector tilt angles for Central Florida. For the slope angles shown in the figure, we observe these effects:

a) Mounting at an angle equal to the latitude works best for year-round energy use.

b) Latitude minus 15° mounting is best for summer energy collection.

c) Latitude plus 15° mounting is best for winter energy collection.

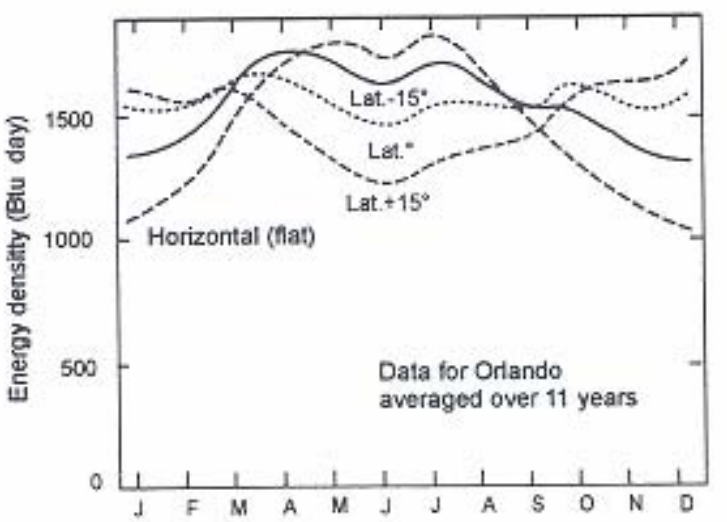

Figure I.8 – Various collector tilt angles

Table I.1 illustrates the effect of various tilt angles on a flat/plate solar collector installed in Miami, Florida.

© UNBS 2009 – All rights reserved

Table I.1 – Solar radiation for flat-plate collectors facing south at a fixed tilt (kWh/m^2/day average) in Miami, Florida (25.80 ^{o}N latitude)

Tilt angle	Jan	Feb	Mar	Apr	May	Jun	Jul	Aug	Sep	Oct	Nov	Dec	Yr
0	3.5	4.2	5.2	6	6	5.6	5.8	5.6	4.9	4.4	3.7	3.3	4.8
Latitude -15	4.1	4.7	5.5	6.2	5.9	5.5	5.7	5.6	5.1	4.7	4.2	3.9	5.1
Latitude	4.7	5.2	5.7	6.1	5.6	5.1	5.4	5.5	5.1	5.1	4.7	4.5	5.2
Latitude +15	5.0	5.4	5.6	5.7	5.0	4.5	4.8	5	4.9	5.1	4.9	4.9	5.1
90	4.1	3.9	3.4	2.6	1.9	1.6	1.7	2.1	2.7	3.5	3.9	4.1	3

Methods exist to move a collector so the sun's rays strike it at a right angle all day and in all seasons. Use of such sun-tracking mechanisms increase the amount of energy a collector receives, but it also increases the system's cost, complexity and future maintenance requirements. Most practical designs accept the loss of energy suffered through fixed mounting and use an orientation and tilt to collect the most usable solar energy possible.

Therefore, for year-round use, a collector tilt of about 25° for south Florida or about 30° in North Florida works best. On a final note, installers must also keep in mind the aesthetics of the collector mounting on the plane of the roof.

Heat storage

Most solar thermal systems employ a material with high energy capacity to store sensible heat until it is needed for a specific purpose. Water, masonry and even iron are all such thermally massive materials with high energy capacities. When the purpose of the solar thermal system is to provide heated water, the water itself is the thermal mass that stores the heat generated by the solar collector.

For these solar water heating systems, the water itself may be the fluid heated in the collector and then delivered directly to the tank. In areas where freezing temperatures are common during winter, the heat collecting fluid may be glycol or another heat transfer fluid with high energy capacity that can withstand freezing temperatures. Such systems employ heat exchangers at the storage tank to transfer the heat from the collector fluid to the potable water.

In solar water heating systems, the storage is sized with generous proportions to hold as much heated water as may be needed for a given purpose during times of low solar insolation. The tanks are also highly insulated to reduce heat losses.

Further from the equator, inlet water temperatures are colder, while in many cases, the insolation may be close to the same during some periods of the year. On a given day, if the amount of insolation is about the same, one might think solar systems in Toronto or Miami would perform about the same. The total heat energy collected and stored in the tank may be about the same, but the end-of-the-day tank temperatures will be different.

The Toronto storage tank will be colder than the Miami storage tank due to the difference in cold water supply temperatures. The cold water supply water temperature in Miami is approximately 24 °C, while the cold supply in Toronto is approximately 7 °C. More total solar energy is required to increase the Toronto system to the same end-of-the-day tank temperature.

To achieve the same end-of-the-day tank temperatures in Toronto you must increase the size of collector area to increase the energy gain of the system. Simply put, more collectors are required in order to increase the total degrees of the water being heated.

Additional system considerations

To meet its intended purpose, a solar thermal system must meet criteria beyond simply collecting and storing solar energy.

 © UNBS 2009 – All rights reserved

Safety

A solar thermal system must not contaminate the medium used to store or provide the system's energy output. For example, solar water heating systems must not contaminate water that may be used in food preparation or in human contact activities. For this reason, solar water heaters with heat exchangers frequently employ two walls to isolate the potentially dangerous heat collecting fluid from the water to be heated.

Mechanical safety must also be assured in designing and installing solar collectors. A 1.2-m-by-3-m solar collector can act like an airplane wing in strong winds, so it must be structurally well connected and securely attached to its mounting surface.

Affordability

Affordability can be defined as performance balanced by price. A solar thermal system with collectors that track the sun's path will perform better than one with fixed collectors. However, the tracking mechanisms can double the cost of the system. In the same way, a solid gold absorber will perform better than a copper one, but the cost would be astronomical. To be affordable, a solar thermal system must balance performance and cost. Because solar thermal systems produce kilowatt-hour, kW-h/$ is a good measure of affordability.

Materials used

Materials for solar energy systems must be chosen carefully. The most important factors are safety, performance, durability and cost.

The materials must retain their shape and strength during repeated thermal expansion and contraction-all the while being exposed to the weather. Collector materials lead hard lives. The collector is exposed to wind, rain, hail, temperature extremes and ultraviolet radiation. Untreated plastics, woods and synthetic boards deteriorate rapidly under such conditions. Even steel must be protected by plating, galvanizing or painting. The collectors must be able to tolerate stagnation temperatures. This can be as high as 205 °C for some solar collectors. Durability is important in all materials used in a solar system because the cost effectiveness varies directly with their life expectancy.

© UNBS 2009 – All rights reserved

Annex J

Crome-dome collector siting aid

The Crome-Dome is designed to determine the best location for a solar collector. It will work well for any location in Florida, but it is not appropriate for use farther north than 31°N latitude (southern Georgia).

A collector should be mounted in an area receiving sunshine during the entire year. The sun's path drops closer to the horizon during winter, and is higher in the sky during summer. The sun's lowest path, its highest path, and its position three hours before and after solar noon define the solar window. (See Figure J.1.) The solar window is shown on the Crome-Dome by the heavy black lines on the sun path diagram.

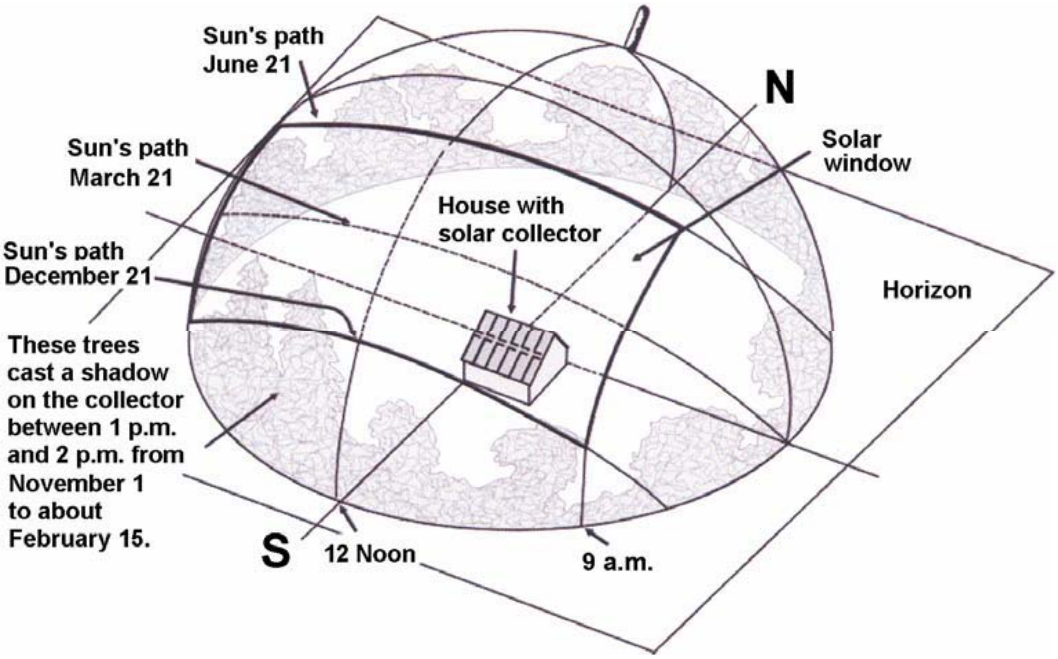

To use the Crome-Dome, stand a few feet in front of the proposed collector site facing south.* (Use a compass to determine south.) Holding the Crome-Dome base as level as possible, and several inches from your eye, look upward through the sighting circle. Align the cross hairs within the sighting circle with the lower edge of the solar window. If you can see any objects (trees, buildings) through the viewer that are within the solar window, these objects will shade the collector site.

By aligning the collector location, your eye, cross hairs and object, (see Figure J.2) you can read from the sun path diagram the times of day and times of year a particular object will shade the collector location. When checking for high angles (summer), tilt your head all the way back and peer through the viewer on the base of the Crome-Dome. The summer sun path goes almost directly overhead.

*If you are on a roof, it is safer to squat or sit at the base of the collector location.

 © UNBS 2009 – All rights reserved

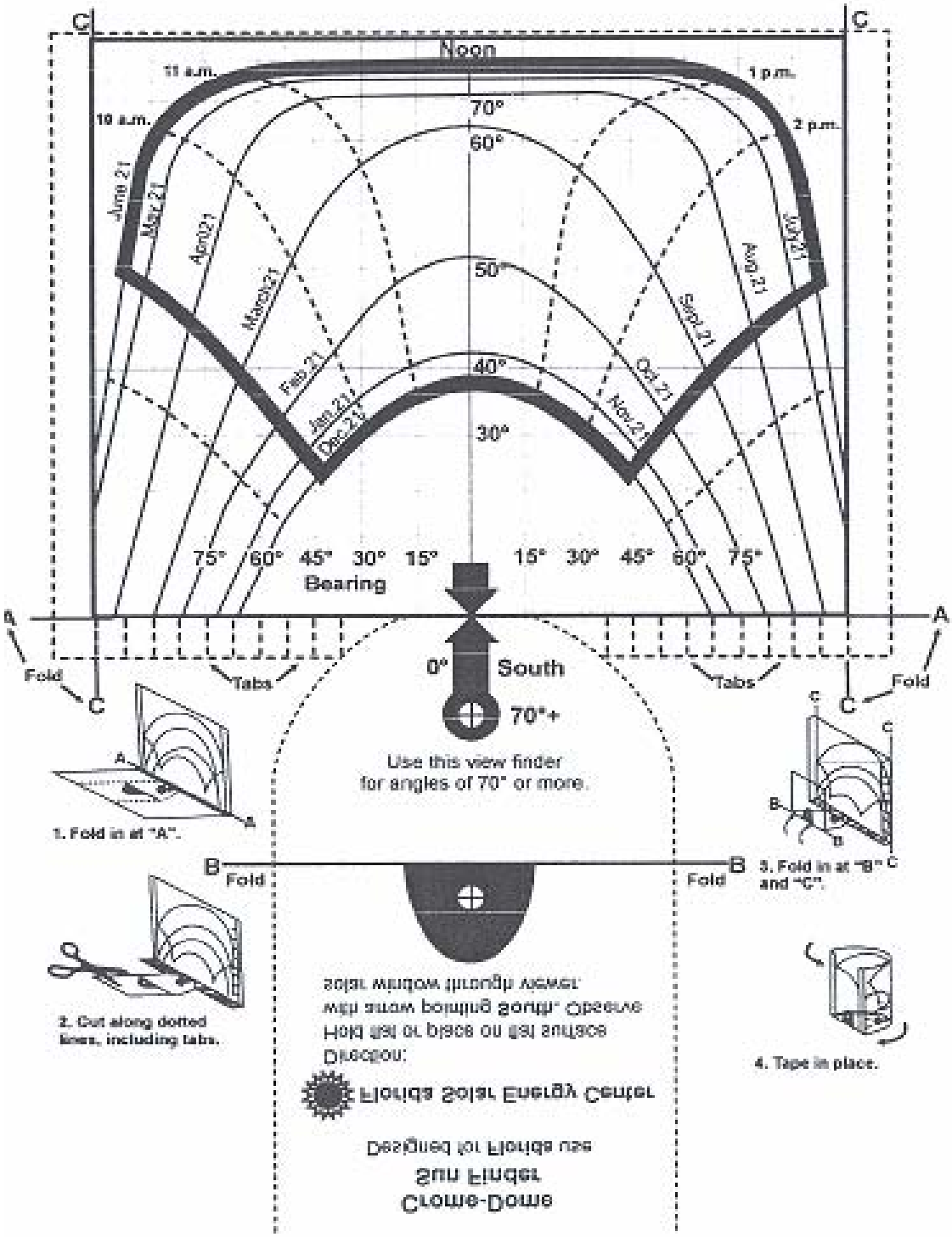

© UNBS 2009 – All rights reserved

Annex K

Simplified sizing procedure for solar domestic hot water systems

The following procedure was developed to size residential Solar Water heating systems in Florida. See last page for limitation and assumptions.

Hot water demand and tank size

Step 1. Using Table 1, Estimate daily hot water use (litres) and select a nominal tank size (TANK SIZE).

	L/day
LITRES	(1)
TANK SIZE	L

Table K.1- Hot water demand and tank size

Average LITRES[1] and minimum TANK SIZE based upon number of people:

People	LITRES	Minimum TANK SIZE (Gallons)
1	75	151
2	151	151
3	208	250
4	265	303
5	322	303
6	378	378
7	435	450

(Add 57 litres per person for each additional person)

Step 2. Use meteorological maps to determine the proper cold water temperature (COLD TEMP) for location.

Step 3. Calculate how much energy is needed (BTUNEED) to heat the water to 50 oC.

BTUNEED = 8.34 x LITRES x (50-COLD TEMP) x Standby loss factor

BTUNEED = 8.34 x _____ x (50- _____) x _____ _____ Btu/day (3)
(Step 1) (Step 2) (Table 2) BTUNEED

Table K.2 – Standby heat loss from storage

Type of tank installation……	**Standby loss factor**
25-mm foam or 63.5-mm fibreglass (R = 8-9)	1.20
50-mm foam (R =16-17)	

(Use linear interpolation to obtain standby loss factor for insulation materials having other R-values.) Table K.2 is to be used for sizing systems with FSEC ratings. If SRCC rating is used and if there are no other backup tanks use a standby loss factor or 1.0.

Example: A thermosiphon water heater with its storage tank containing a back-up element has an SRCC rating. There are not other back-up tanks for the system. In this case use a standby loss factor = 1.0.

[1] 1 Gallon [u.s.liquid] = 3.785 412 liter [metric]

 © UNBS 2009 – All rights reserved

Example: The same thermosiphon water heater system is used as a preheat to another back-up tank. The element in the thermosiphon tank may not be connected. In this case use a standby loss factor from Table K.2 corresponding to back-up tank insulation level.

Collector sizing

Step 4. Determine penalty factors that affect sizing.

a. Select the system Factor form Table K.3. System Factor (4a)

b. Select the proper Tilt Factor from Table K.4. Tilt Factor (4b)

c. Select the Orientation Factor from Table K.5. Orientation Factor (4c)

Calculate the overall penalty factor (PENALTY) for the combination of all the three individual effects:

PENALTY = System Factor x Tilt Factor x Orientation Factor

PENALTY = _____ x _____ x _____ _____
(Step 4a) (Step 4b) (Step 4c) PENALTY (c)

Table K.3 – System Factor

System configuration	System Factor
Direct system with no heat water exchanger.	1.29
Indirect system with a heat exchanger between collector and storage tank.	1.30
Systems with SRCC system certification and Q_{NET} rating.	1.00

Table K.4 – Tilt factor

Collector tilt

Tilt angle (^{o})	Roof pitch	Roof tilt
0 to 3	0	0°
3 to 7	1 in 12	4.8^o
7 to 12	2 in 12	9.5^o
12 to 16	3 in 12	14.0^o
16 to 20	4 in 12	18.4^o
20 to 25	5 in 12	22.6^o
25 to 30	6 in 12	26.2^o
30 to 37	8 in 12	33.7^o
37 to 43	10 in 12	39.8^o
43 to 59	12 in 12	45.0^o

Table K.5 – Orientation Factors

Collector orientation	Orientation Factor
South or nearly south	1.00
Southeast or southwest	1.15
East or West	1.40

© UNBS 2009 – All rights reserved

Step 5 Calculate the rating requirements of the solar system (RATREQD)

To provide 70 % of the annual hot water energy needs using the formular:

RATREQD = BTUNEED x 0.70 x PENALTY

RATREQD = _____ x 0.70 x _____ _____ BTU/Day
(Step 3) (Step 4) RATREQD (5)

Step 6 For the collector selected, record the thermal performance rating at the intermediate temperature (BTURATING) in Btu/day and the gross collector area (GROSSAREA) in square feet form the required FSEC label.

Collector manufacturer _____
Model No. _____

Thermal Performance rating at the intermediate temperature (Btu/day) _____ Btu/day
BTURATING (6a)

Or SRCC Q_{NET} or Q_{NET} equivalent*
Estimate the number of collectors needed using:

$$\text{NUMBER} = \frac{\text{RATREQD}}{\text{BTURATING}} = \frac{\text{(Step 5)}}{\text{(Step 6)}}$$

_____
NUMBER (6c)

Step 7 Select the actual number of collectors to be used. This is nearest _____
NO.COLLECTROS (7a)

Whole number (6c)

The total area of the number of collector array is

TOTAL AREA = NO. COLLECTORS x GROSSAREA

TOTAL AREA = _____ x _____ _____ m^2
(Step 7a) (Step 6b) TOTAL AREA (7b)

For those systems that are SRCC certified use the SRCC Q_{NET} rating here. Systems with only FSEC test and certification may bet an equivalent SRCC Q_{NET} from Testing & Operations on request.

 © UNBS 2009 – All rights reserved

Based upon the actual number of collectors to be used, compute the solar fraction (SOLAR FRACTION):

$$\text{SOLAR FRACTION} = \frac{0.70 \times \text{NO. COLLECTORS}}{\text{NUMBER}} = \frac{0.70 \times \dfrac{\text{(Step 7a)}}{\text{(Step 6c)}}}{} = \frac{}{\text{SOLAR FRACTION (7c)}}$$

If the solar fraction (Step 7c) is less than 0.65, the collector array is undersized. Consider either adding another collector or using a different model/size collector.

This procedure has several constraints:

1. The procedure is valid only for Florida

2. The procedure is based on sizing solar systems to provide between 65% and 75% of the heating load; i.e., a solar fraction of between 0.65 and 0.75. A solar fraction of 0.7 is estimated to be optimum for most installations and, in particular, for solar collectors with a tilt angle of approximately 20° — 25° (mounted parallel to the 10 cm in 30 cm or 12.5 cm in 30 cm pitched roofs that are common in Florida). The 20° — 25° collector tilt angle provides for an aesthetic installation and meets 100% of the hot water needed in summer and 50 % in winter. Systems can be sized to maximize lifetime saving by providing a larger solar collector that will produce a solar fraction of 0.9 or higher. At high annual solar fractions however, the production and waste of excess heat during the summertime needs to be considered. To minimize collector size for high annual solar fractions, the collectors can be installed at a tilt angle of between 40° and 40°. Optimization of these types of systems is beyond the scope of this simplified sizing procedure. To achieve this solar fraction, the collectors will need to be installed at a tilt angle of between 40° and50°

3. The hot water delivery temperature of 50 °C in step 3 was obtained by FSEC from analysis of two years of actual experimental data. The 50 °C delivery temperature is consistent with Florida Law, which requires that hot water thermostats be set no higher than 50.7 °C. It is also consistent with electric water heater energy consumption data as measured by Florida Power and Light Co.

   Automatic dishwashers may not clean dishes very well at 50 °C. However, most dishwashers have a cycle that uses an electric element in the dishwasher to boost water temperature to about 60 °C.

© UNBS 2009 – All rights reserved

Annex L

Electric water heater circuitry

The following illustration shows the electrical connections in a standard hot water tank with two heating elements. Each electrical supply line has a potential of 230 volts measured to ground and 400 volts measured across the two lines. The illustration shows where the high-limit protector is located in the circuit. It also shows how the upper thermostat is used to prevent operation of both heating elements simultaneously.

First, power travels through the high-limit protector: a double-pole, single-throw (DPST) snap-action device. When the water reaches a predetermined temperature (about 82 °C), this device opens both contacts of both lines at the same time, which cuts all power to the heater. To restore operation, the reset button must be pressed.

At the output side of the high-limit protector, the circuit splits and forms the parallel circuits that lead to the two elements through their respective thermostats. The upper thermostat is a double-pole, double-throw (DPDT) bimetal type, designed so that when one of the contacts is closed, the other is open, and vice versa. This thermostat is always in operation. Depending on the demand for hot water, it supplies power to either the upper or lower element, but never to both elements at the same time.

The lower thermostat is a single-pole, single-throw (SPST) type and controls the lower element. Before this lower element can be energized, the upper thermostat must be "satisfied" (even though the lower thermostat contacts may be closed).

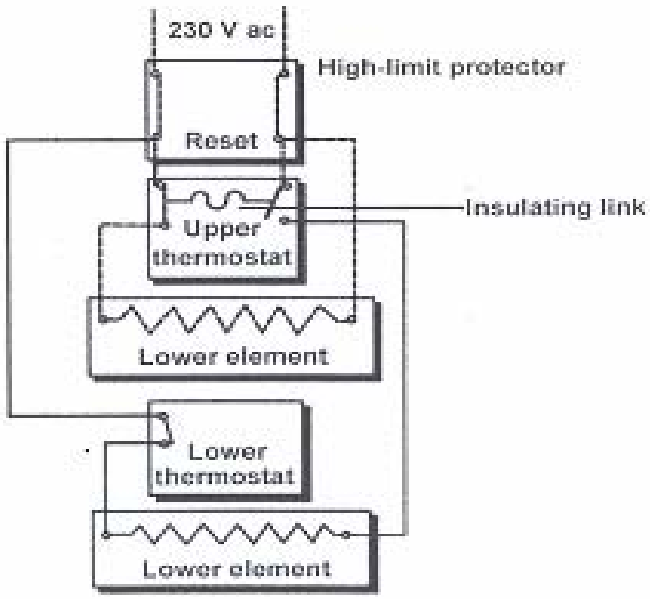

Figure L.1 – Typical electrical connections in a tank with two heating elements

© UNBS 2009 – All rights reserved

Annex M

Volt-ohmmeter (VOM) or multimeter operation

The volt-ohmmeter (VOM) measures voltage and resistance. (Some VOMs also measure current but current measurements are not needed in controller troubleshooting.) VOMs have either an analog or a digital readout. The analog display uses a needle pointer on a scale. The digital display gives an LCD numerical reading. Both types of meters operate from batteries and usually have a battery low indicator to signal when new batteries are needed.

The meter contains two probes with wire leads, one black (the common or ground lead) and one red (the positive lead), which plug into color-coded receptacles on the meter. For detailed information about operation of the meter, refer to the VOM manual.

Check the VOM before each use:

1. Turn on the power switch. If the battery replacement indicator signals low batteries, replace them before continuing.

2. Set the function switch to "ohms," and set the range switch to a mid range around 0 to 20K ohms. (Note: K equals 1 000 and V refers to volts.) Connect the probe wires to the proper receptacles and touch the red probe to the black probe without contact with your body.

The meter should read zero (0) or 0.00 (digital), showing continuity. If it does not, adjust to zero. If the meter doesn't respond, check the battery supply for a blown fuse.

Two types of thermistors (sensors that change resistance with changing temperature) are generally used in control systems — the 3 000 (3K) ohm and the 10 000 (10K) ohm. Table M.1 lists the usual VOM settings for measuring resistance; Table M.2, for measuring AC voltage; and Table M.3, for measuring DC voltage.

Thermistor resistance should match temperature as closely as possible, as shown in Table M.4. To be accurate, disconnect the thermistor from the circuit before measuring it.

Table M.5 lists the resistance setting for a positive temperature coefficient resistance temperature device (RTD) that uses 1 000 (1K) ohm sensors.

Resistance measurements with the VOM

Remember any circuit must be disconnected to measure its resistance.

Table M.1 – Measuring resistance with the volt –ohmmeter

Measuring	In the Range of		Function switch at	Range switch at	Multiply reading by
	Minimum	Maximum			
Resistance	0	199	Ohms	20 000	1
Resistance	200	1 999	Ohms	2K	1 000
Resistance	2 000	19 999	Ohms	20 K	1 000
Resistance	20 000	199 999	Ohms	200 K	1 000
Resistance	200 000	1 999 999	Ohms	2M	1 000 000
Resistance	2 000 000	19 999 999	Ohms	20 M	1 000 000

AC Voltage Measurements with the VOM

- Never measure circuits containing over 700 volts AC.
- Always make measurements from one line to the other (this is measuring in parallel).
- Never insert probes in series with a line.
- If the voltage is unknown, start with the highest range on the VOM.

© UNBS 2009 – All rights reserved

Table M.2 – Measuring AC voltage with the volt-ohmmeter

AV voltage	In the Range of		Function switch at	Range switch at	Multiply reading by
	Minimum	Maximum			
AV Voltage	0	0.19	AC 0.7 kV	200 mV	0.01
AV Voltage	0.2	1.9	AC 0.7 kV	2V	1
AV Voltage	2	19.9	AC 0.7 kV	20 V	1
AV Voltage	20	199.9	AC 0.7 kV	200 V	1
AV Voltage	200	700.0	AC 0.7 kV	2kV	1 000

DC voltage measurements with the VOM

- Never measure circuits containing over 1 000 volts DC.
- Always measure in parallel with the lines.
- Never insert probes in series with the circuit.
- If the voltage is unknown, start with the highest range on the VOM.

Table M.3 – Measuring DC voltage with the volt-ohmmeter

DC voltage	In the Range of		Function switch at	Range switch at	Multiply reading by
	Minimum	Maximum			
DC Voltage	0	0.19	DC 1 kV	200 mV	0.01
DC Voltage	0.2	1.9	DC 1 kV	2V	1
DC Voltage	2	19.9	DC 1 kV	20 V	1
DC Voltage	20	199.9	DC 1 kV	200 V	1
DC Voltage	200	700.0	DC 1 kV	2kV	1 000

Current measurements with the VOM

Amperage measurements are not needed in the troubleshooting of controllers. Even if your VOM measures only up to 1 A safely, do not use it as an ammeter placed in series with the pump or motor valves. Some VOMs have extended 10 A ranges, but even these may be damaged if the circuit has a low-resistance short.

Possible causes for thermistor malfunction

To check the thermistors in a solar DHW system, disconnect the thermistor leads at the controller. Remember also, a change in temperature changes thermistor resistance. Make sure the pump is not cycling on and off, changing measurement conditions.

Open Circuit

If the VOM measures an open circuit (an infinite resistance reading), either the sensor is bad or the associated wiring is broken somewhere along its length. A break may occur where the wire crosses a sharp edge of the building or where it has been bent. Run new wires if the break cannot be found and repaired.

High resistance

A high, but not infinite, resistance may also indicate a bad sensor or lead wire. Disconnect the sensor from the lead wire and check the resistance at or near room temperature. The resistance should measure at or near 3K or 10K, depending on thermistor rating.

Short Circuit

A shorted circuit can also indicate a bad sensor or contact in the associated wiring. This is indicated on the VOM by a zero reading, which shows continuity between the lines.

Drift

On rare occasions, thermistor resistance drifts to the wrong value for its temperature and it must be replaced. This drift is usually due to aging and can be checked with the VOM. Refer to Table M.4 of thermistor temperatures. When resistance readings are correct or nearly correct for various temperatures, the thermistor is working properly. There may be resistance in the wiring. To check the associated wiring, use a jumper to short across the sensor. The ohm resistance of the wiring itself should go near zero. If the resistance still

 © UNBS 2009 – All rights reserved

exists, make sure all connectors are clean and no breaks with resistance contact are found. If none of these are found, to eliminate the wiring resistance, replace the wiring.

Table M.4 – Temperature and thermistor resistance

Temperature (^oC)	3 000 -Ω Thermistor	10 000 -Ω Thermistor	Temperature (^oC)	3 000 -Ω Thermistor	10 000 -Ω Thermistor
Thermistor open	Infinite	Infinite	33.3	2100	7000
Thermistor shorted	0	0	34.4	2010	6683
-1.1	10400		35.6	1920	6383
0	9790	32660	36.7	1830	6098
1.1	9260	30864	37.8	1750	5827
2.2	8700	29179	38.9	1670	5570
3.3	8280	27597	40.0	1600	5326
4.4	7830	26109	41.1	1530	5094
5.6	7410	24712	42.2	1460	4873
6.7	7020	23399	43.3	1400	4663
7.8	6650	22163	44.4	1340	4464
8.9	6300	21000	45.6	1280	4274
10.0	5970	19906	46.7	1230	4094
11.1	5660	18876	47.8	1180	3922
12.2	5370	17905	48.9	1130	3758
13.3	5100	16990	51.1	1040	3453
14.4	4840	16128	53.3	953	3177
15.6	4590	15315	55.6	877	2925
16.7	4360	14548	57.8	809	2697
17.8	4150	13823	60.0	746	2488
18.9	3940	13140	62.2	689	2298
20.0	3750	12494	64.4	637	2124
21.1	3570	11885	66.7	589	1966
22.2	3390	11308	68.9	546	1820
23.3	3230	10764	71.1	506	1688
24.4	3080	10248	73.9	461	1537
25.0	3000	10000	76.7	420	1402
25.6	2930	9760	79.4	383	1280
26.7	2790	9299	82.2	351	1170
27.8	2660	8862	85.0	321	1071
28.9	2530	8449	87.8	294	982
30.0	2420	8057	90.6	270	901
31.1	2310	7685	93.3	248	828
32.2	2200	7333	98.9	210	702

© UNBS 2009 – All rights reserved

Table M.5 – Temperature and RTD resistance

Temperature (^oC)	Resistance	Temperature (^oC)	Resistance
-1.1	861.8	1.7	876.1
4.4	890.5	7.2	905.1
10.0	919.2	12.8	933.9
15.6	948.7	18.3	963.7
21.1	978.2	23.9	993.4
26.7	1008.7	29.4	1024.0
32.2	1039.0	35.0	1054.6
37.8	1070.3	40.6	1086.1
43.3	1101.5	46.1	1117.5
48.9	1133.6	51.7	1149.9
54.4	1165.6	57.2	1182.1
60.0	1198.7	62.8	1215.4
65.6	1231.5	68.3	1248.4
71.1	1265.4	73.9	1282.5
76.7	1299.1	79.4	1316.5
82.2	1333.9	85.0	1351.4
87.8	1368.5	90.6	1386.2
93.3	1404.1	96.1	1422.0
98.9	1439.5	101.7	1457.7

© UNBS 2009 – All rights reserved

Annex N

Solar system flow rates

Determining flow rate

Determining approximate flow rate through the collector loop can help you identify problems in the system such as faulty pump operation, clogged or restricted pipes or failure of the check valve to open properly. Here are two simple methods for checking the solar system flow rate.

Method A

This method uses the "siphon principle" to keep water in the collector loop when the city water pressure is shut off. First, you must purge air from the collector loop. Also, you must vent the storage tank to the atmosphere to prevent a vacuum from forming during the following steps. Refer to the following illustration.

a. Turn off the back-up heating element (to avoid burning out the element should the water level drop to the element's level).

b. Ensure all air is purged from the collector loop and close or plug any valves (air vents or vacuum breakers) that may admit air into the pipes.

c. Close the shutoff valve in the cold water supply line to the tank,

d. Open the PT relief valve on the storage tank.

e. Attach a hose to the boiler drain on the return line from the collector(s). Drain off a few gallons of water so the standing water level is below the top of the tank and not in the hot and cold supply pipes. If you have a clear plastic hose, you can easily see the water level. When the level is about 25 mm below the top of the tank, stop the draining process by elevating the open end of the hose above the top of the tank. Leave the boiler drain open.

f. Close the isolation valve between the return line boiler drain and the tank.

g. Lower the open end of the hose to just above the standing water level in the tank. Allow the level to come to equilibrium.

h. Place a vessel of known volume where it can receive all the discharge from the hose attached to the return line boiler drain. Keep this container as close to the water level line as possible to minimize static head influences on the flow rate.

i. Manually turn on the pump and use a stopwatch to measure the time required to fill the vessel,

j. Turn off the pump. Use this formula to calculate the flow rate:

$$\text{Flow rate} = \frac{\text{Volume}}{\text{Time}}$$

k. Close the return line boiler drain. Open the shutoff valve in the cold water supply to refill the tank. Bleed off the entrapped air through the PT relief valve, and close it when the tank is full.

l. Open the remaining valves to return the system to normal operation. This avoids prolonged stagnation in the collector loop.

© UNBS 2009 – All rights reserved

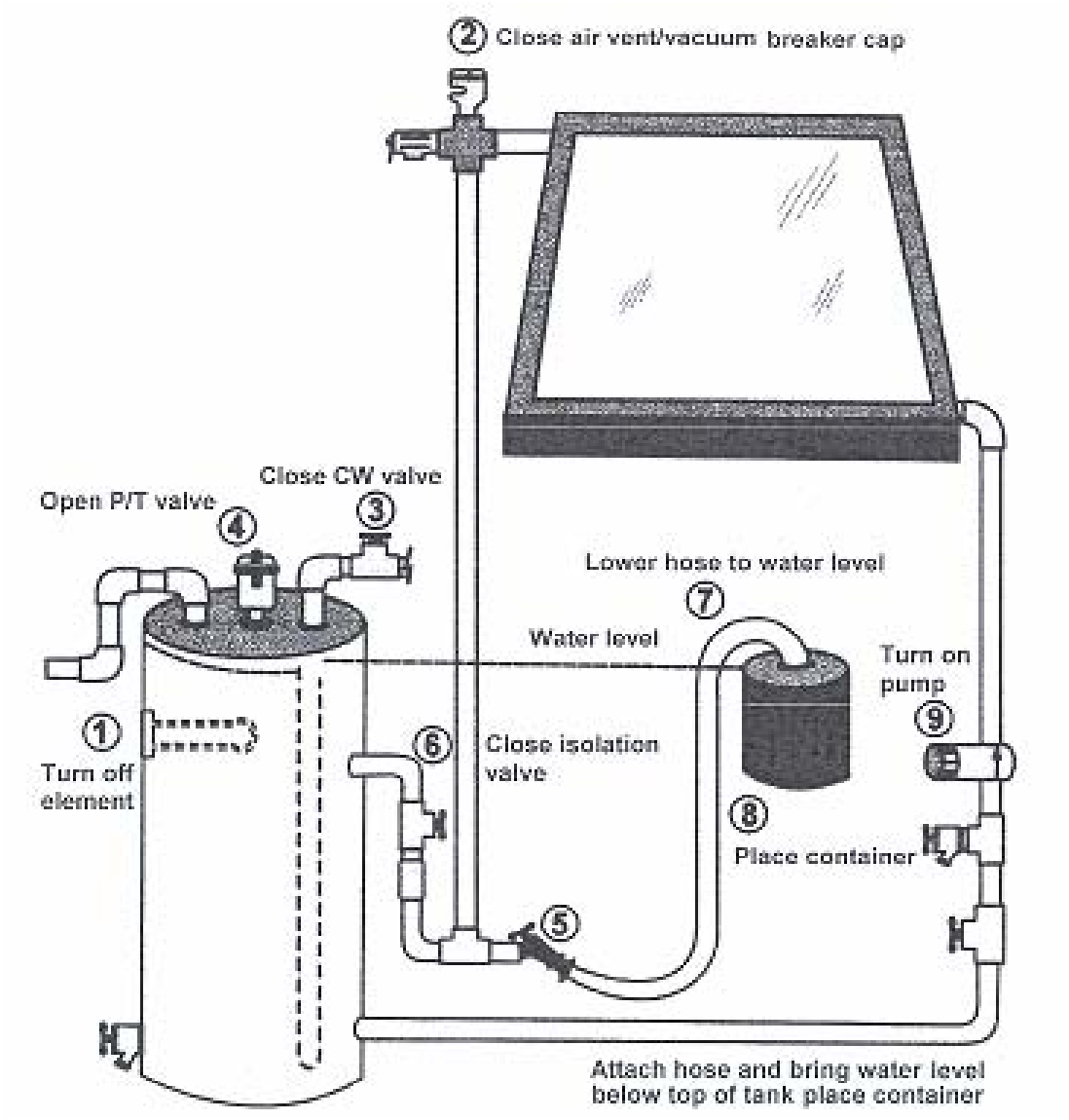

Figure 5.1 – Determination of flow rate

Method B

Another less accurate method can be used when the system is plumbed in such a way that you cannot follow Method A.

a. Determine the volumetric capacity of the collector.

b. Turn off the pump and allow the collector loop pipes to cool down to equilibrium (and the collector to heat up).

c. Put your hand on the return pipe near the tank and turn on the pump. When you feel the "slug" of hot water warm the area under your hand, start timing. Use a stopwatch. Continue timing until the pipe starts to cool down again.

d. Calculate the approximate flow rate by dividing the volumetric capacity by the time measured (litres/minute or litres/second).

 © UNBS 2009 – All rights reserved

Flow rates and water stratification in solar tanks

Flow rates also have a direct correlation to system performance. Low flow rates in single-tank direct systems result in better overall system performance. Low circulation does not mix up the water in the solar tank and thereby enhances stratification.

When water circulates through the collectors and returns at a low flow rate, the hottest water will migrate to the upper portion of the tank. The colder water at the bottom of the tank will not mix with the returning collector-heated water. Thus, the bottom water being fed to the collector is the coldest water in the tank. This in turn improves the collector's efficiency because the colder the inlet temperature, the more efficient the collector panel.

To improve system performance by using lower flow rates and better stratification, follow these guidelines:

a. Use a flow rate of approximately 0.04 l/min (0.0006 l/s) square metre of collector panel (e.g. 3.71612 square metre of panel × 0.01 = 2 l/min (0.03 l/s)).

b. Use dip tube diffusers on your cold and hot ports. You can make these by heat closing the end of the dip tube and drilling holes near the end — so the water exits sideways instead of downward.

c. Return the solar heated water at least 200 to 250 mm below the top heating element.

© UNBS 2009 – All rights reserved

Annex P

Tools for service and repair

To avoid costly delays, repair and service personnel must arrive at the scene fully prepared and outfitted. Listed below are the recommended tools and equipment for diagnosis and repair of DHW systems.

Bucket, 5-gallon plastic

Brush, flux

Brush, wire

Chalk-line reel

Compass

Crimping tool

Cutter, copper and PVC

Drill, battery operated

Drill, electrical

Drill bits, assorted size set, high speed steel twist

Drill bits, 19 mm to 75 mm set, steel hole saw

Drill bits, 9 mm to 25 mm size set, power wood

Extension drill

Extension cord, 30 m

Extinguisher, fire (A: B: C: rated)

Flashlight, industrial

Glasses, safety

Gloves, work

Gun, caulking

Gun, soldering

Hacksaw

Hammer, claw

Hand pump, or small air compressor

Hex key sets, standard and metric

Hose, rubber 7.5 m

Inclinometer

Knife, utility

Ladder, extension 7.2 m

Lamp, heavy duty trouble

Level, 610 mm

Level, magnetic torpedo

Mask, dust

Mirror, inspection

Multimeter or voltmeter

© UNBS 2009 – All rights reserved

Nut driver set, standard and metric
Pliers, diagonal cutting 150 mm
Pliers, locking 25 mm
Pliers, needle nose 203 mm
Pliers, 150 mm
Pliers, slip joint 203 mm
Plumb bob
Pop riveter
Pressure gauge, testing
Putty knife
Rope, safety 9.5 mm × 30 m
Saw, hand 8 point, general purpose
Saw, skill
Saw, miter
Screwdriver, angle
Screwdriver set, electronic
Screwdriver set, Phillips
Screwdriver set, standard
Sensor stimulator
Slate, nail cutter
Shears, industrial
Shoes, non-skid
Socket wrench set
Torch, acetylene
Torch, propane
Vise, mechanics
Vise grips, 25 mm
Water meter key
Wire strippers
Wrench set, Alien
Wrench, adjustable
Wrench, pipe 25 mm
Wrenches, open-end kit, 8 mm to 18 mm

© UNBS 2009 – All rights reserved

Bibliography

23.040.01: Pipeline components and pipelines in general

[1] ISO 6708:1995, *Pipework components — Definition and selection of DN (nominal size)*

[2] ISO 7268:1983, *Pipe components — Definition of nominal pressure*

[3] ISO 9311-1:2005, *Adhesives for thermoplastic piping systems — Part 1: Determination of film properties*

[4] ISO 9311-2:2002, *Adhesives for thermoplastic piping systems — Part 2: Determination of shear strength*

[5] ISO 9311-3:2005, *Adhesives for thermoplastic piping systems — Part 3: Test method for the determination of resistance to internal pressure*

[6] ISO 9356:1989, *Polyolefin pipe assemblies with or without jointed fittings — Resistance to internal pressure — Test method*

[7] ISO/TS 10465-1:2007, *Underground installation of flexible glass-reinforced pipes based on unsaturated polyester resin (GRP-UP) — Part 1: Installation procedures*

[8] ISO/TR 10465-2:2007, *Underground installation of flexible glass-reinforced pipes based on unsaturated polyester resin (GRP-UP) — Part 2: Comparison of static calculation methods*

[9] ISO/TR 10465-3:2007, *Underground installation of flexible glass-reinforced pipes based on unsaturated polyester resin (GRP-UP) — Part 3: Installation parameters and application limits*

[10] ISO 10802:1992, *Ductile iron pipelines — Hydrostatic testing after installation*

[11] ISO 10804-1:1996, *Restrained joint systems for ductile iron pipelines — Part 1: Design rules and type testing*

[12] ISO 10931:2005, *Plastics piping systems for industrial applications — Poly (vinylidene fluoride) (PVDF) -- Specifications for components and the system*

[13] ISO/TR 11295:1992, *Techniques for rehabilitation of pipeline systems by the use of plastics pipes and fittings*

[14] ISO 13845:2000, *Plastics piping systems — Elastomeric-sealing-ring-type socket joints for use with unplasticized poly (vinyl chloride) (PVC-U) pipes — Test method for leaktightness under internal pressure and with angular deflection*

[15] ISO 13951:2001, *Plastics piping systems -- Test method for the resistance of polyolefin pipe/pipe or pipe/fitting assemblies to tensile loading*

[16] ISO 15493:2003, *Plastics piping systems for industrial applications — Acrylonitrile-butadiene-styrene (ABS), unplasticized poly(vinyl chloride) (PVC-U) and chlorinated poly(vinyl chloride) (PVC-C) — Specifications for components and the system — Metric series*

[17] ISO 15494:2003, *Plastics piping systems for industrial applications — Polybutene (PB), polyethylene (PE) and polypropylene (PP) — Specifications for components and the system — Metric series*

[18] ISO/TS 15874-7:2003, Plastics piping systems for hot and cold water installations — Polypropylene (PP) — Part 7: Guidance for the assessment of conformity

 © UNBS 2009 – All rights reserved

Certification marking

Products that conform to Uganda standards may be marked with Uganda National Bureau of Standards (UNBS) Certification Mark shown in the figure below.

The use of the UNBS Certification Mark is governed by the Standards Act, and the Regulations made thereunder. This mark can be used only by those licensed under the certification mark scheme operated by the Uganda National Bureau of Standards and in conjunction with the relevant Uganda Standard. The presence of this mark on a product or in relation to a product is an assurance that the goods comply with the requirements of that standard under a system of supervision, control and testing in accordance with the certification mark scheme of the Uganda National Bureau of Standards. UNBS marked products are continually checked by UNBS for conformity to that standard.

Further particulars of the terms and conditions of licensing may be obtained from the Director, Uganda National Bureau of Standards.

© UNBS 2009– All rights reserved

ICS 27.160

Price based on 172 pages

© UNBS 2009– All rights reserved