US EAS 379-2

UGANDA STANDARD

First Edition
2006-11-14

Information technology — Configuration of customer premises cabling (CPC) for applications — Part 2: Integrated services digital network (ISDN) primary rate

Reference number
US EAS 379-2:2005

© UNBS 2006

Compliance with this standard does not, of itself confer immunity from legal obligations

A Uganda Standard does not purport to include all necessary provisions of a contract. Users are responsible for its correct application

© UNBS 2006

All rights reserved. Unless otherwise specified, no part of this publication may be reproduced or utilised in any form or by any means, electronic or mechanical, including photocopying and microfilm, without prior written permission from UNBS.

Requests for permission to reproduce this document should be addressed to

The Executive Director
Uganda National Bureau of Standards
P.O. Box 6329
Kampala
Uganda
Tel: 256 41 505 995
Fax: 256 41 286 123
E-mail: unbs@infocom.co.ug

Foreword

Uganda National Bureau of Standards (UNBS) is a parastatal under the Ministry of Tourism, Trade and Industry established, under Cap 327 of the Laws of Uganda. UNBS is mandated to co-ordinate the elaboration of standards and is

(a) a member of International Organisation for Standardisation (ISO) and

(b) a contact point for the WHO/FAO Codex Alimentarius Commission on Food Standards, and

(c) the National Enquiry Point on TBT/SPS Agreements of the World Trade Organisation (WTO).

The work of preparing Uganda Standards is carried out through Technical Committees. A Technical Committee is established to deliberate on standards in a given field or area and consists of representatives of consumers, traders, academicians, manufacturers, government and other stakeholders.

Draft Uganda Standards adopted by the Technical Committee are widely circulated to stakeholders and the general public for comments. The committee reviews the comments before recommending the draft standards for approval and declaration as Uganda Standards by the National Standards Council.

This Uganda Standard, US EAS 379-2, *Information technology — Configuration of customer premises cabling (CPC) for applications — Part 2: Integrated services digital network (ISDN) primary rate,* is identical with and has been reproduced from an East African Standard, EAS 379-2:2005, *Information technology — Configuration of customer premises cabling (CPC) for applications — Part 2: Integrated services digital network (ISDN) primary rate,* and adopted as a Uganda Standard.

For the purpose of this standard, the East African Standard text should be modified as follows:

a) Terminology

The words “this Uganda Standard” should replace the words “this East African Standard” wherever they appear.

b) References

The reference to East African Standards should be replaced by references to the appropriate Uganda Standards where they have been declared.

Committee membership

The following organisations were represented on the Technical Committee on Electrotechnolgy Standards (UNBS/TC 6) in the preparation of this standard:

- Physics Department, Makerere University Kampala – Chairman
- UMEME
- National Environment Management Authority
- Kampala City Traders Association (KACITA)
- Department of Electrical Engineering Kyambogo University
- Mantrac
- ABB Uganda
- Terrain Plant
- Car and General (U) Ltd
- Uganda National Bureau of Standards

EAS 379-2:2005
ICS 33.080

EAST AFRICAN STANDARD

Information technology —
Configuration of customer premises cabling (CPC) for applications —

Part 2:
Integrated services digital network (ISDN) primary rate

EAST AFRICAN COMMUNITY

© EAC 2005

First Edition 2005

Foreword

Development of the East African Standards has been necessitated by the need for harmonizing requirements governing quality of products and services in East Africa. It is envisaged that through harmonized standardization, trade barriers which are encountered when goods and services are exchanged within the Community will be removed.

In order to achieve this objective, the Partner States in the Community through their National Bureaux of Standards, have established an East African Standards Committee.

The Committee is composed of representatives of the National Standards Bodies in Partner States, together with the representatives from the private sectors and consumer organizations. Draft East African Standards are circulated to stakeholders through the National Standards Bodies in the Partner States. The comments received are discussed and incorporated before finalization of standards, in accordance with the procedures of the Community.

East African Standards are subject to review, to keep pace with technological advances. Users of the East African Standards are therefore expected to ensure that they always have the latest versions of the standards they are implementing.

© East African Community 2005 — All rights reserved*

East African Community

P O Box 1096

Arusha

Tanzania

Tel: 255 27 2504253/8

Fax: 255-27-2504481/2504255

E-Mail: eac@eachq.org

Web: www.eac.int

* © 2005 EAC — All rights of exploitation in any form and by any means reserved worldwide for EAC Partner States' NSBs.

INTERNATIONAL STANDARD

ISO/IEC 14709-2

First edition
1998-05

Information technology – Configuration of Customer Premises Cabling (CPC) for applications –

Part 2: Integrated Services Digital Network (ISDN) primary rate

Technologies de l'information – Configuration du câblage dans les locaux d'usagers (CPC) pour les applications – Partie 2: Accès primaire au réseau numérique à intégration de services (RNIS)

© ISO/IEC 1998

All rights reserved. Unless otherwise specified, no part of this publication may be reproduced or utilized in any form or by any means, electronic or mechanical, including photocopying and microfilm, without permission in writing from the publisher.

ISO/IEC Copyright Office • Case postale 56 • CH-1211 Genève 20 • Switzerland

PRICE CODE G

For price, see current catalogue

CONTENTS

Page

FOREWORD 3

INTRODUCTION 4

Clause

1 Scope 5

2 Normative references 5

3 Definitions 6

4 Abbreviations and symbols 6
4.1 Abbreviations 6
4.2 Symbols 7

5 Design requirements 7
5.1 General 7
5.2 Insertion loss 7
5.3 Power feeding 7
5.4 Electromagnetic environment 8
5.5 Spurs 8
5.6 Near-end crosstalk loss (NEXT) 8

6 Point-to-point configurations 8

7 Component requirements within dedicated ISDN cabling 9
7.1 General 9
7.2 Cables 9
7.2.1 General 9
7.2.2 Characteristic impedance 9
7.2.3 Attenuation 10
7.2.4 Near-end crosstalk (NEXT) loss 10
7.2.5 Insulation resistance 10
7.3 Connectors 10
7.4 Cords 10

8 Implementation over generic cabling systems 10
8.1 General 10
8.2 Connection of ISDN primary access to generic cabling 11
8.3 Requirements for ISDN primary access generic cabling adapters 12

9 Qualification of existing cabling 12
9.1 General 12
9.2 Spurs 13
9.3 Cabling integrity 13
9.4 Characteristic impedance 13
9.5 Insertion loss 13
9.6 Insulation resistance 13
9.7 Near-end crosstalk (NEXT) loss 13

INFORMATION TECHNOLOGY –

CONFIGURATION OF CUSTOMER PREMISES CABLING (CPC) FOR APPLICATIONS –

Part 2: Integrated Services Digital Network (ISDN) primary rate

FOREWORD

ISO (the International Organization for Standardization) and IEC (the International Electrotechnical Commission) form the specialized system for worldwide standardization. National bodies that are members of ISO or IEC participate in the development of International Standards through technical committees established by the respective organization to deal with particular fields of technical activity. ISO and IEC technical committees collaborate in fields of mutual interest. Other international organizations, governmental and non-governmental, in liaison with ISO and IEC, also take part in the work.

In the field of information technology, ISO and IEC have established a joint technical committee, ISO/IEC JTC 1. Draft International Standards adopted by the joint technical committee are circulated to national bodies for voting. Publication as an International Standard requires approval by at least 75% of the national bodies casting a vote.

International Standard ISO/IEC 14709-2 has been prepared by Joint Technical Committee ISO/IEC JTC 1: Information technology, Subcommittee SC 25: Interconnection of information technology equipment.

This standard specifies Customer Premises Cabling for the connection of customer premises equipment with 1,544 Mbit/s and 2,048 Mbit/s interfaces to ISDN primary access and leased lines.

The requirements in this standard are derived from ITU-T I.431 (Blue Book, Volume III) and contain additional requirements as well as modifications of ITU-T I.431 and IEC 60603-7.

The reader is referred to IEC 60950 for general safety requirements.

Other standards in the series are:

ISO/IEC 14709-1:1997, *Information technology – Customer Premises Cabling (CPC) for applications – Part 1: Integrated Services Digital Network (ISDN) basic access*

ISO/IEC 14763-1:—, *Information technology – Implementation and operation of Customer Premises Cabling – Part 1: Administration* [1]

ISO/IEC 14763-2:—, *Information technology – Implementation and operation of Customer Premises Cabling – Part 2: Planning and installation of copper cabling* [2]

ISO/IEC 14763-3:—, *Information technology – Implementation and operation of Customer Premises Cabling – Part 3: Acceptance testing for optical cabling* [2]

ISO/IEC 14763-4:—, *Information technology – Implementation and operation of Customer Premises Cabling – Part 4: Testing of balanced copper cabling* [2]

---

[1] To be published.

[2] Under consideration.

INTRODUCTION

This part of ISO/IEC 14709 is intended for use by those designing, planning, procuring, installing or testing cabling for ISDN primary access within a customer's premises. The design requirements are specified in clause 5; the minimum requirements for the associated components are specified in clause 7. In addition, guidance is given for the use of generic cabling in accordance with ISO/IEC 11801.

INFORMATION TECHNOLOGY –

CONFIGURATION OF CUSTOMER PREMISES CABLING (CPC) FOR APPLICATIONS –

Part 2: Integrated Services Digital Network (ISDN) primary rate

1 Scope

This part of ISO/IEC 14709 specifies the design and configuration of Customer Premises Cabling for the connection of primary access ISDN equipment.

It includes

- design requirements for ISDN primary access point-to-point configuration;
- cabling requirements for the installation of new cabling;
- criteria for the use of existing cabling;
- criteria for implementation of ISDN primary access on generic cabling systems according to ISO/IEC 11801.

This standard applies to the customer premises cabling for the transmission of ISDN primary access signals as defined by ITU-T I.431. The requirements in this standard apply to the cabling for both 1,544 Mbit/s and 2,048 Mbit/s interfaces.

2 Normative references

The following standards contain provisions which, through reference in this text, constitute provisions of this part of ISO/IEC 14709. At the time of publication, the editions indicated were valid. All standards are subject to revision, and parties to agreements based on this part of ISO/IEC 14709 are encouraged to investigate the possibility of applying the most recent editions of the standards indicated below. Members of IEC and ISO maintain registers of currently valid International Standards.

IEC 60603-7:1996, *Connectors for frequencies below 3 MHz for use with printed boards – Part 7: Detail specification for connectors, 8-way, including fixed and free connectors with common mating features, with assessed quality*

IEC 60807-8:1992, *Rectangular connectors for frequencies below 3 MHz – Part 8: Detail specification for connectors, four-signal contacts and earthing contacts for cable screen*

CISPR 22:1997, *Information technology equipment – Radio disturbance characteristics – Limits and methods of measurement*

CISPR 24:1997, *Information technology equipment – Immunity characteristics – Limits and methods of measurement*

ISO/IEC 11801:1995, *Information technology – Generic cabling for customer premises*

ISO/IEC 14709-1:1997, *Information Technology – Customer Premises Cabling (CPC) for applications – Part 1: Integrated Services Digital Network (ISDN) basic access*

ITU-T I.431: (Blue Book) *Integrated Services Digital Network (ISDN) – Primary user-network interface – Layer 1*

3 Definitions

For the purposes of this part of ISO/IEC 14709 the definitions of ISO/IEC 14709-1 and ISO/IEC 11801 apply, of which the following are repeated below.

3.1
cable unit
single assembly of one or more cable elements usually of the same type or category. The cable unit may have a screen

NOTE – A binder group is an example of a cable unit.

[3.1.8 of ISO/IEC 11801:1995]

3.2
channel
end-to-end transmission path connecting any two pieces of application-specific equipment. Equipment cables and work area cables are included in the channel

[3.1.13 of ISO/IEC 11801:1995]

3.3
spur
multiple appearances of the same conductor or conductors continuing past the point of termination. Otherwise known as bridged taps

4 Abbreviations and symbols

4.1 Abbreviations

BD	Building distributor
CD	Campus distributor
DC	Direct current
EMC	Electromagnetic compatibility
FD	Floor distributor
GC	Generic cabling
ISDN	Integrated services digital network
NEXT	Near-end crosstalk loss
NT	Network termination
PBX	Private branch exchange
TE	Terminal equipment

4.2 Symbols

Cable

Network Termination

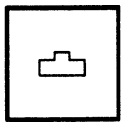
Dedicated cabling socket

Dedicated cabling plug

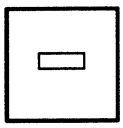
Generic cabling socket
(i.e. telecommunications outlet)

Generic cabling plug

5 Design requirements

5.1 General

Signals passing between the NT1/NT2 and TE or signals passing between the NT1 and NT2 are subject to attenuation, distortion and induced noise. These signals may also cause electromagnetic radiation. Cabling components (including extension cords, adapters, cross-connect components, sockets, junction boxes etc.) and cable all contribute to these effects.

5.2 Insertion loss

The insertion loss is measured from the NT1 to the TE, or from NT1 to NT2 at

- 0,772 MHz with 100 Ω non-reactive source and load impedances for 1,544 Mbit/s transmission rate;
- 1,024 MHz with 120 Ω non-reactive source and load impedances for 2,048 Mbit/s transmission rate.

The maximum insertion loss shall not exceed 6 dB in accordance with the system requirements of ITU-T I.431.

5.3 Power feeding

In some cases power can be supplied via the cabling from the TE to the NT1 or from the NT2 to the NT1. In these cases a separate pair dedicated to power feeding is required.

5.4 Electromagnetic environment

The performance of the ISDN primary access may be degraded by interference from external sources of electromagnetic radiation (such as motors), and from electrical signals from other applications carried under the same cable sheath. These effects can be minimized by employing good installation practice.

The impulsive noise generated by circuits carrying, for instance, analogue telephone signals or some unbalanced data transmission, can cause interference with signals carried on the ISDN cabling. Interference by crosstalk can be limited by putting pairs or quads for ISDN primary access in separate cables or cable units in the same cable.

EMC, emission and immunity to interference from the environment also have to be considered. EMC can be improved by screening, balancing of equipment, balance of cabling, filtering or a combination of these. However, all equipment and systems shall meet the requirements of EMC standards. The current relevant standards are CISPR 22 for emission and CISPR 24 for immunity.

5.5 Spurs

There shall be no spurs in the ISDN primary access cabling.

5.6 Near-end crosstalk loss (NEXT)

The NEXT of the cabling shall be greater than 25 dB at frequencies up to 1,0 MHz in accordance with the Class B link requirements of ISO/IEC 11801 and the system requirements of ITU-T I.431.

6 Point-to-point configurations

Point-to-point configurations are illustrated in figure 1.

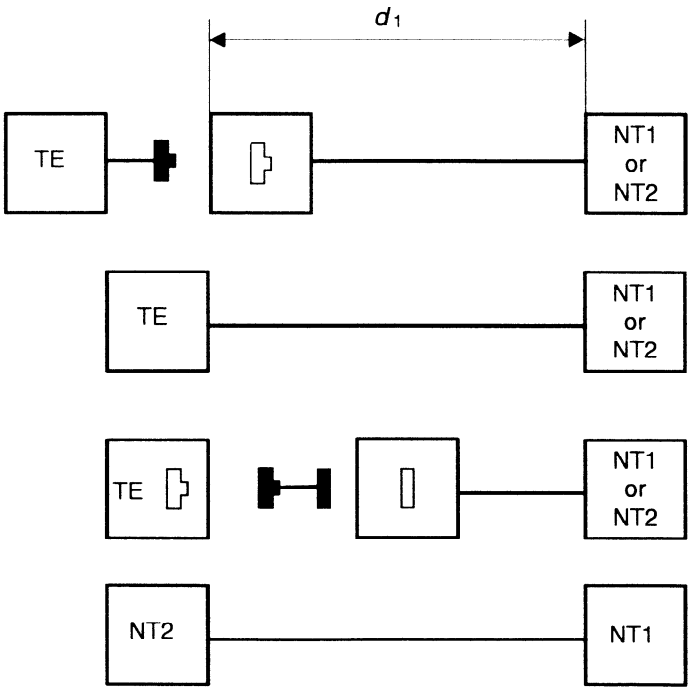

d_1 is the distance between the NT1 and the point of connection of the customer's terminal equipment. d_1 also applies to the distance between NT1 and NT2.

Figure 1 – Point-to-point configurations

Figure 1 is also relevant for the connection of an NT1 to an NT2.

The TE can be connected to the cabling in one of three ways

- via a plug at the end of a cord connected to the TE;
- hardwired, e.g. by the use of insulation displacement connectors incorporated in the TE;
- via a socket within the TE.

The insertion loss is measured over the distance d_1 in figure 1 and shall not be greater than specified in 5.2.

Two pairs shall be available: one for the transmit circuit and one for the receive circuit.

It is recommended that the polarity of each wire be maintained throughout the length of the cabling to facilitate testing and provide more effective cable management.

7 Component requirements within dedicated ISDN cabling

7.1 General

Cabling specifically designed to support ISDN primary rate services shall comprise components which meet the requirements of 7.2, 7.3 and 7.4.

The implementation of ISDN primary rate applications over generic cabling in accordance with ISO/IEC 11801 is defined in clause 8.

7.2 Cables

7.2.1 General

Balanced cables (twisted pair or star quads) shall be used. The cable or cable elements may be screened or unscreened (see 5.4).

7.2.2 Characteristic impedance

The characteristic impedance of the cable shall be in accordance with table 1.

Table 1 – Characteristic impedance requirements

	Transmission rate	
	1,544 Mbit/s	2,048 Mbit/s
Frequency MHz	**Characteristic impedance** Ω	
0,200 – 0,772	100 ± 20	120 ± 24
0,772	100 ± 10	
0,772 – 1	Not specified	
1	Not specified	120 ± 12

7.2.3 Attenuation

The attenuation of the cable shall be such that the requirements of 5.2 are met.

7.2.4 Near-end crosstalk (NEXT) loss

The NEXT loss for 100 m of cable shall be greater than 43 dB at frequencies up to 0,772 MHz and 41 dB at frequencies up to 1,0 MHz.

7.2.5 Insulation resistance

The insulation resistance of the cable shall be greater than 50 MΩ × km when measured at 20 °C and 500 V d.c. A measurement of the insulation resistance of existing cabling at 50 V d.c. can be used to indicate the likely presence of cable defects (see 9.5).

7.3 Connectors

The socket used to connect the terminal equipment to the cabling shall be in accordance with the connecting hardware recommended within ITU-T I.431. Alternatively, hard-wiring may be used.

NOTE – The connector plug recommended in ITU-T I.431 is not readily available. Subclause 8.2 provides information on connections to generic cabling which may also be used for dedicated cabling.

7.4 Cords

All cords used in the ISDN primary access connection shall consist of balanced cable (twisted pairs or quads) which meet the requirements of 7.2.

8 Implementation over generic cabling systems

8.1 General

The point-to-point configuration of clause 6 may need to be constructed over generic cabling systems which meet the requirements of ISO/IEC 11801. In generic cabling it is not intended to change the fixed parts of the cabling (e.g. sockets, cables). The terminal cords should not be hard-wired to the generic cabling system. Methods for connecting terminal equipment to generic cabling shall be in accordance with 8.2.

Figure 2 shows the typical hierarchical structure of generic cabling systems. When the NT is connected to the generic cabling it shall be located at the campus distributor, building distributor or floor distributor.

The copper cable types supported by ISO/IEC 11801 comprise 100 Ω, 120 Ω and 150 Ω balanced cables.

Where the cables used do not comply with the requirements of 7.2, it is recommended that system performance is ensured by the following means:

a) equipment manufacturers specification (recommended);

b) impedance matching components (preferred alternative);

c) observation over representative cabling. The use of bit error rate testing is recommended.

The requirements of 5.2 to 5.6 shall be fulfilled for the complete primary access connection, including ISDN primary access connections and generic cabling adapter, independent of the cable types used.

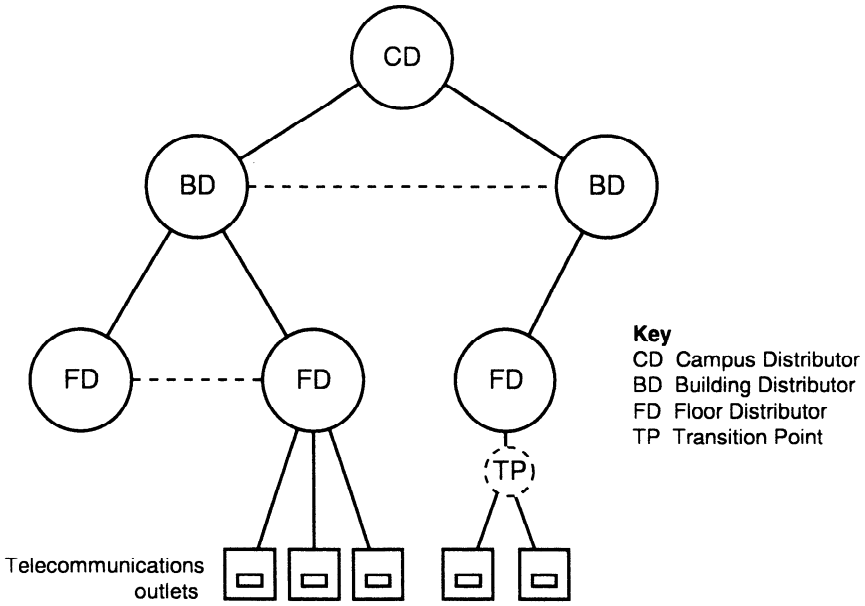

NT may be connected at CD, BD or FD

NOTE – Dotted lines denote optional connections, dotted circles denote optional elements.

Figure 2 – NT location in a generic cabling system

8.2 Connection of ISDN primary access to generic cabling

Figure 3a) shows a TE plugged directly into the generic cabling. Figure 3b) shows the use of a cord with different plugs on each end to make the connection. Figure 3c) shows the use of a generic cabling adapter to provide ISDN primary access.

Such an adapter consists of

- a plug which matches the telecommunications outlet of the generic cabling;
- an optional cord conforming to 8.3;
- an optional socket or plug conforming to 7.3;
- an optional impedance matching device.

The requirements in 5.2 to 5.6 shall be fulfilled for the complete primary access connection including the ISDN primary access generic cabling adapter. This shall be fulfilled even if cables with impedance other than those recommended for the data rates shown in table 1 are used (note the additional insertion loss due to reflection points at impedance discontinuities).

For the cable types supported by ISO/IEC 11801, the pin assignments of table 2 shall be used.

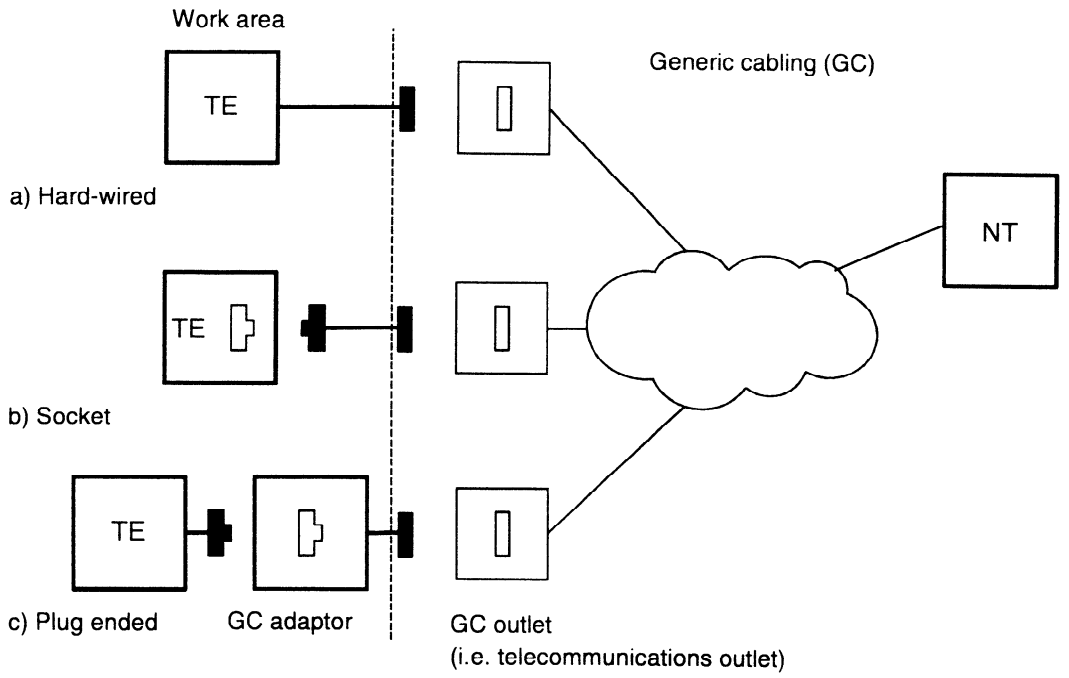

Figure 3 – Means of connection of ISDN primary access to generic cabling

Table 2 – Pin allocation of connecting hardware

Item	Cable type	
	100 Ω, 120 Ω	150 Ω
Connecting hardware	IEC 60603-7[a)]	IEC 60807-8[b)]
Receive pair (input to TE)	Pins 1 and 2	Pins G and R
Transmit pair (output from TE)	Pins 5 and 4	Pins B and O
Power feeding negative (optional)	Pin 7	–
Power feeding positive (optional)	Pin 8	–

a) Screens shall not be connected to any of the pins at the telecommunications outlets.
b) The termination of screens is supported within the connector body.

8.3 Requirements for ISDN primary access generic cabling adapters

The cord shall conform to the requirements for cables in 7.2. The maximum length of the cord shall be 5 m. Terminating resistors shall not be present in adapters for primary access.

The socket of the ISDN primary access adapter shall conform to the requirements in 7.3.

9 Qualification of existing cabling

9.1 General

In order to ensure the operation of a primary access channel over unknown existing cabling, it is necessary to verify the performance and configuration of the cabling by one or more of the following:

- reference to design information;
- direct measurement;
- indirect measurement.

The parameters to be established include:

- absence of spurs;
- continuity and cabling polarity;
- screen continuity where applicable;
- characteristic impedance (return loss);
- insertion loss;
- insulation resistance;
- near-end crosstalk (NEXT) loss.

9.2 Spurs

The presence and position of spurs can be determined by visual means or by the use of either a time domain reflectometer or a pulse echo meter. All spurs shall be removed (see 5.5).

9.3 Cabling integrity

The cabling shall be checked for correct pin and pair assignment at all interfaces.

9.4 Characteristic impedance

The installed cable should comply with 7.2. Where evidence of compliance is not available, the return loss of the cabling shall be greater than 10 dB at frequencies up to 1,0 MHz.

9.5 Insertion loss

Insertion loss shall be measured at

- 0,772 MHz with 100 Ω non-reactive source and load impedances for 1,544 Mbit/s transmission rate;
- 1,024 MHz with 120 Ω non-reactive source and load impedances for 2,048 Mbit/s transmission rate.

The insertion loss shall not exceed the value specified in 5.2.

9.6 Insulation resistance

The condition of cabling may be uncertain. Where cabling is suspected to have suffered mechanical damage or have been exposed to a hostile environment, an insulation resistance measurement should give an indication of possible damage. The insulation resistance shall be in accordance with 7.2.5. The test voltage shall be chosen to avoid dangerous voltages appearing at unknown points in the network. This is normally achieved by using a test voltage of 50 V.

9.7 Near-end crosstalk (NEXT) loss

The installed cable should comply with 7.2. Where evidence of compliance is not available, the near-end crosstalk (NEXT) loss of the cabling shall be greater than 25 dB at frequencies up to 1,0 MHz.

This page intentionally left blank

Standards Survey

We at the IEC want to know how our standards are used once they are published.

The answers to this survey will help us to improve IEC standards and standard related information to meet your future needs

Would you please take a minute to answer the survey on the other side and mail or fax to:

Customer Service Centre (CSC)
International Electrotechnical Commission
3, rue de Varembé
Case postale 131
1211 Geneva 20
Switzerland

or

Fax to: CSC at +41 22 919 03 00

Thank you for your contribution to the standards making process.

A Prioritaire

Nicht frankieren
Ne pas affranchir

Non affrancare
No stamp required

RÉPONSE PAYÉE

SUISSE

Customer Service Centre (CSC)
International Electrotechnical Commission
3, rue de Varembé
Case postale 131
1211 GENEVA 20
Switzerland

1.

No. of IEC standard:

.....

2.

Tell us why you have the standard. (check as many as apply). I am:

- ☐ the buyer
- ☐ the user
- ☐ a librarian
- ☐ a researcher
- ☐ an engineer
- ☐ a safety expert
- ☐ involved in testing
- ☐ with a government agency
- ☐ in industry
- ☐ other.....

3.

This standard was purchased from?

.....

4.

This standard will be used (check as many as apply):

- ☐ for reference
- ☐ in a standards library
- ☐ to develop a new product
- ☐ to write specifications
- ☐ to use in a tender
- ☐ for educational purposes
- ☐ for a lawsuit
- ☐ for quality assessment
- ☐ for certification
- ☐ for general information
- ☐ for design purposes
- ☐ for testing
- ☐ other.....

5.

This standard will be used in conjunction with (check as many as apply):

- ☐ IEC
- ☐ ISO
- ☐ corporate
- ☐ other (published by.....)
- ☐ other (published by.....)
- ☐ other (published by.....)

6.

This standard meets my needs (check one)

- ☐ not at all
- ☐ almost
- ☐ fairly well
- ☐ exactly

7.

Please rate the standard in the following areas as (1) bad, (2) below average, (3) average, (4) above average, (5) exceptional, (0) not applicable:

- ☐ clearly written
- ☐ logically arranged
- ☐ information given by tables
- ☐ illustrations
- ☐ technical information

8.

I would like to know how I can legally reproduce this standard for:

- ☐ internal use
- ☐ sales information
- ☐ product demonstration
- ☐ other.....

9.

In what medium of standard does your organization maintain most of its standards (check one):

- ☐ paper
- ☐ microfilm/microfiche
- ☐ mag tapes
- ☐ CD-ROM
- ☐ floppy disk
- ☐ on line

9A.

If your organization currently maintains part or all of its standards collection in electronic media, please indicate the format(s):

- ☐ raster image
- ☐ full text

10.

In what medium does your organization intend to maintain its standards collection in the future (check all that apply):

- ☐ paper
- ☐ microfilm/microfiche
- ☐ mag tape
- ☐ CD-ROM
- ☐ floppy disk
- ☐ on line

10A.

For electronic media which format will be chosen (check one)

- ☐ raster image
- ☐ full text

11.

My organization is in the following sector (e.g. engineering, manufacturing)

.....

12.

Does your organization have a standards library:

- ☐ yes
- ☐ no

13.

If you said yes to 12 then how many volumes:

.....

14.

Which standards organizations published the standards in your library (e.g. ISO, DIN, ANSI, BSI, etc.):

.....

15.

My organization supports the standards-making process (check as many as apply):

- ☐ buying standards
- ☐ using standards
- ☐ membership in standards organization
- ☐ serving on standards development committee
- ☐ other.....

16.

My organization uses (check one)

- ☐ French text only
- ☐ English text only
- ☐ Both English/French text

17.

Other comments:

.....

.....

.....

.....

.....

.....

18.

Please give us information about you and your company

name: .....

job title:.....

company: .....

address:.....

.....

.....

.....

No. employees at your location:.....

turnover/sales:.....

Enquête sur les normes

La CEI se préoccupe de savoir comment ses normes sont accueillies et utilisées.

Les réponses que nous procurera cette enquête nous aideront tout à la fois à améliorer nos normes et les informations qui les concernent afin de toujours mieux répondre à votre attente.

Nous aimerions que vous nous consacriez une petite minute pour remplir le questionnaire joint que nous vous invitons à retourner au:

Centre du Service Clientèle (CSC)
Commission Electrotechnique Internationale
3, rue de Varembé
Case postale 131
1211 Genève 20
Suisse
Télécopie: IEC/CSC +41 22 919 03 00

Nous vous remercions de la contribution que vous voudrez bien apporter ainsi à la Normalisation Internationale

A Prioritaire

Nicht frankieren
Ne pas affranchir

Non affrancare
No stamp required

RÉPONSE PAYÉE

SUISSE

Centre du Service Clientèle (CSC)
Commission Electrotechnique Internationale
3, rue de Varembé
Case postale 131
1211 GENÈVE 20
Suisse

.

Numéro de la Norme CEI:

.....

2.

Pourquoi possédez-vous cette norme? plusieurs réponses possibles). Je suis:

- ☐ l'acheteur
- ☐ l'utilisateur
- ☐ bibliothécaire
- ☐ chercheur
- ☐ ingénieur
- ☐ expert en sécurité
- ☐ chargé d'effectuer des essais
- ☐ fonctionnaire d'Etat
- ☐ dans l'industrie
- ☐ autres .....

3.

Où avez-vous acheté cette norme?

.....

4.

Comment cette norme sera-t-elle utilisée? (plusieurs réponses possibles)

- ☐ comme reférence
- ☐ dans une bibliothèque de normes
- ☐ pour développer un produit nouveau
- ☐ pour rédiger des spécifications
- ☐ pour utilisation dans une soumission
- ☐ à des fins éducatives
- ☐ pour un procès
- ☐ pour une évaluation de la qualité
- ☐ pour la certification
- ☐ à titre d'information générale
- ☐ pour une étude de conception
- ☐ pour effectuer des essais
- ☐ autres .....

5.

Cette norme est-elle appelée à être utilisée conjointement avec d'autres normes? Lesquelles? (plusieurs réponses possibles):

- ☐ CEI
- ☐ ISO
- ☐ internes à votre société
- ☐ autre (publiée par) .....)
- ☐ autre (publiée par) .....)
- ☐ autre (publiée par) .....)

6.

Cette norme répond-elle à vos besoins?

- ☐ pas du tout
- ☐ à peu près
- ☐ assez bien
- ☐ parfaitement

7.

Nous vous demandons maintenant de donner une note à chacun des critères ci-dessous (1, mauvais; 2, en-dessous de la moyenne; 3, moyen; 4, au-dessus de la moyenne; 5, exceptionnel; 0, sans objet)

- ☐ clarté de la rédaction
- ☐ logique de la disposition
- ☐ tableaux informatifs
- ☐ illustrations
- ☐ informations techniques

8.

J'aimerais savoir comment je peux reproduire légalement cette norme pour:

- ☐ usage interne
- ☐ des renseignements commerciaux
- ☐ des démonstrations de produit
- ☐ autres .....

9.

Quel support votre société utilise-t-elle pour garder la plupart de ses normes?

- ☐ papier
- ☐ microfilm/microfiche
- ☐ bandes magnétiques
- ☐ CD-ROM
- ☐ disquettes
- ☐ abonnement à un serveur électronique

9A.

Si votre société conserve en totalité ou en partie sa collection de normes sous forme électronique, indiquer le ou les formats:

- ☐ format tramé (ou image balayée ligne par ligne)
- ☐ texte intégral

10.

Sur quels supports votre société prévoit-elle de conserver sa collection de normes à l'avenir (plusieurs réponses possibles):

- ☐ papier
- ☐ microfilm/microfiche
- ☐ bandes magnétiques
- ☐ CD-ROM
- ☐ disquettes
- ☐ abonnement à un serveur électronique

10A.

Quel format serait retenu pour un moyen électronique? (une seule réponse)

- ☐ format tramé
- ☐ texte intégral

11.

A quel secteur d'activité appartient votre société? (par ex. ingénierie, fabrication)

.....

12.

Votre société possède-t-elle une bibliothèque de normes?

- ☐ Oui
- ☐ Non

13.

En combien de volumes dans le cas affirmatif?

.....

14.

Quelles organisations de normalisation ont publié les normes de cette bibliothèque (ISO, DIN, ANSI, BSI, etc.):

.....

15.

Ma société apporte sa contribution à l'élaboration des normes par les moyens suivants (plusieurs réponses possibles):

- ☐ en achetant des normes
- ☐ en utilisant des normes
- ☐ en qualité de membre d'organisations de normalisation
- ☐ en qualité de membre de comités de normalisation
- ☐ autres .....

16.

Ma société utilise (une seule réponse)

- ☐ des normes en français seulement
- ☐ des normes en anglais seulement
- ☐ des normes bilingues anglais/français

17.

Autres observations

.....

.....

.....

.....

.....

18.

Pourriez-vous nous donner quelques informations sur vous-mêmes et votre société?

nom .....

fonction .....

nom de la société .....

adresse .....

.....

.....

.....

nombre d'employés .....

chiffre d'affaires: .....

This page intentionally left blank

ISBN 2-8318-4385-5

ICS 33.080

Typeset and printed by the IEC Central Office
GENEVA, SWITZERLAND

© EAC 2005 — All rights reserved