US EAS 373

UGANDA STANDARD

First Edition
2006-11-14

External TV antennas in the frequency range 30 MHz to 1 GHz — Specification

Reference number
US EAS 373:2005

© UNBS 2006

Compliance with this standard does not, of itself confer immunity from legal obligations

A Uganda Standard does not purport to include all necessary provisions of a contract. Users are responsible for its correct application

© UNBS 2006

All rights reserved. Unless otherwise specified, no part of this publication may be reproduced or utilised in any form or by any means, electronic or mechanical, including photocopying and microfilm, without prior written permission from UNBS.

Requests for permission to reproduce this document should be addressed to

The Executive Director
Uganda National Bureau of Standards
P.O. Box 6329
Kampala
Uganda
Tel: 256 41 505 995
Fax: 256 41 286 123
E-mail: unbs@infocom.co.ug

Foreword

Uganda National Bureau of Standards (UNBS) is a parastatal under the Ministry of Tourism, Trade and Industry established, under Cap 327 of the Laws of Uganda. UNBS is mandated to co-ordinate the elaboration of standards and is

(a) a member of International Organisation for Standardisation (ISO) and

(b) a contact point for the WHO/FAO Codex Alimentarius Commission on Food Standards, and

(c) the National Enquiry Point on TBT/SPS Agreements of the World Trade Organisation (WTO).

The work of preparing Uganda Standards is carried out through Technical Committees. A Technical Committee is established to deliberate on standards in a given field or area and consists of representatives of consumers, traders, academicians, manufacturers, government and other stakeholders.

Draft Uganda Standards adopted by the Technical Committee are widely circulated to stakeholders and the general public for comments. The committee reviews the comments before recommending the draft standards for approval and declaration as Uganda Standards by the National Standards Council.

This Uganda Standard, US EAS 373, *External TV antennas in the frequency range 30 MHz to 1 GHz — Specification,* is identical with and has been reproduced from an East African Standard, EAS 373:2005, *External TV antennas in the frequency range 30 MHz to 1 GHz — Specification,* and adopted as a Uganda Standard.

For the purpose of this standard, the East African Standard text should be modified as follows:

a) Terminology

The words “this Uganda Standard” should replace the words “this East African Standard” wherever they appear.

b) References

The reference to East African Standards should be replaced by references to the appropriate Uganda Standards where they have been declared.

Committee membership

The following organisations were represented on the Technical Committee on Electrotechnolgy Standards (UNBS/TC 6) in the preparation of this standard:

- Physics Department, Makerere University Kampala – Chairman
- UMEME
- National Environment Management Authority
- Kampala City Traders Association (KACITA)
- Department of Electrical Engineering Kyambogo University
- Mantrac
- ABB Uganda
- Terrain Plant
- Car and General (U) Ltd
- Uganda National Bureau of Standards

EAS 373:2005
ICS 33.060.20

EAST AFRICAN STANDARD

External TV antennas in the frequency range 30 MHz to 1 GHz — Specification

EAST AFRICAN COMMUNITY

© EAC 2005

First Edition 2005

Table of contents

1 Scope 1
2 Referenced documents 1
3 Definitions 1
4 Measuring site 4
5 Methods of measurement 4
5.1 Gain 4
5.2 Operational Bandwidth 7
5.3 Reflection Coefficient 7
5.4 Directivity Protection 8
5.5 Cross-Polarization Protection 9
5.6 Beamwidth 9
6 Environmental tests 10
6.1 Salt Mist Test 10
6.2 Sulphur Dioxide Test 10
6.3 Weatherproofing 10
6.4 Vibration 11
7 Detailed specification sheet format 11
8 Performance requirement 11
9 Marking and packaging 12
Appendix A Details of a test range 18
Appendix B Driving rain test 19
B.1 Initial measurements 19
B.2 Pre-conditioning 19
B.3 Conditioning 19
B.4 Recovery 19
B.5 Final measurements 19
B.6 Information Required In The Relevant Specification 19
Annex C Example of aerial specification sheet as issued by the manufacturer 22

 © EAC 2005 — All rights reserved

Foreword

Development of the East African Standards has been necessitated by the need for harmonizing requirements governing quality of products and services in East Africa. It is envisaged that through harmonized standardization, trade barriers which are encountered when goods and services are exchanged within the Community will be removed.

In order to achieve this objective, the Partner States in the Community through their National Bureaux of Standards, have established an East African Standards Committee.

The Committee is composed of representatives of the National Standards Bodies in Partner States, together with the representatives from the private sectors and consumer organizations. Draft East African Standards are circulated to stakeholders through the National Standards Bodies in the Partner States. The comments received are discussed and incorporated before finalization of standards, in accordance with the procedures of the Community.

East African Standards are subject to review, to keep pace with technological advances. Users of the East African Standards are therefore expected to ensure that they always have the latest versions of the standards they are implementing.

© East African Community 2005 — All rights reserved*

East African Community

P O Box 1096

Arusha

Tanzania

Tel: 255 27 2504253/8

Fax: 255-27-2504481/2504255

E-Mail: eac@eachq.org

Web: www.each.int

* © 2005 EAC — All rights of exploitation in any form and by any means reserved worldwide for EAC Partner States' NSBs.

Introduction

This standard was necessitated due to the rapid growth of the TV industry as a result of the introduction of new channels. This has led to many individuals and groups of individuals not only using but also venturing into the manufacture of TV aerials.

The standard applies to linearly polarized aerials for domestic use and specifies conditions and methods of measurement applying to receiving aerials. In addition to the standard climatic tests, a driving rain test is included which, together with the industrial atmosphere tests, provides some assessment of how the aerial resists moisture and corrosion.

In the preparation of this standard, reference was made to the following documents:-

IEC 60597, *Aerials for reception of sound and TV broadcasting in the frequency range 30MHz to 1 GHz.*

IEC 60597-1, *Electrical and Mechanical properties.*

IEC 60597-2, *Methods of measurement of electrical performance parameters.*

IEC 60597-3, *Methods of measurement of mechanical properties and environmental tests.*

IEC 60597-4, *Guide for the preparation of aerial performance specifications and detailed specification sheet format.*

© EAC 2005 — All rights reserved

External TV antennas in the frequency range 30 MHz to 1 GHz — Specification

1 Scope

This standard specifies the performance requirements and methods of measurement of fixed receiving aerials, for domestic use, in the frequency range of 30MHz to 1GHz.

2 Referenced documents

The following documents are referred to in this standard:

IEC 60068-2-11, *Basic environmental Testing Procedures — Part 2: Test Ka — Salt mist.*

IEC 60068-2-6, *Basic Environmental Testing Procedures — Test Fc and Guidance — Vibration (Sinusoidal).*

IEC 60512-2, *Test 1a — Visual Examination.*

3 Definitions

For the purpose of this standard, the following definitions apply:

3.1
Receiving Aerial
That part of a radio receiving system which converts intercepted electromagnetic waves to guided radio frequency currents or fields in an associated transmission line.

NOTE The definition will normally include any impedance matching devices, baluns and integral active equipment.

3.1.1
Active receiving aerial
A receiving aerial incorporating an active device as an integral part essential to its proper functioning.

3.2
Gain
Ratio, expressed in decibels, of the power delivered to a resistive load equal to the nominal characteristic impedance of the transmission line, when the aerial is optimally oriented in the uniform field of a plane linearly polarized electromagnetic wave, to the power available from a correctly terminated half-wave dipole optimally oriented in the same electromagnetic wave field.

NOTES
1 Unless otherwise specified, the figure expressing the gain of an aerial refers to the gain in the direction of the main lobe. When the aerial is designed to receive from a direction other than that of the main lobe, the direction of the gain must be stated.

2 Gain may also be expressed relative to an aerial other that the correctly terminated half-wave dipole. In such cases, the term should be qualified, e.g. istropic gain.

3.3
Far-Field Region
That region of the electromagnetic field of an aerial where the angular field distribution is essentially independent of the distance from the aerial.

3.4
Directivity
Ratio, generally expressed in decibels, of the radiation intensity produced by an aerial in a given direction, to the value of the radiation intensities averaged in all directions in space.

NOTE 1 As the standard applies to receiving aerials rather than transmitting aerials, the definition should be understood as the ability of an aerial to discriminate between signals arriving from different directions.

NOTE 2 If no direction is specified, the direction of the maximum intensity is implied.

NOTE 3 The directivity is independent of aerial losses and equal to the absolute gain in the same direction if the aerial is loss-less.

© EAC 2005 — All rights reserved

This definition applies to the far-field region, i.e. at distances greater than $2b^2/\lambda$.

where:

b = the maximum dimension of the aerial

λ = the wavelength, b and λ being expressed in the same units.

3.4.1
Directivity protection
Ratio, in decibels, of maximum forward gain to the maximum minor lobe gain.

3.5
Cross-polarization protection
Ratio, in decibels, of the power received from an electromagnetic wave, linearly polarized in the desired plane of polarization and a stated direction, to the power received from an orthogonally polarized electromagnetic wave of the same amplitude and the same direction.

3.6
Beamwidth
The angular width in degrees of the major lobe in both E and H planes, respectively, between points at which the gain is 3 dB below maximum value.

3.7
Bandwidth
Extent of continuous range of frequencies over which an aerial characteristic or performance parameter conforms to a specified value.

3.7.1
Gain bandwidth
Frequency range over which the aerial gain does not vary by more than a specified amount.

3.7.2
Directive protection bandwidth
Frequency range over which directivity protection does not fall below a specified value.

3.7.3
Impedance bandwidth
The frequency range over which changes in aerial terminal impedance do not increase the magnitude of reflection coefficient or the Standing Wave Ratio (SWR) at the aerial terminal above a specified amount.

3.7.4
Cross-polarization protection bandwidth
The frequency range over which cross-polarization protection does not fall below a specified value.

3.7.5
Operating bandwidth
Frequency range over which the specified gain, directivity protection, impedance and when required, cross-polarization protection are maintained within specified limits.

3.8
Power Surface Density
Power transmitted per unit area of a surface normal to the direction of propagation.

3.9
Aerial Terminal
Means of providing connection between aerial and transmission line.

 © EAC 2005 — All rights reserved

3.10
Transfer Standard Aerial
A reference aerial of a closely reproducible, specified construction, having a gain and directivity greater than that of a half-wave dipole, which can be determined by calculation and sufficiently consistent for use as a transfer standard for aerial gain measurements.

3.11
Directivity Pattern
Graphical presentation, at a given frequency and in a specified plane, of the ratio between the output voltage (or current) to the maximum output voltage (or current) in the same plane, as a function of the angle of rotation, when the aerial is placed in a uniform electromagnetic field.

NOTE This is also known as a field strength directivity pattern.

3.12
Aerial Impedance
Characteristic impedance of the aerial as measured at the aerial terminals.

3.13
Reflection Coefficient
A measure of the reflected signal defined as a ratio of the reflected electromagnetic wave to the forward electromagnetic wave.

If the characteristic impedance of the aerial transmission line is equal to Z_0 an the aerial impedance is Z_a, the reflection coefficient (r) is given by:

$$r = \frac{Z_a - Z_0}{Z_a + Z_0}$$

Where:
Z_0 is equal to the resistive load which is equal to the nominal characteristic impedance of the aerial transmission line.

3.14
Return loss ratio (RLR)
The reciprocal of the magnitude of the reflection coefficient expressed in dB and given by the following formula:-

$$A = 20.\log\left(\frac{1}{|r|}\right)$$

3.15
Voltage standing wave ratio (VSWR)
The ratio of the maximum to the minimum voltage in a loss-less line of characteristic impedance (Z_o) connected to the aerial, related to the reflection coefficient (r) by the equation:

$$S = \frac{1+|r|}{1-|r|}$$

3.16
Feeder pick-up
Transfer of signal power in the outer surface of the outer conductor of a coaxial transmission line, or unbalanced signal power in the conductors of a symmetrical transmission line, through an aerial terminal in the transmission line as an unwanted signal component.

© EAC 2005 — All rights reserved

3.17
Phase centre
The location of a point associated with an aerial, such that, when taken as the centre of a sphere or a circle, the phase of a given field component in the far-field region remains essentially constant over that portion of the surface of the sphere or an arc of the circle where the radiation is significant.

NOTE Some aerials have more than one phase centre dependent on the plane containing the circle being considered.

4 Measuring site

A suitable measuring site shall be sufficiently large and its surroundings be substantially free of reflecting objects. It should be noted that the dimensions of the site should be comparatively large, particularly when measurements at lower frequencies are to be made or where high-gain, or physically large aerials are to be tested.

As given below, the far-field region, should be used.

NOTE 1 In the far-field region, the components of the electromagnetic field essentially represent a propagation of energy and their amplitudes decrease in proportion to the reciprocal of the aerial distance.

NOTE 2 If the aerial has a maximum dimension (b), which is large compared to the wavelength, the far-field region is commonly taken to exist at distances greater than $2b^2/\lambda$ from the aerial.

As an example, suitable test site is one which is free from reflecting objects up to a height of at least 2λ, within the perimeter of an ellipse having a major dimension twice the distance between foci and a minor dimension equal to $\sqrt{3}$ times this distance. The aerials under test are placed at each of the foci. It should be noted that the path of the ray reflected from an object on the perimeter of the ellipse is twice the length of the direct path between the foci (see figure 1).

5 Methods of measurement

5.1 Gain

By the law of reciprocity, an aerial (other than an active aerial) will exhibit equivalent characteristics whether it be tested as a receiving or as a transmitting aerial. Either method may be used when measuring gain and directivity.

Gain shall be measured by either the substitution method (see 5.1.1), method (a) or (b), or by the reciprocity (identical aerials) method (see 5.1.2).

5.1.1 Substitution method

a) The aerial, together with its mounting system, shall be placed on a site as indicated in Clause 4 and exposed to an incident plane electromagnetic wave, having a polarization corresponding to the design of the aerial. The aerial output power delivered to the specified resistive load shall be compared with the power from a substituted reference dipole or transfer standard aerial.

b) The aerial, together with its mounting system, shall be placed on a site as indicated in Clause 4 - and connected to a radio frequency source with an impedance equal to the specified resistive load. To produce a certain field strength at a distant receiving aerial, the power delivered to the terminals of this aerial, shall be compared with the power which must be supplied to a reference dipole or transfer standard aerial to produce the same field strength at the same distant receiving aerial.

In using methods (a) or (b), a resonant half-wave dipole will normally be used as a reference aerial in measuring gain, but it is frequently necessary to use a more directional aerial and this has been defined in **3.11**. A transfer standard aerial shall have accurately known and consistently reproducible gain, directivity and cross-polarization characteristics. It shall be completely specified in dimensional working drawings, with full mechanical specification to permit it to be reproduced whenever required.

 © EAC 2005 — All rights reserved

Where an unbalanced transmission system is used, a suitable balance to unbalance transformation shall be made between the dipole and the transmission system; the transformation loss shall be taken into account.

The magnitude of the reflection coefficient of the reference aerial to the transmission system shall not exceed 0.1 dB at the measuring frequencies.

5.1.2 Reciprocity method

Two identical aerials of the type to be tested are necessary. One is used as the transmitting aerial and the other as the receiving aerial. Each aerial is mounted with its designed mounting system on a mast. During each measurement both aerials are at the same height above the ground, facing each other.

It can be shown that, provided that the influence of ground reflections is negligible, the measured loss between these two aerials is equal to:

$$A_s = \left(20 \log \frac{4\pi d}{\lambda} - 2G_i \right) \text{dB}$$

Where:

A_s = the measured loss, in decibels.

G_i = the gain relative to an isotropic aerial, in decibels.

D = the distance between the phase centres of the two aerials, in metres.

λ = the wavelength corresponding to the measuring frequency in metres.

G_d = the gain relative to a half-wave dipole, in decibels.

In practice, d can be assumed to be approximately equal to the distance between the feed-points of the two aerials. The gain relative to an isotropic aerial can therefore be evaluated from a loss measurement as follows:

$$G_i = \left(10 \log \frac{4\pi d}{\lambda} - \frac{A_s}{2} \right) \text{dB}$$

Relative to a half-wave dipole, the gain will be :

$$G_d = \left(10 \log \frac{4\pi d}{\lambda} - \frac{A_s}{2} - 2.15 \right) \text{dB}$$

Dipole and transfer standard aerials used in gain measurements shall preferably be placed with their feed points in the same position as the feed point of the aerial under measurement. Where this is impracticable, a more suitable point may be chosen, but in all cases the point chosen shall be stated in the results of the measurement.

Whenever possible, the same transmission line system shall be used for the aerial and the reference aerial. The attenuation of the transmission line system shall be taken into account at each measuring frequency — see note 3 of **5.3.2**.

To ensure system stability during measurement, the following should be done:

a) When using the aerial under test for receiving, a receiving monitor aerial should be used and placed in such a position that it does not alter the electromagnetic field on the aerial under test (see figure 2).

© EAC 2005 — All rights reserved

b) When using the aerial under test for transmitting, a transmitting monitor aerial should be used and placed in such a position that it does not alter the electromagnetic field on the aerial under test (see figure 2).

The aerial to be measured shall be connected to the measuring device or to the radio-frequency generator by means of a transmission system, matched for a reflection coefficient, at the aerial terminals, of a magnitude less than 0.1 referred to the specified resistive load.

In making measurements of gain or cross-polarization protection by the reciprocity method, using a pair of identical aerials, the following additional precautions shall be observed in preparing the measuring site, and the aerials for test.

The aerials to be measured shall be mounted with their designed mounting on two identical (e.g. Telescopic) masts facing each other. The heights of the aerials above the ground shall be adjustable and calibrated so that both aerials are at the same height above the ground. The minimum height above the ground shall be at least 2λ.

The distance, d, between the two aerials shall be known and shall be at least 3λ or $4b^2/\lambda$, whichever gives the largest value; b is the largest dimension of the aerial and, λ, the wavelength corresponding to the measuring frequency. Distances and heights shall be stated with the results, whereas the chosen phase centre shall be shown in the relevant drawing of the aerial.

The influence of ground reflection on gain measurement may be assessed by simultaneously varying the height of the aerial above the ground from a minimum value of 2λ and observing the relative voltage variation, corresponding to signal strength, as a function of the height of the aerials.

The chosen height shall be regarded as satisfactory if these variations are within ± 1 dB at frequencies below 300 MHz and within ± 0.5 dB at frequencies above 300 MHz.

In making gain measurements by the reciprocity method using two identical aerials, the loss between the two aerials may be measured in various ways depending on the available measuring apparatus.

a) In figure 3 (page 15), the total attenuation including attenuation insertion loss must be known. The aerial cables with lengths L_1, L_2, L_3, and L_4 are of the same type and $L_1 + L_2 = L_3 + L_4$ so that their attenuation in the two switch position is the same. For both positions of the switches, S, the impedance offered to both aerials shall have a value which gives rise to a reflection coefficient with magnitude less than 0.1 relative to the specified resistive load for which the aerial has been designed. R is a receiver with a signal strength indicator and G is a signal generator. Both are tuned to the frequency at which the gain is to be measured. It is necessary to match the impedance of R and G and both sides of attenuator A to the cables, the magnitude of the reflection coefficient being less than 0.1. The attenuator A is adjusted until the receiver indicator reads the same in both positions of the switch S. The attenuation as read on the attenuator scale and expressed in decibels is equal to the measured loss.

b) In figure 4 and 5, the total attenuation in the circuits need not be known. the lengths of the cable, L_1 and L_2, are not critical because they have no influence on the measurement. However, the matching requirements are the same as under (a).

First, the aerial ends of the two cables are connected as in figure 4. For each measuring frequency, the attenuator A is adjusted until the receiver R indicates the same output for both positions of ht switches. Suppose the attenuator reads A, dB.

The aerials are then connected to the cables as in figure 5 and the attenuator (A) is again adjusted until the receiver (R) indicates the same output for both positions of the switches. Suppose the attenuator setting reads A_2 dB, the measured loss is:

$$As = (A_2 - A_1) \text{ dB.}$$

 © EAC 2005 — All rights reserved

For beamwidth measured as the angular width of the major lobe in both E and H plans, respectively between points at which the gain is 3dB below is maximum value.

5.2 Operational Bandwidth

The bandwidth of an aerial for the reception of sound and television broadcasting cannot be specified as a unique value. The same aerial may have a different bandwidth for each of the parameters for which bandwidth requires to be specified. Four separate definitions of bandwidth characteristics are given therefore under **3.7.1**, **3.7.2**, **3.7.3** and **3.7.4**, as well as the basic bandwidth in 3.7.

In general each of these parameters will cover a different range, therefore the operating bandwidth defined in **3.7.5**, should be specified to guide the user. All bandwidths shall be expressed by specifying their lower and upper frequencies in megahertz (MHz).

5.3 Reflection Coefficient

5.3.1 General

For most purposes, either the magnitude of the reflection or the standing wave ratio as a function of frequency for the range for which the aerial has been designed, will give sufficient information.

One may be derived from the other, or they may be independently determined from the aerial impedance either by calculation or by reading a Smith impedance chart. The same precautions as indicated in **5.3.2** shall be taken into account.

The reflection coefficient may be calculated from the measurements made by means of, e.g. a slotted line, frequency sweep method or reflectometer method.

5.3.2 Impedance and reflection coefficient measurement

To minimize the influence of large reflecting objects, including ground, on the impedance of the aerial, the distance from any point of the aerial under measurement at an angle θ to those objects shall be not less than:

$$C_1.G.e_\theta^2.\lambda$$

or

$C_2.b$

whichever is greater:

Where:

G = the gain, expressed as a numerical ratio, of the aerial under measurement, relative to a half-wave dipole.

θ = the angular displacement from the direction of the main lobe.

e_θ = the ratio between the induced voltage at angle x to the induced voltage at x = 0 which is the direction of the main lobe.

λ = the wavelength, in metres.

b = the largest dimension of the aerial under measurement in metres.

C_1 and C_2 are constants which depend on the accuracy desired (see table 1).

Table 1 indicates the values for C_1 and C_2, if the percentage of error, arising from the presence of large reflecting objects, is not to exceeded the value specified in the first column.

© EAC 2005 — All rights reserved

Table 1 — Percentage of error

Required accuracy %	C_1	C_2
10	1.2	0.5
5	2.4	0.8
3	4.0	1.3

NOTE 1 These values are not valid when resonance effects, caused by multiple surface reflections, occur in the space around the aerial.

NOTE 2 Care should be taken to ensure that small reflecting objects, such as measuring instruments, are placed far enough from the aerial under test.

NOTE 3 The transmission line, including the mounting system should be placed as specified by the manufacturer. Where no position is specified, the transmission line and the mounting system should be disposed in a manner which minimizes interaction with aerial.

The reflection coefficient is defined in Clause 3.13, for an aerial connected to a transmission line having the same nominal characteristic impedance as the design impedance of the aerial. It can be measured by the methods referenced above. The nominal design impedance of the aerial shall be stated in the specification sheet.

5.4 Directivity Protection

The directivity protection, as defined in **3.4.1** shall be determined from the directivity pattern made for the frequency range specified on a suitable site, as described in Clause 4.

The following applies to those measurements of gain and directivity for which the aerial to be measured is used as a receiving aerial.

To avoid errors in the measurements due to excessive variations in phase and amplitude in the space occupied by the aerial under test, the minimum distance between the aerials shall be determined from one of the two following requirements. The requirement which specifies the greater distance shall be met.

a) The variation in phase at the measuring site, in a plane perpendicular to the direction of propagation, occurring across a distance equal to the greatest physical dimension of the aerial under measurement, shall not exceed $\pi/8$ radians. To achieve this requirement, the distance between the two aerials shall be at least:

$$\frac{2\left(b_1^2 + b_2^2\right)}{\lambda}$$

Where:
b_1 and b_2 are the largest dimensions of the transmitting and receiving aerials respectively, and λ is the wavelength.

b) The swept volume occupied by the aerial when its mast is rotated shall be extended by at least on half wavelength in all directions and explored by a probe dipole no longer than on half wavelength and oriented for the polarization in use.

The magnitude of the electromagnetic field shall be maintained constant within ±0.5 dB at frequencies above 300 MHz over this swept volume.

NOTE Care shall be taken during this probing to ensure that the dipole is kept perpendicular to the direction of transmission and that the influence of cables and apparatus on the measurements is kept to a minimum.

The variation in observed signal level shall always be stated on the gain and directivity graphs; this could be done, as an example, by plotting on a graph the signal strength as a function of the height of the aerial (see figure 6, page 16). In this graph a straight line parallel to the abscissa can be drawn, representing the average value.

 © EAC 2005 — All rights reserved

Figure 6, gives two examples of curves which may be obtained, as follows:

6a) For the influence of the ground reflection being very noticeable;

6 (b) For the influence of the ground reflection being hardly noticeable over a certain part of the curve.

NOTE Errors may be caused by existing cross-polarization effects or be due go interaction between the aerial and its transmission line. Care should be taken to keep these effects to a minimum.

The ratio of response of the aerial under test to the direct wave and to the ground-reflected wave shall not exceed the corresponding ratio for the reference aerial by more than 0.5 dB for horizontal polarization and 1 dB for vertical polarization. The angle between the direct and the ground-reflected waves shall therefore be small enough to fulfil this condition, unless the following measures have been taken to reduce the ground-reflected wave:

i) The use of a transmitting aerial with high directivity in a vertical plane.

ii) The use of diffracting fences, between the transmitting aerial and the receiving aerial.

iii) The use of an angle of incidence at the ground corresponding to the pseudo-Brewster angle, in the case of vertical polarization; this angle is normally between 10º and 17º.

iv) The use of a slant range where the source aerial is placed near ground and the test aerial is elevated (see Annex A).

When directivity patterns are to be measured, it would be advantageous to use a transmitting aerial which has a high directivity in a horizontal plane to prevent the influence of reflections from surrounding objects.

Directivity protection is an important parameter when evaluating the ability of an aerial to reject co-channel interference and should be quantified in the aerial specification in relation to the class of service for which the aerial is required.

The upper three curves in figure 7 indicate the overall radiation envelope assumed for planning purposes.

To meet this requirement in built-up areas in the presence of interference from reflections, the performance of the receiving aerial measured with direct signals should be well within the limits indicated.

As an example of the aerial performance desirable to achieve good protection at the fringe of a UHV service is given at the bottom of curve in figure 7.

5.5 Cross-Polarization Protection

This characteristic is important in areas where orthogonal polarization is used to reduce co-channel interference. It will also reduce the unwanted effects of reflected signals.
The achievable discrimination will depend on the design of the aerial.

The level of cross-polar radiation in any azimuth direction should be at least 20 dB below the co-polar radiation in the direction of the main lobe. Lower cross-polar radiation, i.e. better cross-polarization protection, should be achievable except with very simple aerials.

5.6 Beamwidth

Under consideration

© EAC 2005 — All rights reserved

6 Environmental tests

6.1 Salt Mist Test

To determine the resistance of an aerial to deterioration from salt mist, the test shall be applied as described in IEC 60068-2-11, with the following variations: three spraying periods of 2h duration, each followed by a storage period of 22 h duration in the chamber shall be applied. A temperature of 35 ± 2ºC shall be used for both spraying and storage. The relative humidity during storage shall be 90% to 95%.

Where the aerial is too large to be tested in an available chamber, a test model can be made using standard production parts whose length alone is reduced as required to accommodate the aerial in the test chamber.

Evaluation shall be made by visual examination for traces of corrosion and by appropriate electrical measurements which are conducted before and after the test.

6.2 Sulphur Dioxide Test

The object of this test is to determine the resistance of electrical components and connections to an atmosphere containing sulphur dioxide and particularly to changes in electrical contact resistance in the circuit.

6.2.1 The test chamber shall comply with the requirements of IEC 68-2-11Error! Bookmark not defined..

6.2.2 Conditioning atmosphere

The composition of the atmosphere within the test chamber shall satisfy the following conditions:

Sulphur dioxide (SO_2)	$25 \pm 5 \times 10^{-6}$ (vol/vol)
Carbon dioxide (CO_2)	$4500 \pm 500 \times 10^{-6}$ (vol/vol)
Temperature	25 ± 2°C
Relative humidity	75 ± 5%

6.2.3 Test conditions

The test duration shall be 21 days in the atmosphere as specified in Clause 6.2.1.

Reduced size models may be used as described in **6.1** if necessary, and evaluation shall be made by visual examination for traces of corrosion and by making electrical contact resistance measurements on all electrical connections in the aerial array before and after the test.

6.3 Weatherproofing

A driving rain test shall be applied to the aerial or to a model as described in Annex B. The shower heads shall be located at a distance between 500 mm and 750 mm from the aerial component which is required to be weatherproof under this test.

Evaluation shall be as described in **B.5** of Annex B, by visual examination for traces of corrosion and by carrying out any appropriate electrical tests before and after conditioning.

 © EAC 2005 — All rights reserved

6.4 Vibration

Tests can be based where applicable on IEC 60068-2-6[9]. The following test parameters have been successfully used for performance evaluation and are put forward as a guide; other parameters giving equivalent acceleration stresses may be adopted as agreed between interested parties, but should be quantified in the relevant specification sheet.

6.4.1 Low-frequency high-amplitude vibration test

Frequency	under consideration
Maximum component amplitude -	under consideration
Test duration	under consideration

6.4.1.1 Procedure

The aerial under test is to be rigidly mounted on the vibration equipment. The input displacement is adjusted until the maximum amplitude of movement of some part of the aerial under test reaches the specified value.

NOTE This method will take into account the natural resonant frequency of any aerial component provided that, in setting up, the aerial is allowed to reach a dynamic equilibrium.

6.4.1.2 Evaluation

After the test, the aerial shall be examined according to IEC 60512-2 [10]. It should withstand the vibration test without any significant permanent component displacement and without any failure in any part.

6.4.2 High-frequency low-displacement vibration test

Frequency	under consideration
Maximum component amplitude -	under consideration
Test duration	under consideration

6.4.2.1 Procedure

As described in Sub-clause 6.4.1.1.

6.4.2.2 Evaluation

As described in sub-clause 6.4.1.2.

7 Detailed specification sheet format

To assist in providing uniformity of domestic aerial specifications a standard format given in Table 2 shall be used.

8 Performance requirement

The performance requirements shall be in accordance with Table 3. In case the connecting wire is made from a material different from that of the aerial, a suitable bimetallic connector shall be use in between to avoid voltaic corrosion.

---

[9] IEC 60068-2-6: Basic Environmental Testing Procedures, Test Fc and Guidance: Vibration (Sinusoidal), shall apply.
[10] IEC 60512-2, Test 1a: Visual Examination, shall apply.

© EAC 2005 — All rights reserved

9 Marking and packaging

The following information shall be marked on the aerial and package:

a) Hand/channel,
b) Impedance,
c) Gain, and
d) Manufacturer and/or trademark.

Table 2 — Aerial specification sheet

	Manufacturer	Frequency range
Aerial type	Model No.	Channel coverage

CONSTRUCTION

Dimensions			
Assembled		Packaged	
Overall length (mm)		Length (mm)	
Maximum width (mm)		Width (mm)	
Maximum height (mm)		Height (mm)	
Assembled mass (kg)		Total package mass/(kg)	
Accessories contained in the package			

ELECTRICAL SPECIFICATIONS

Tests		EAS Standard		Data
		Part	Clause	
Gain	(dB)			
Gain variation	(dB)			
E plane beamwidth	(degrees)			
K plane beamwidth	(degrees)			
Terminal impedance	(Ω)			
Reflection coefficient				
E plane directivity protection	(dB)			
H plane directivity protection	(dB)			
Cross-polarization protection	(dB)			
Impendance bandwidth	(MHz)			
Directivity-protection bandwidth	(MHz)			
Cross-polarization protection bandwidth	(MHz)			
Operating bandwidth	(MHz)			
Gain bandwidth	(MHz)			

Table 3 — Performance requirements

PARAMETERS	REQUIREMENTS
1. Nominal Impedance	a) 300 ohms balanced b) ohms unbalanced
2. Gain bandwith	Variation in gain within any single channel shall be within ± 2dB
3. Impedance bandwith	For variation of ± 20 per cent of the nominal impedance value, the bandwith shall cover the specified channels.
4. Cross-polarization protection bandwidth	Protection against a linearly polarized wave, whose polarization plane is perpendicular to that of the aerial, should be greater than 15 dB. This limit only applies to reception in the main lobe of the aerial.
5. Voltage standing wave ratio (VSWR)	a) Single channel aerial - ≤ 2.0 dB b) Multi channel aerial - ≤ 2.5 dB

 © EAC 2005 — All rights reserved

1 Test site

The test site shall be flat, free of overhead wires and nearly reflecting structures, sufficiently large to permit serial placement at the specified distance and provide adequate separation between aerial, test unit and reflecting structures. One such test site is depicted in Figure 1.

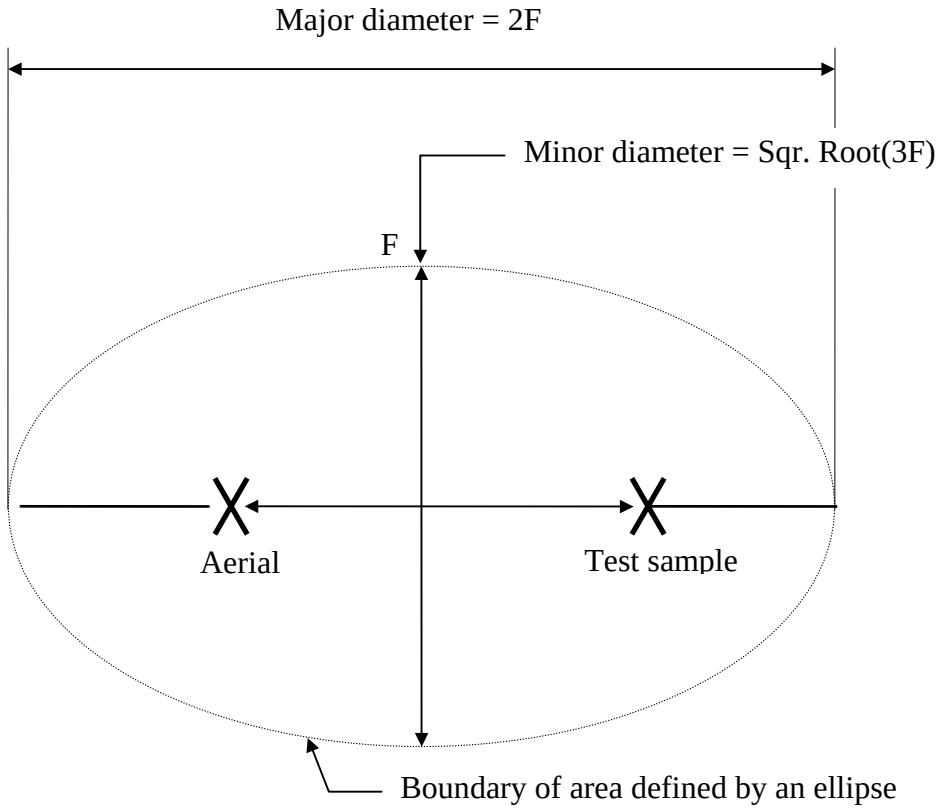

Figure 1 — Test site

© EAC 2005 — All rights reserved

Calibration arrangement

The additional attenuator shall be adjusted for equal receiver input voltage in both positions of the switch S.

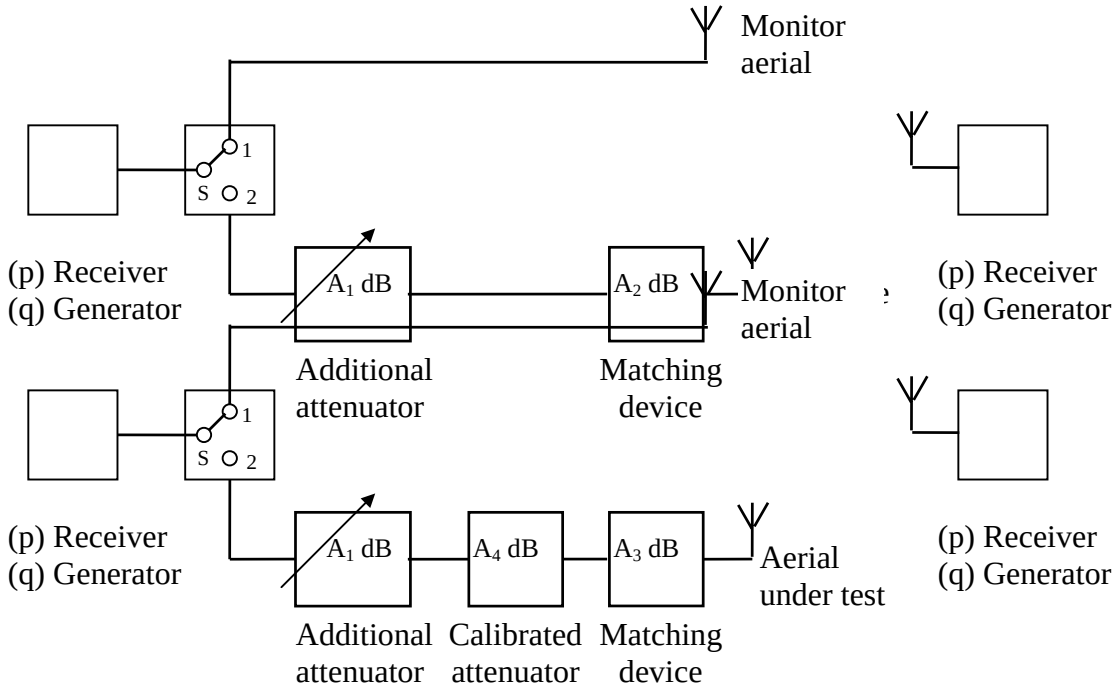

Measuring arrangements

Without altering the additional attenuator, the calibrated attenuator shall be adjusted for equal receiver input voltage in both positions of the switch S.

The gain is equal to $G = (A_4 - A_3 - A_2)$ dB

Figure 2 — Example of circuit arrangement for gain measurements, with the aerial under test used as a receiving aerial, disposition p, or as a transmitting aerial, disposition q.

 © EAC 2005 — All rights reserved

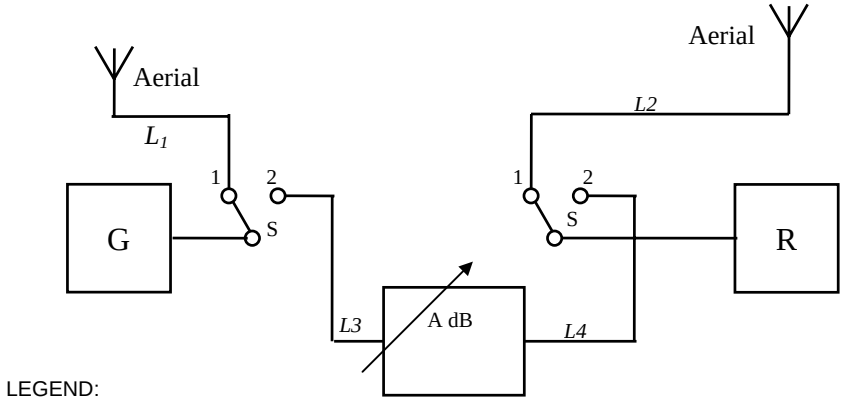

LEGEND:
G = signal generator
A = attenuator
R = receiver
S = radio-frequency switches

Figure 3 — Schematic circuit arrangement for measuring system loss.

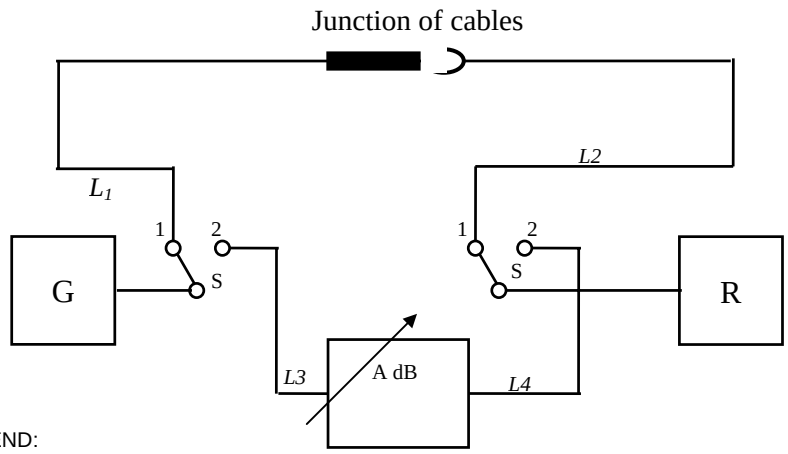

LEGEND:
G = signal generator
A = attenuator
R = receiver
S = radio-frequency switches

Figure 4 — Schematic circuit diagram for measuring cable attenuation

© EAC 2005 — All rights reserved

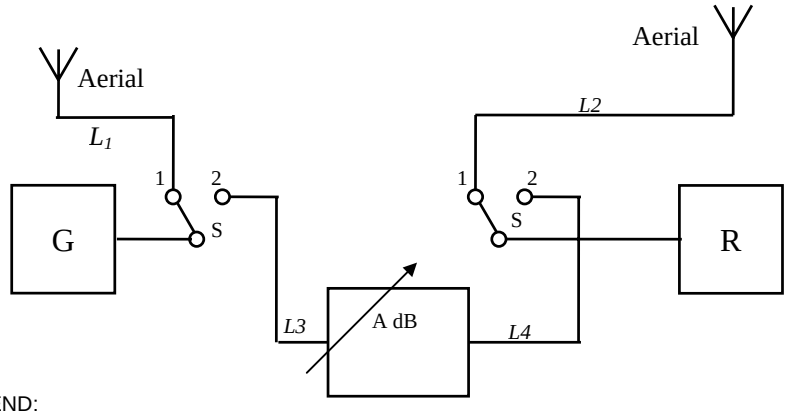

LEGEND:
G = signal generator
A = attenuator
R = receiver
S = radio-frequency switches

Figure 5 — Schematic circuit diagram for measuring system loss

(a)

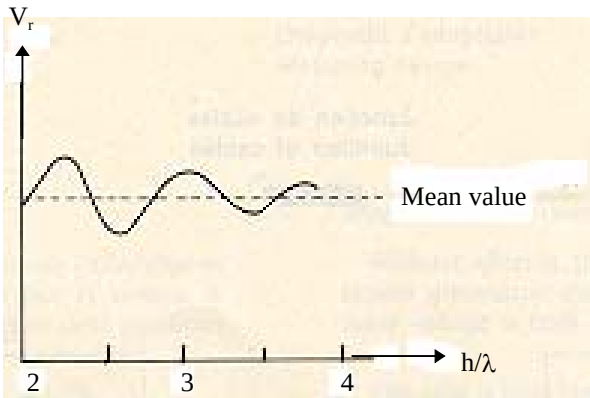

(b)

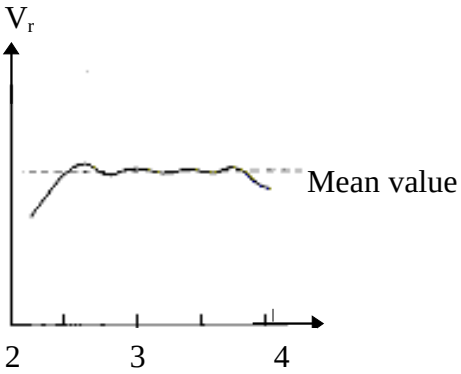

Figure 6 — Variation of the voltage v_r with the relative height h/λ

© EAC 2005 — All rights reserved

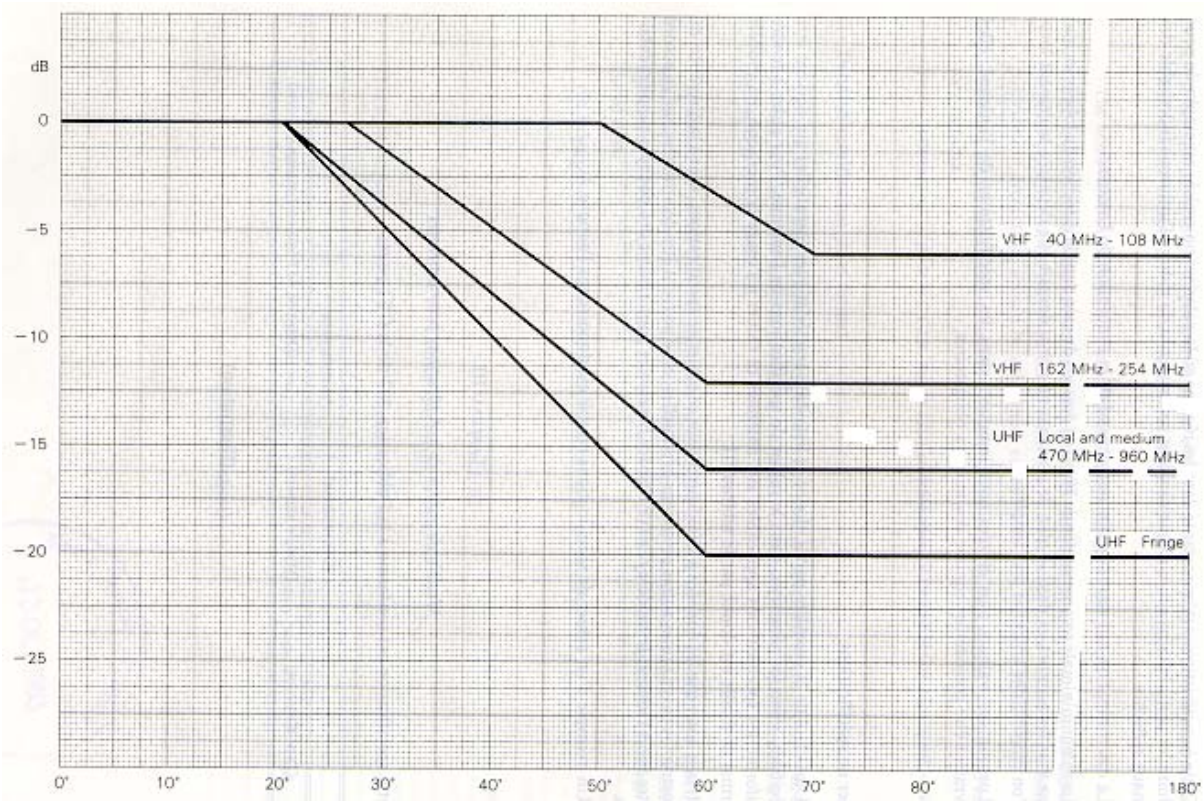

Figure 7 — Aerial radiation pattern envelope.

© EAC 2005 — All rights reserved

Annex A
Details of a test range

A typical arrangement for radiation pattern measurement is shown in figure A.1. Three possible types of test range are described as follows:

a) Ground-level range — is a range where both aerials are close to the ground. The source and test aerial heights, h_s and h_a in figure A.1, are adjusted in order that the resultant field of the source aerial and its image are substantially uniform at the test aerial.

b) Elevated range — is a range where both the aerial under test and the source are elevated sufficiently to place a minimum lobe of the source aerial pattern at the reflection point, simultaneously aligning the main lobe axes of both aerials. The two heights, h_a and h_s in figure A.1 are generally equal.

c) Slant range — is a range where the source aerial is placed near the ground and the aerial under test is placed at an elevated point. The angle $\propto$ in figure A.1 is in the order of tens of degrees.

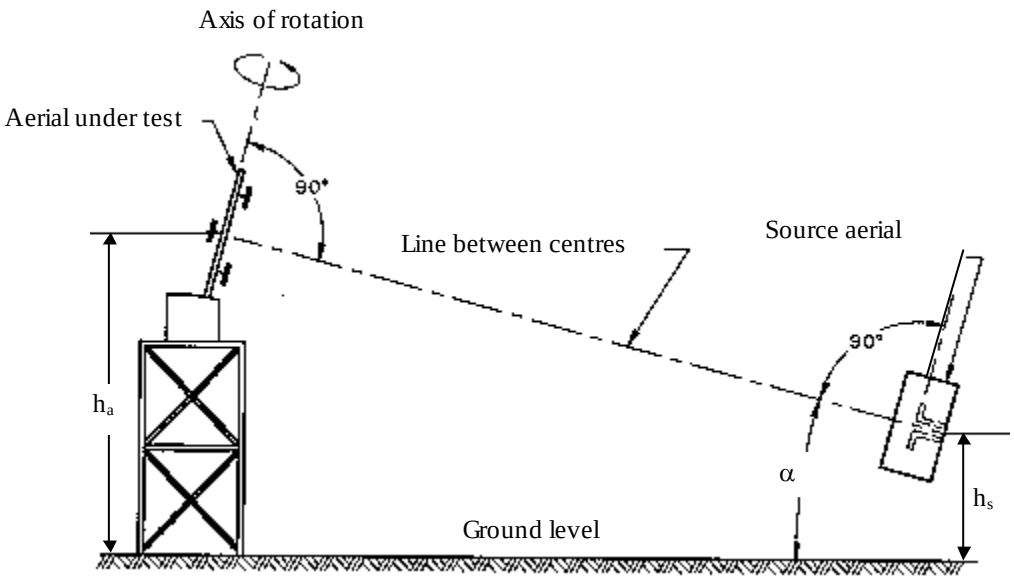

Figure A.1 — Test range

 © EAC 2005 — All rights reserved

Appendix B
Driving rain test

B.1 Initial measurements

The aerial shall be visually inspected and electrically and mechanically checked as required by the relevant specification.

All sealing features shall be checked as to whether they have been mounted correctly.

B.2 Pre-conditioning

Pre-conditioning of the aerials and seals shall be carried out if required.

B.3 Conditioning

B.3.1 The aerials shall be subjected to a shower of tap water from eight shower heads. The water from four of the shower heads shall be directed downwards at an angle of 45º at each of the four uppermost corners of the aerial under test. The water from the remaining four shower heads shall be directed horizontally to the most vulnerable spot of the area of each of the four sides.

The shower heads shall be located at a distance of 500 mm to 750 mm from the corners of sides of the aerial under test.

The dimensions of the shower head shall be in accordance with figure B.1; this will provide a cone angle of approximately 35º (see figure B.2).

NOTE Use of this head will lead water consumption of approximately 450 l/h with an overpressure of 20 N/cm².

The aerials shall be exposed to the rain for a period of 1 h.

The aerials shall be subjected to the test in their normal mounting position, unless otherwise specified.

If required, the aerials shall be operating during conditioning.

B.4 Recovery

The external surfaces of the aerials shall be dried by wiping or by applying a blast of air at room temperature, unless otherwise specified.

B.5 Final measurements

The aerials shall be examined for undue penetration of water and be visually inspected and electrically and mechanically checked as required.

The presence of the shower heads may modify the aerials performance; if any of the radio frequency tests are required, the shower heads shall be removed.

B.6 Information Required In The Relevant Specification

Where the test is included in the relevant specification, the following details shall be given as far as they are applicable.

a) Electrical and mechanical checks prior to conditioning.

b) Pre-conditioning procedure.

c) Distance between shower heads and aerials during conditioning.

© EAC 2005 — All rights reserved

d) Mounting position during conditioning.

e) Operating conditions.

f) Electrical and mechanical checks after recovery.

g) Allowable limits of water penetration.

h) Any deviation in procedure.

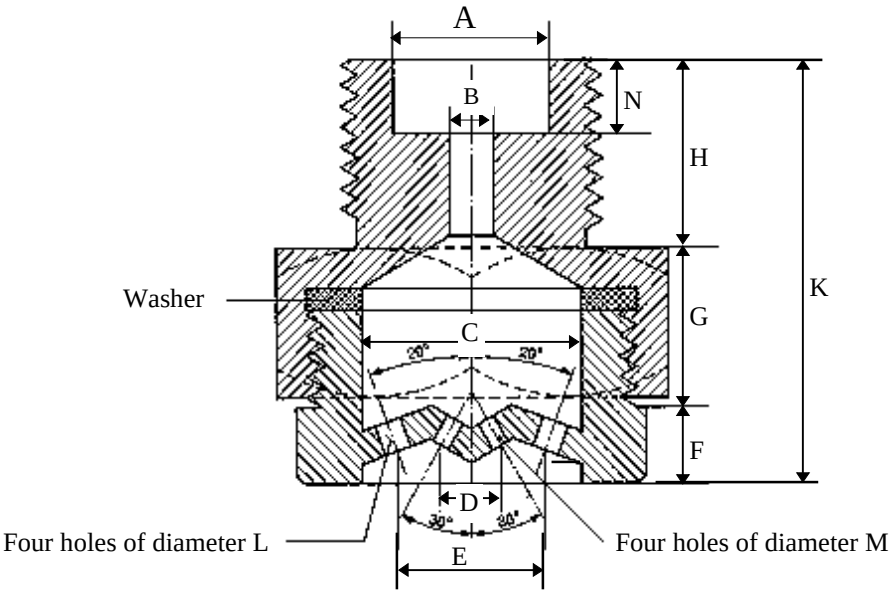

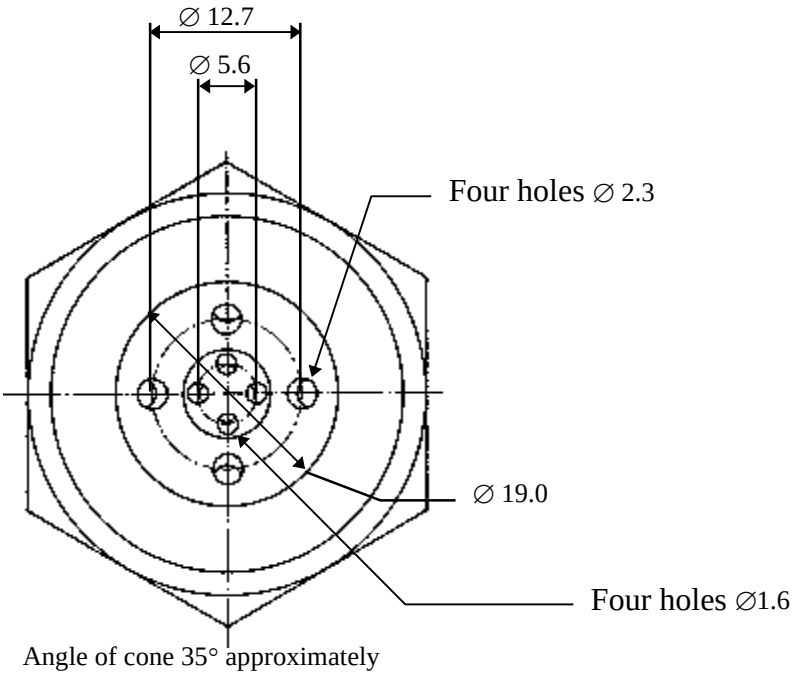

Reference	A	B	C	D	E	F	G	H	K	L	M	N	P
mm	13.5	3.8	19.0	5.6	12.7	6.35	13.5	15.9	35.7	2.3	1.6	6.35	1.0

DIMENSIONS IN MILLIMETRES

Figure B.1 — Dimensions of shower head

 © EAC 2005 — All rights reserved

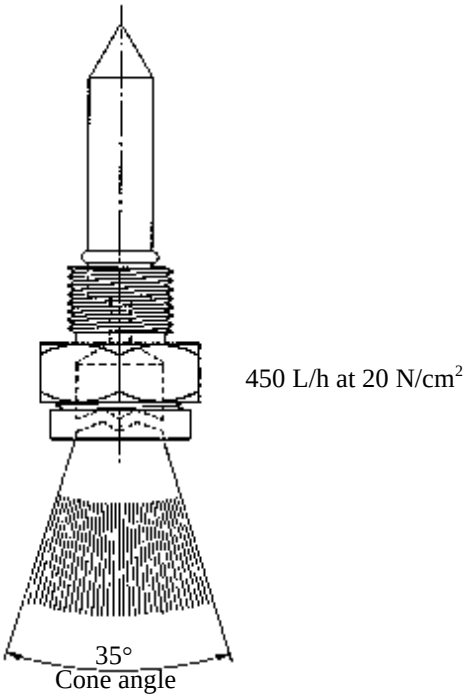

Figure B.2 — Shower head showing 35º coverage

© EAC 2005 — All rights reserved

Annex C
Example of aerial specification sheet as issued by the manufacturer

Table C.1.1

(Manufacturer)		
UHF Yagi 28/30	Model YR 04	526 547 MHz

(Illustration)

Table C.1.2 — construction

Dimensions			
Assembled		Packaged	
Overall length (mm)	730	Length (mm)	800
Maximum width (mm)	330	Width (mm)	150
Maximum height (mm)	280	Height (mm)	150
Assembled mass (kg)	0.95	Total package mass (kg)	16
Accessories contained in the package		Assemble tools	

Table C.1.3 — Electrical specifications

Tests		Data
Gain	(dB)	13
Gain variation	(dB)	1.5
E plane beamwidth	(degrees)	35
H plane beamwidth	(degrees)	31
Nominal impedance	(Ω)	75
Reflection coefficient		0.43
E plane directivity protection	(dB)	24
H plane directivity protection	(dB)	21
Cross-polarization protection	(dB)	26
Impedance bandwidth	(MHz)	526-548
Directivity protection bandwidth	(MHz)	525-547
Cross-polarization bandwidth	(MHz)	
Operating bandwidth	(MHz)	526-547
Gain bandwidth	(MHz)	526-549

© EAC 2005 — All rights reserved

© EAC 2005 — All rights reserved