US EAS 372-2

UGANDA STANDARD

First Edition
2006-11-14

Telecommunications installations — Specification — Part 2: Telecommunications pathways and spaces for commercial buildings

Reference number
US EAS 372-2:2005

© UNBS 2006

Compliance with this standard does not, of itself confer immunity from legal obligations

A Uganda Standard does not purport to include all necessary provisions of a contract. Users are responsible for its correct application

© UNBS 2006

All rights reserved. Unless otherwise specified, no part of this publication may be reproduced or utilised in any form or by any means, electronic or mechanical, including photocopying and microfilm, without prior written permission from UNBS.

Requests for permission to reproduce this document should be addressed to

The Executive Director
Uganda National Bureau of Standards
P.O. Box 6329
Kampala
Uganda
Tel: 256 41 505 995
Fax: 256 41 286 123
E-mail: unbs@infocom.co.ug

Foreword

Uganda National Bureau of Standards (UNBS) is a parastatal under the Ministry of Tourism, Trade and Industry established, under Cap 327 of the Laws of Uganda. UNBS is mandated to co-ordinate the elaboration of standards and is

(a) a member of International Organisation for Standardisation (ISO) and

(b) a contact point for the WHO/FAO Codex Alimentarius Commission on Food Standards, and

(c) the National Enquiry Point on TBT/SPS Agreements of the World Trade Organisation (WTO).

The work of preparing Uganda Standards is carried out through Technical Committees. A Technical Committee is established to deliberate on standards in a given field or area and consists of representatives of consumers, traders, academicians, manufacturers, government and other stakeholders.

Draft Uganda Standards adopted by the Technical Committee are widely circulated to stakeholders and the general public for comments. The committee reviews the comments before recommending the draft standards for approval and declaration as Uganda Standards by the National Standards Council.

This Uganda Standard, US EAS 372-2, *Telecommunications installations — Specification — Part 2: Telecommunications pathways and spaces for commercial buildings,* is identical with and has been reproduced from an East African Standard, EAS 372-2:2005, *Telecommunications installations — Specification — Part 2: Telecommunications pathways and spaces for commercial buildings,* and adopted as a Uganda Standard.

For the purpose of this standard, the East African Standard text should be modified as follows:

a) Terminology

The words “this Uganda Standard” should replace the words “this East African Standard” wherever they appear.

b) References

The reference to East African Standards should be replaced by references to the appropriate Uganda Standards where they have been declared.

Committee membership

The following organisations were represented on the Technical Committee on Electrotechnolgy Standards (UNBS/TC 6) in the preparation of this standard:

- Physics Department, Makerere University Kampala – Chairman
- UMEME
- National Environment Management Authority
- Kampala City Traders Association (KACITA)
- Department of Electrical Engineering Kyambogo University
- Mantrac
- ABB Uganda
- Terrain Plant
- Car and General (U) Ltd
- Uganda National Bureau of Standards

EAS 372-2:2005
ICS 33.040.20

EAST AFRICAN STANDARD

Telecommunications installations — Specification —

Part 2:
Telecommunications pathways and spaces for commercial buildings

EAST AFRICAN COMMUNITY

© EAC 2005

First Edition 2005

Table of contents

1 Scope and general 1
1.1 Scope 1
1.2 Application 1
1.3 Referenced and related documents 1
1.4 Definitions 2
2 General conditions 7
2.1 General 7
2.2 Infloor 7
3 Backbone pathways 23
3.1 General 23
3.2 Intra-building pathways 23
3.3 Inter-building pathways 24
4 Workstation 27
4.1 General 27
4.2 Specific workstation pathways 27
4.3 Telecommunications outlets 28
5 Telecommunications closet 28
5.1 General 28
5.2 Design considerations 28
6 Equipment room 32
6.1 General 32
6.2 Design Considerations 33
7 Entrance facilities 36
7.1 General 36
7.2 Building site considerations 36
7.3 Service entrance pathway 37
7.4 Entrance point 46
7.5 Entrance room or space 47
8 Miscellaneous items 49
8.1 Earthing and bonding 49
8.2 Firestopping 49
8.3 Security 49
8.4 Miscellaneous pathways 49
8.5 Separation of pathway and space from electromagnetic energy sources 49
8.6 Bend radii for special cables (e.g. optical fibre) 50
Annex A (informative) — Additional section information 51
A.1 General 51
A.2 Telecommunications closet 51
A.3 Equipment room 52
A.4 Entrance facilities 52
A.5 Earthing 52

 © EAC 2005 — All rights reserved

Foreword

Development of the East African Standards has been necessitated by the need for harmonizing requirements governing quality of products and services in East Africa. It is envisaged that through harmonized standardization, trade barriers which are encountered when goods and services are exchanged within the Community will be removed.

In order to achieve this objective, the Partner States in the Community through their National Bureaux of Standards, have established an East African Standards Committee.

The Committee is composed of representatives of the National Standards Bodies in Partner States, together with the representatives from the private sectors and consumer organizations. Draft East African Standards are circulated to stakeholders through the National Standards Bodies in the Partner States. The comments received are discussed and incorporated before finalization of standards, in accordance with the procedures of the Community.

East African Standards are subject to review, to keep pace with technological advances. Users of the East African Standards are therefore expected to ensure that they always have the latest versions of the standards they are implementing.

© East African Community 2005 — All rights reserved*

East African Community

P O Box 1096

Arusha

Tanzania

Tel: 255 27 2504253/8

Fax: 255-27-2504481/2504255

E-Mail: eac@eachq.org

Web: www.each.org

* © 2005 EAC — All rights of exploitation in any form and by any means reserved worldwide for EAC Partner States' NSBs.

Introduction

This Standard recognizes three fundamental concepts related to telecommunications and buildings:

(a) Buildings are dynamic. During the life of a building, remodelling is more the rule than the exception. This Standard recognizes in a positive way that change takes place.

(b) Building telecommunications systems and media are also dynamic. Over the life of a building, both telecommunications equipment and media change dramatically. This Standard recognizes this fact by being as independent as possible from specific vendor equipment and media.

(c) Telecommunications is more than just voice and data. Telecommunications also encompasses many other building systems including environmental control, security, audio, television, sensors, alarms and paging. Indeed, telecommunications embraces all low voltage signal systems which convey information within buildings.

This Standard also recognizes a background precept of fundamental importance: In order to have a building successfully designed, constructed, and provisioned for telecommunications, it is imperative that the telecommunications design be incorporated during the preliminary architectural design phase.

Telecommunications has an impact on almost every area within and between commercial buildings. Because of this and the additional fact that a building's useful life may span many decades, it is very important that the design and construction of new or remodelled buildings minimize the likelihood of obsolescence. Doing it properly from the start means that the resulting building is responsive to the many normal changes that occur in both telecommunications media and systems over the life of the building.

In recognition of the above fundamental concepts, a principal goal is that this Standard is useful to those who matter most — building owners and occupants who would be compelled to live with the daily problems associated with buildings improperly designed and constructed to support telecommunications.

A properly designed and constructed facility is easily adapted to change during its life. Owners and occupants can assume that this Standard will be used for the construction of better facilities, and indeed, part of its expected usefulness is that it will be referenced in documents such as bid requests, specifications and contracts.

This Standard should also prove useful to architects, engineers and the construction industry. A good understanding of the Standard by this team will significantly reduce problems associated with the final product.

This Standard makes no specific recommendations among the design alternatives available for telecommunications pathways and spaces. For example, the choice between a conduit system and a tray system is not delineated. It is up to the telecommunications designer to properly select from the alternatives, based upon the applications at hand and the constraints imposed. Building owners and end users should ensure that qualified designers of telecommunications pathways and spaces are selected.

This Standard bears a close relationship to its companion Standard EAS 372-1.

 © EAC 2005 — All rights reserved

Telecommunications installations — Specification — Part 2: Telecommunications pathways and spaces for commercial buildings

1 Scope and general

1.1 Scope

The scope of this East African Standard is limited to the telecommunications aspects of commercial building design and construction, encompassing telecommunications considerations both within and between buildings. Telecommunications aspects in this context generally means the pathways into which telecommunications media are placed, and the rooms and areas associated with the building used to terminate cabling and accommodate associated telecommunications equipment.

The purpose of this Standard is to standardize specific design and construction practices, within and between (primarily commercial) buildings, which support telecommunications media and equipment. Standards are given for rooms or areas and pathways into and through which telecommunications equipment and media are installed.

Both architectural and telecommunications terminologies are freely used in this Standard, which may cause some difficulty to readers experienced in one area but perhaps not in the other. The reader can reduce confusion by remembering that this Standard does not standardize the media or equipment; it only standardizes the things within and between buildings into which telecommunications media and equipment are placed.

Although the scope is limited to the telecommunications aspect of building design, it should be recognized that this Standard highly influences the design of other building services, such as electrical power and HVAC (heating, ventilation and air-conditioning), and also impacts on space allocation within the building.

This Standard does not cover safety aspects of building design; the reader is directed to the relevant local safety and building codes.

The reader is reminded of the definition of 'telecommunications' as it relates to the scope of this Standard. Telecommunications encompasses all forms of information transport and processing, not just the traditional concerns for voice-only systems. Voice, data, video, control and audio are all telecommunications ingredients of a modern building.

1.2 Application

This Standard is intended to assist architects, planners, designers, engineers, builders, installers, maintenance personnel, building owners, managers and users in the planning of physical pathways and spaces in and between buildings to accommodate the equipment and cabling infrastructure necessary for communications.

Adherence to this Standard will facilitate, by standardizing the approach, the provisioning and maintenance of the comprehensive communications facilities and networks which are in ever-increasing demand, particularly by occupiers of commercial premises.

1.3 Referenced and related documents

1.3.1 Referenced documents

The following documents are referred to in this Standard:

ISO 9194: 1987, *Bases for design of structures — Actions due to self-weight of structures, non-structural elements and stored materials — Density*

© EAC 2005 — All rights reserved

ISO 2633: 1974, *Determination of imposed floor loads in production of buildings and warehouses*

ISO 4354: 1997, *Wind actions on structures*

IEC 60215, *Safety practices in the operation and maintenance of radio transmitters and similar equipment.*

ISO 6184, *Explosion protection systems — Combustible dusts, gases and liquids*

ISO 1049, *Application of cement lining to steel tubular goods, handling, installations and joining*

ISO 8375, *Solid timber in structural sizes — Determination of some physical and mechanical properties.*

ISO 10721: 1997*, Steel structures — Materials and Design*

ISO 3010, *Bases for design of structures — Seismic actions on structures*;

ISO 4866, *Mechanical shock and vibration — vibration of buildings — Guidelines for the measurement of vibrations and evaluation of their effects on buildings.*

ISO 8569, *Mechanical shock and vibration — Measurement and evaluation of shock and vibration effects on sensitive equipment in buildings.*

ISO 9688, *Mechanical vibration and shock — analytical methods of assessing shock resistance of mechanical systems — Information exchange between suppliers and users.*

ISO 10137, *Bases for design of structures — Serviceability of buildings against vibration*.

EAS 372-1, *Telecommunications installations — Part 1: integrated communications cabling systems for commercial premises*

1.4 Definitions

Terms defined herein are those needing a separate definition outside the text, where the terms are used and are not of general usage or explained in a recognized dictionary.

NOTE Figure 1 illustrates the relationship between the major telecommunications pathway and space elements within a building.

1.4.1
Access floor
A system of flooring consisting of completely removable and interchangeable floor panels which are supported on adjustable pedestals or stringers (or both) to allow access to the area beneath.

1.4.2
Access hole

A chamber permitting access to cabling and joints.

1.4.3
Aerial cable
Telecommunication cable installed on aerial supporting structures such as poles, sides of buildings, and other structures.

 © EAC 2005 — All rights reserved

1.4.4
Alternate entrance
A supplementary service entrance facility into a building using a different routing to provide diversity of service and for assurance of service continuity.

1.4.5
Antenna entrance
A pathway facility to the associated entrance room.

1.4.6
Backbone pathways
One or more backbone facilities may exist within the building. These are generally formed by vertically stacking communications closets with floor openings between them. Tie pathways may also exist to install backbone media between closets. (See Section 3.) See **1.4.32** also for inter-building backbone.

1.4.7
Bend
A large-radius curved member (an elbow is not considered a bend).

1.4.8
Bonding
The permanent joining of metallic parts to form an electrically conductive path which will assure electrical continuity.

1.4.9
Bund
An embankment, a raised surround.

1.4.10
Cabinet
A container that may enclose connection devices, terminations, apparatus, wiring and equipment.

1.4.11
Cable
An assembly of one or more conductors, or optical fibres, within an enveloping sheath constructed so as to permit use of the conductors singly or in groups. See also 'aerial cable'.

1.4.12
Campus
The buildings and grounds of a complex; e.g. a university, college, industrial park or military establishment.

1.4.13
Catenary (integral bearer)
A strong element used to carry the weight of the telecommunications cable and wiring.

1.4.14
Ceiling distribution system
A distribution system that utilizes the interstitial space between a suspended or false ceiling and the structural surface above.

1.4.15
Closet
See 'telecommunications closet'.

© EAC 2005 — All rights reserved

1.4.16
Concrete rill
A minimal-depth concrete pour to encase single-level underfloor duct. Also material used to encase entrance conduit.

1.4.17
Conduit
A duct, trough or pipe for containing cables in order to protect them against damage.

1.4.18
Core area
That horizontal section of the building core set aside or used for utility service.

1.4.19
Cross-over
The junction unit at the point of intersection of two cable trays, or conduit (pathways) on different planes.

1.4.20
Device
As related to a workstation, a device is an item such as a telephone, personal computer or a graphic or video terminal.

1.4.21
Draw-box-
An enclosure providing access to the draw-wire(s).

1.4.22
Draw-wire
Cord or wire placed within a pathway and used to pull wire and cable through it.

1.4.23
Duct
A duct may be a single enclosed channel, with or without cover, for wires or cables. It may also be an enclosure in which air is moved. Generally part of the HVAC system of a building.

1.4.24
Earthing electrode
A conductor, usually a rod, pipe or plate (or group of conductors) in direct contact with the earth for the purpose of providing a low-impedance connection to the earth.

1.4.25
Emergency power
A stand-alone electrical supply source not dependent upon the primary electrical source.

1.4.26
Entrance facilities/Entrance room
This space, preferably a room, is the building-serving facility or space in which the joining of inter- and intra-building backbone facilities takes place. The service entrance room may also house electronic equipment serving any telecommunications function. (See clause 7.)

1.4.27
Equipment room
A room that serves the space needs for larger telecommunications equipment. (See clause 6.)

NOTE These are often special-purpose rooms. Equipment rooms are connected to the backbone facility.

 © EAC 2005 — All rights reserved

1.4.28
False ceiling
See 'suspended ceiling'.

1.4.29
Firestop
A material device or assembly of parts installed in a cable system in a fire-rated wall or floor to prevent passage of flame, smoke or gases through the rated barrier (e.g. between cubicles).

1.4.30
Floor slab
The upper part of a reinforced concrete floor which is carried on beams below.

1.4.31
Horizontal pathways
These facilities provide pathways for installation of media from the telecommunications closet, destined for the workstation telecommunications outlet. A horizontal pathway facility can be composed of several components including cable tray, conduit, underfloor, access floor, ceiling and perimeter systems.
(See Section 2.)

1.4.32
Inter-building backbone
Pathway facilities to the entrance room or space provided for interconnection to other buildings, as in a campus environment.

1.4.33
Monolithic pour
The single continuous pouring of a concrete floor and columns of any given floor of a building structure.

1.4.34
Pathway
A (cable) route between two locations. Any channel designed for holding wires or cables; e.g. conduits, ducts, electrical metallic tubing, sleeves, slots, troughs, trenches, trays and tunnels.

1.4.35
Penetration
An unlimited or random penetration through the fire resistant floor structure to permit the installation of electrical or communications cables.

1.4.36
Plenum
A space within the building, created by building components, designed for the movement of environmental air, e.g. a space above a suspended ceiling or below an access floor.

1.4.37
Post-tensioned concrete
A type of reinforced concrete construction in which the steel is put under tension and the concrete under compression after the concrete has hardened.

1.4.38
Riser
A vertical pathway for backbone cabling.

© EAC 2005 — All rights reserved

1.4.39
Service column
A pathway placed between the ceiling and floor in conjunction with ceiling distribution systems. It is used for the concealment of telecommunication and electrical wiring from the ceiling space to the work area. Synonyms: ceiling drop pole, power pole.

1.4.40
Service entrance
Pathway facilities to the entrance room or space allocated to service providers for the entrance facility. See 'telecommunications service entrance'.

1.4.41
Service Fitting
An outlet box to house the connections for telecommunications at the user workstation.

1.4.42
Slab on grade
Concrete floor placed directly on soil without basement or crawlspace.

1.4.43
Sleeve
An opening, usually circular, through the wall, ceiling or floor to allow the passage of cables and wires.

1.4.44
Slot
An opening, usually rectangular, through a wall, floor or ceiling to allow the passage of cables and wires.

1.4.45
Suspended ceiling
A ceiling that creates an area or space between ceiling material and the structure above. Synonyms: drop ceiling, false ceiling.

1.4.46
Telecommunications
Any transmission, emission or reception of signs, signals, writings, images and sounds or information of any nature by wire, radio, visual or other electromagnetic systems.

1.4.47
Telecommunications closet
A floor-serving enclosed space for housing telecommunications equipment, cable terminations and cross-connect wiring. The closet is the recognized transition point between the backbone and horizontal pathway facilities. (See clause 5.)

1.4.48
Telecommunications service entrance
The point at which telecommunications pathways enter or leave a building.

1.4.49
Topology
The physical or logical configuration of a telecommunications system, e.g. a local area network.

1.4.50
Transition point
A location where flat cable connects to round, conventional telecommunication wires or cables extending from the main terminals or closet.

 © EAC 2005 — All rights reserved

1.4.51
Trough
An open, surface-mounted channel typically provided to contain cabling.

1.4.52
Usable floor space
Floor space which is capable of being used as office space.

1.4.53
Work area
An area comprising one or more workstations.

1.4.54
Workstation
Where a user interacts with telecommunications terminal equipment. (See Section 4.)

2 General conditions

2.1 General

2.1.1 Horizontal pathways

Horizontal pathways are facilities for the installation of telecommunications cable from the telecommunications closet to the work area telecommunications outlets. Horizontal pathways encompass infloor, access floor, conduit, tray and duct, ceiling and perimeter facilities.

2.1.2 Bonding and earthing

Bonding and earthing of horizontal pathways shall comply with applicable electrical codes.

2.1.3 The pathway facility

The pathway facility shall be designed to handle all types of telecommunications cable (e.g. telephone, data, video). When determining the size of the pathway, the quantity and size of cables, with an allowance for growth, shall be considered.

2.1.4 Access

Where appropriate, access or hand-hole units shall be placed in duct runs to permit changes in direction and provide access for pulling wires.

2.2 Infloor

2.2.1 Infloor duct

Infloor duct systems are pathways for containing cables for services such as telecommunications and electrical power. The system, consisting of distribution (see **2.2.1.4**) and feeder (see **2.2.1.5**) ducts, is a network of pathways embedded in concrete. Ducts are usually rectangular in shape and are produced in many different sizes. The ducts may be used in single, double, or triple runs, or may be intermixed in combinations of large and small ducts to provide increased or decreased capacity. Distribution ducts are usually supplied with preset inserts. Ducts extending from the telecommunications closet and under passageways may be installed without inserts.

2.2.1.1 Types of infloor duct

2.2.1.1.1 Freestanding

These are ducts and associated fittings which are not embedded in the floor (see Figure A1).

© EAC 2005 — All rights reserved

2.2.1.1.2 Flushduct infloor system (see Figure A.2)

A flushduct system is one where the upper surface of the ducts and the access unit covers are level with the top concrete surface. The upper surface can be supplied blank or with factory preset openings.

2.2.1.1.3 Trench duct

A trench duct shall have removable coverplates through its entire length so that wires and cables may be placed rather than pulled in. Access from the trench duct to the distribution duct is through the bottom or side of the trench duct. The cover plates shall have means for levelling to the intended finished floor surface and shall be fitted with a gasket to prevent entry of water.

2.2.1.2 Floor structure (infloor duct)

The floor structure affects the type of infloor duct system that can be accommodated in the floor. The total depth of concrete and method of pour will dictate the selection of the duct system as follows:

a) In a monolithic pour the duct system is typically installed in the mid-point of the slab.

b) In slab-on-grade construction special consideration shall be given to maintaining the level of the infloor duct system.

c) In a double-pour floor, the infloor duct system is installed on the structural slab. The second pour buries the duct system.

d) In a post-tensioned pour, preset inserts shall be used with the infloor duct system.

e) When prefabricated concrete members are utilized, the infloor duct system is buried in the concrete topping.

 © EAC 2005 — All rights reserved

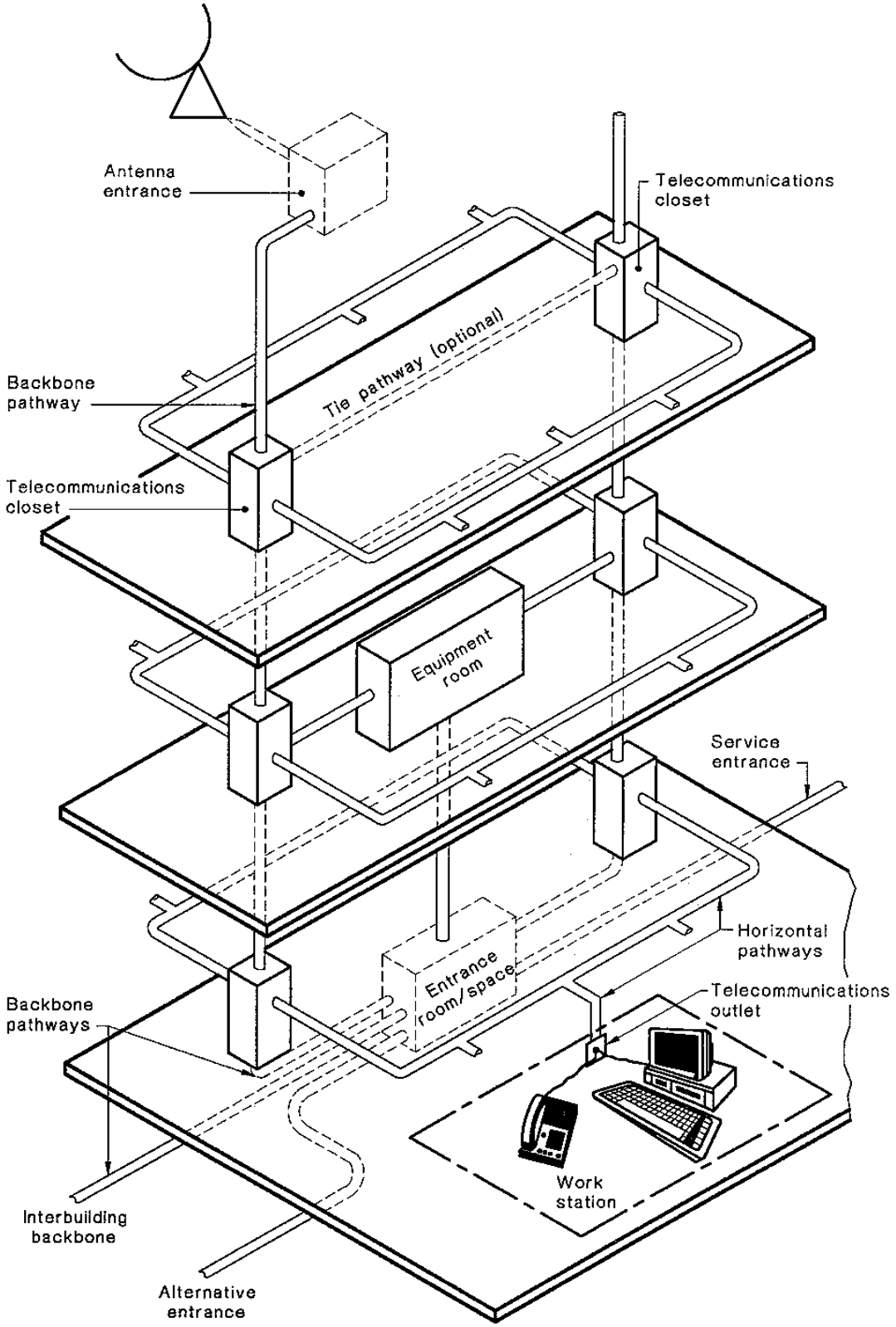

Figure 1 — Intra-building elements

© EAC 2005 — All rights reserved

2.2.1.3 Design guidelines and procedures (infloor duct)

2.2.1.3.1 General design information

The practice for general office space, based on the assumption of one workstation per 10 m^2, is to provide 200 mm^2 of cross-sectional infloor duct area per 10 m^2 of usable floor space. This practice applies to both feeder and distribution duct.

2.2.1.4 Distribution duct (infloor duct)

The distribution ducts are those ducts of an infloor duct system from which the wires and cables emerge to a specific workstation.

2.2.1.5 Feeder duct (infloor duct)

2.2.1.5.1 General

Feeder ducts in an infloor duct system are those ducts which connect the distribution ducts to the telecommunications closet. These include totally enclosed flush or buried duct and trench duct. Telecommunications feeder ducts shall terminate in the closet with a slot or bend as applicable (see Figure 2).

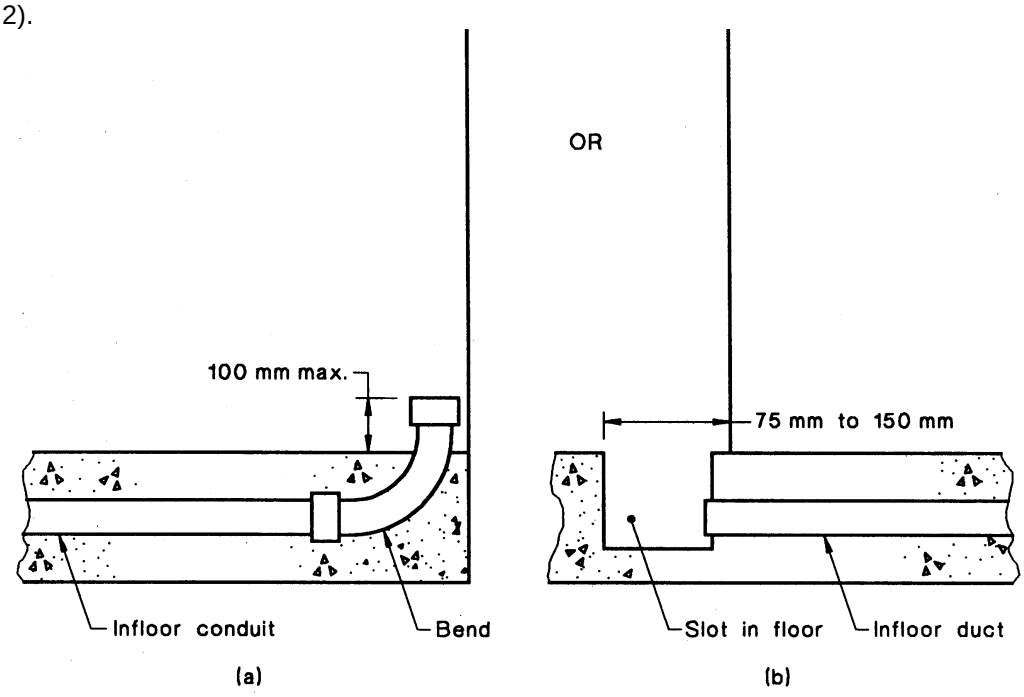

Figure 2 — Feeder duct closet termination

2.2.1.5.2 Supplementary feeder

Supplementary feeders shall be provided as follows:

a) Where the feeder ducts approach the telecommunications closet from different directions, a trench duct shall be installed. The trench duct shall extend into the closet. The use of a trench duct removes the need for horizontal bends in the feeder ducts at the telecommunications closet.

b) Feeder ducts may be installed on the underside of the floor slab connecting the distribution ducts to the telecommunications closet.

 © EAC 2005 — All rights reserved

2.2.1.6 Access- or hand-hole unit (infloor duct)

The access- or hand-hole unit provides access at the point of intersection of the feeder ducts and distribution ducts. In multi-duct layouts, the interior of the access unit shall be partitioned to allow complete separation of the systems. The cover plate shall be fitted with a gasket to prevent entry of water and shall have a means of levelling the plate to the surrounding floor area.

2.2.1.7 Layout (infloor duct) (see Figure 3)

2.2.1.7.1 Distribution

The layout of the distribution ducts shall be determined by the intended present and future use of the floor area. The individual duct sizes shall be determined (see **2.2.1.3.1**). The layout shall allow for the egress of systems cabling under the desks.

2.2.1.7.2 Feeder

In layouts where the distribution runs exceed 18 m, consideration shall be given to providing additional feeder ducts to interconnect the telecommunications distribution ducts and to reduce the pull distance. Having determined the quantity of distribution and feeder ducts required (see **2.2.1.3.1**) to serve the floor area concerned, the allocation of feeder to distribution ducts shall be determined as follows (see Figure 3):

a) Identify the number of feeder ducts required to serve that floor area.

b) Identify the number of distribution ducts to be served.

c) Divide both quantities by their highest common factor so that the resultants are either: 1 to 1.1 to 2.1 to 3, etc. or 2 to 3 and, as a last resort, 3 to 4.

d) If the resultants do not meet the above, deduct 1, 2 or 3 from the number of distribution ducts in Step (b), then repeat Step (c). In this case, the ducts deducted shall be treated as a separate unit served by additional feeder(s).

e) In some cases, it may be necessary to round off the feeder ducts in Step (a) to an even number.

f) If the number of feeder and distribution ducts are nearly equal, it is usually more economical to make them equal, than increase the number of access holes in the feeder ducts.

g) Where the number of feeders in Step (a) is greater than the distribution ducts in Step (b):

   i) Provide one or two feeders to serve each distribution duct.

   ii) Allocate the remainder required as in Steps (c), (d) and (e).

2.2.1.8 Installation (infloor duct)

2.2.1.8.1 Flush duct

Duct runs with preset inserts shall be levelled so that the top of the insert is 3 mm below the finished pour. Marker screws identifying the duct runs shall be placed at each duct end, on either side of permanent partitions, and in the first insert adjacent to access units.

2.2.1.8.2 Trench

Trench duct sections shall be coupled together and levelled so that the top surface will be flush with the concrete pour. Openings from the base of the trench to the appropriate distribution duct shall be cut, and grommets shall be installed. All openings and joints on the top cover plate shall be sealed with tape prior to the concrete pour. After the concrete pour, the trench top rail shall be levelled to the

© EAC 2005 — All rights reserved

concrete finish. Adjustable partitions shall be raised to the underside of the cover plate and tack-welded in place to add support to the cover and assure complete separation of the systems. Tackwelds shall be painted to prevent rusting. Floor finish trim shall be installed.

2.2.1.9 Inserts (infloor duct)

2.2.1.9.1 Preset

Preset inserts are factory-installed fittings providing an opening in the distribution ducts for future attachment of floor service fittings.

2.2.1.9.2 Afterset

Afterset inserts are field-installed fittings providing an opening in the distribution ducts after the concrete has been poured, for attachment of a floor service fitting.

2.2.1.9.3 Capping

Capping is the plugging of a preset or afterset insert when a floor service fitting is removed.

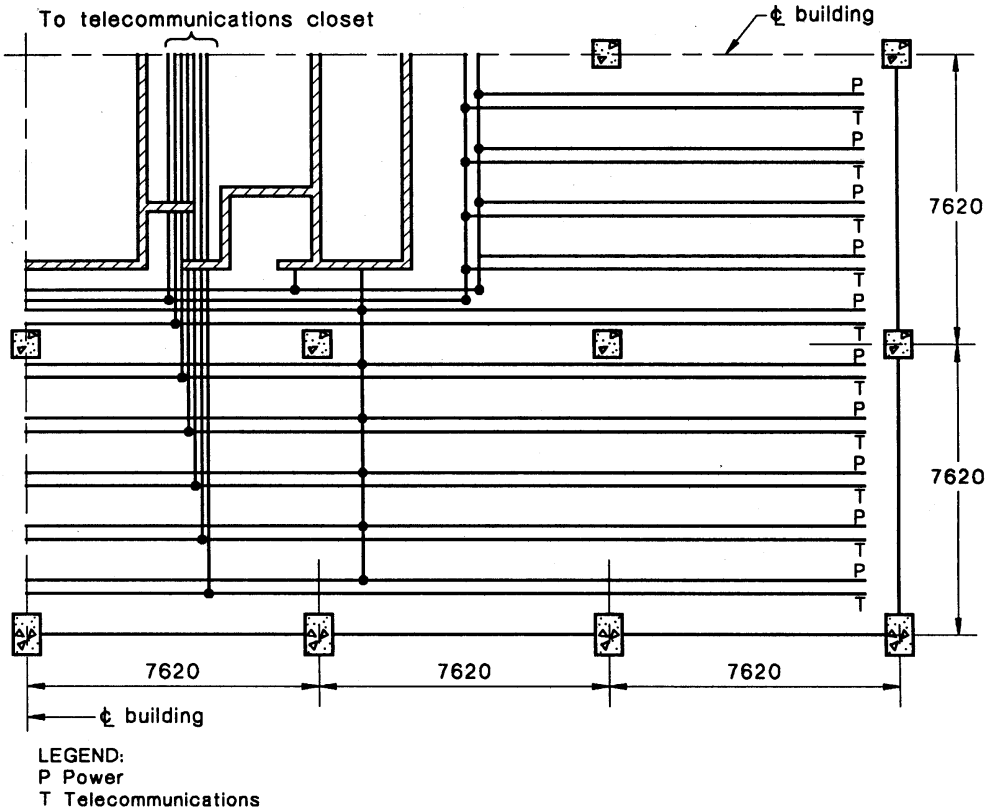

Dimensions in millimetres

Figure 3 — Infloor duct layout

2.2.1.10 Service fittings (infloor duct)

2.2.1.10.1 General

Service fittings are available in several different types that serve from one to many different services. If electrical power is one of the services in a combined fitting, the fitting shall be fully partitioned.

2.2.1.10.2 Dedicated infloor

Dedicated infloor service fittings are boxes installed in the concrete slab (prior to the pour) on a predetermined grid of the distribution layout, providing access to all services. When services are

 © EAC 2005 — All rights reserved

required, assemblies containing the connecting devices for each system are installed along with a floor finish egress plate.

2.3 Access floor

2.3.1 General

Access flooring comprises modular floor panels supported by pedestals with or without lateral bracing or stringers (see Figure 4). It is used in computer and equipment rooms as well as in general office areas. It is available in combustible, non-combustible, and composite panels. It can also be designed for seismic and other special conditions. Where access floor is used, consideration should be given to the impact of also using the space for air handling.

2.3.2 Firestop assemblies

The integrity of all firestop assemblies shall be maintained when penetrated by cable, wire, and pathways.

2.3.3 Access floor types

2.3.3.1 Stringered

Stringered systems have lateral bracing between the pedestal supports. Used in equipment, control, and computer rooms, stringered systems provide additional support to facilitate frequent removal and replacement of unrestrained panels. Stringers shall be bolted or snapped to the pedestal head and provide additional support to the panels and lateral stability to the system.

2.3.3.2 Freestanding

Freestanding types consist of panels that are supported solely by the pedestal supports with no mechanical fastening. These shall be restricted to low finished-floor heights (e.g. 300 mm or less).

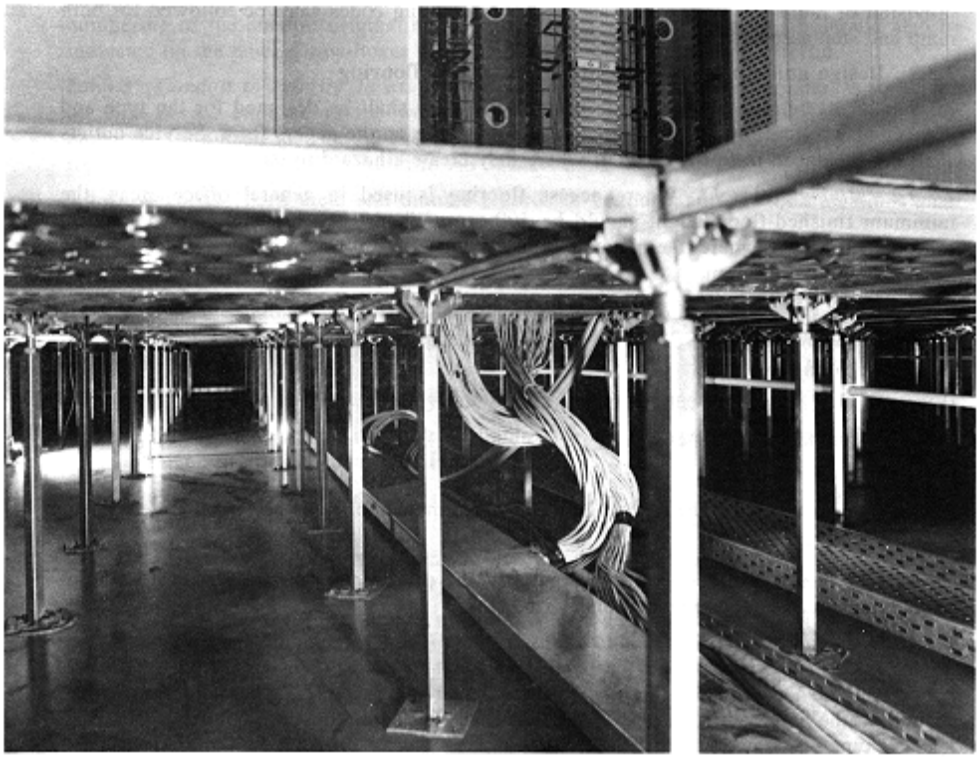

Figure 4 — Typical access floor

© EAC 2005 — All rights reserved

2.3.3.3 Cornerlock

Cornerlock types, as in freestanding types, have panels supported only by pedestals, and the panels shall be mechanically fastened to the pedestal heads at each corner. This method adds the stability necessary in a general office installation.

2.3.4 Loading performance

Performance information for static, dynamic and impact loading conditions is provided in Paragraph **A1**, Appendix A.

2.3.5 Test methods for access floor

Panels and understructure shall be tested to, and meet the requirements of ISO 9001, 9002, 9003, 9004.

2.3.6 Fire rating

The floor panels exclusive of covering shall comply with local regulations. Where wiring is not contained in conduit, panels shall be fabricated completely of non-combustible materials. Flame spread integrity shall not be affected when the panel is cut.

2.3.7 Seismic considerations

The access floor specification shall take into consideration the requirements of KS 996.

2.3.8 Building structure

2.3.8.1 Depressed slab

In the case of new constructions, the area to receive access flooring shall be depressed. The depth of the depression shall equal the height of the finished access floor.

2.3.8.2 Normal slab

Where the slab is not depressed, consideration shall be given to provision of ramps or steps to the access floor. Building codes shall be followed for both ramp and step assemblies.

2.3.9 Design guidelines and procedures for access flooring

2.3.9.1 Workstations

Penetrations through the floor shall be designed for the type and number of workstations, and may be located anywhere on the access floor. Service outlets shall not be placed in traffic areas or where they create a hazard to the occupants.

2.3.9.2 Minimum height

Where access flooring is used in general office areas, the minimum finished-floor height should be 100 mm. When used in a computer or control room environment where the plenum is used for HVAC, the minimum finished-floor height should be 300 mm.

2.3.9.3 Cable management

Consideration shall be given to using some method of cable space management for cabling such as-

a) dedicated routes;

b) pathway primary distribution;

 © EAC 2005 — All rights reserved

c) zone distribution systems; and

d) cable trays.

2.3.9.4 Access floors

These shall be designed to meet applicable electrical codes.

2.3.10 Installation

2.3.10.1 Layout

The access floor layout shall be determined prior to the installation of any equipment or telecommunications wiring.

2.3.10.2 Linkage to telecommunications closet

The telecommunications closet and access floor area served should be located adjacent to each other, connected by sleeves, conduit or open penetrations. If not adjacent, other means of linkage shall be provided. Sizing of the interconnecting pathways shall be based on the design criteria for each specific type of pathway.

2.3.10.3 Service fittings

Service fittings for access flooring consist of single or combined slab-mounted and single or combined dedicated fittings. The manufacturer's specification should be consulted to ensure compatibility.

2.3.10.4 Bonding of access flooring

All metal parts of access floors shall be bonded to earth in accordance with KS 662.

2.4 Conduit

2.4.1 Types of conduit (see **7.3.2.2.1**)

Conduit types include rigid metal and rigid PVC. Conduit shall be of the type permitted under the appropriate codes. Metal flex conduit is not recommended due to cable abrasion problems and is not covered by this Standard.

2.4.2 Use of conduit

The use of conduit as a horizontal pathway system for telecommunications cabling should only be considered when outlet locations are permanent, device densities are low, and flexibility is not required. In-floor conduit systems are especially inflexible as they are usually buried in concrete.

2.4.3 Design guidelines

Please refer to design information covering aspects such as conduit runs, bends, draw wires, support, end protection, fittings and sizes.

2.4.3.1 Conduit in hazardous locations

Where a telecommunications conduit is to be placed in a hazardous location, such as an explosive or combustible atmosphere, the applicable code shall be adhered to.

© EAC 2005 — All rights reserved

2.4.3.2 Conduit system identification

All conduit should be clearly labelled at both ends designating the floor closet by number (e.g. 6A-3), which includes the sequential numbering of the conduit originating at that closet (i.e. 3). Conduit length should also be indicated on the label. Draw-boxes should be labelled on the exposed exterior.

2.4.3.3 Conduit to exterior locations

Where a telecommunications conduit is to be run up to a device exposed to the weather, care shall be taken to prevent the ingress of moisture. Care shall also be taken to ensure that moisture will not collect in low points, freeze and damage the cable. Refer to KS 662.

2.4.4 Records

Permanent and durable records of conduit and draw-box locations shall be prepared to facilitate administration.

2.5 Cable trays and ducts

2.5.1 General

Cable trays and ducts are rigid structures for the containment of telecommunications cables. These pathways shall be installed in accordance with the applicable codes.

2.5.1.1 Types

There are essentially three types in general use:

a) Duct
A prefabricated structure available as a metal or plastic trough equipped with a hinged or clip-on cover (see Figure A.1).

b) Cable tray
A prefabricated structure with a one-piece perforated bottom, or solid bottom channel section not exceeding 150 mm in width (see Figure A.3).

c) Ladder cable tray
A prefabricated structure consisting of two side rails connected by individual transverse members (see Figure A.3).

2.5.1.2 Accessories

These include such items as covers, hold-down devices, knockouts, dropouts, conduit adaptors and dividers.

2.5.1.3 Divided trays and ducts

Trays and ducts may be divided with a barrier to allow the placement of both power and telecommunications cables as required by KS 662 (see Figure A.1).

2.5.2 Location

Trays and ducts may be located below or above the ceiling in either plenum or non-plenum applications.

2.5.3 General design information

The practice for general office space, based on the assumption of one workstation per 10 m^2, is to provide a 650 mm^2 cross-sectional area of tray or duct per 10 m^2 of usable floor space.

 © EAC 2005 — All rights reserved

Where it is known that the number of devices per workstation or the workstation floor-space allocation is different, the sizing shall be adjusted. This practice applies to both feeder and distribution trays as applicable. Care shall be exercised not to exceed the loading and depth requirements.

2.5.4 Loading

Loading of cable trays and ducts shall comply with the applicable codes.

2.5.5 Support

Cable trays may be supported by one or more of three basic support devices-cantilever brackets, trapeze, and individual rod suspension. Supports should be located where practicable so that connections between sections of the tray fall between the support point and the quarter section of the span. The support centres shall be in accordance with the load and span for the applicable class as specified in KS 662. A support should be placed within 600 mm on each side of any connection to a fitting. Ducts shall be supported on 1500 mm centres unless designed for greater lengths.

2.5.6 Accessories

Fittings used include bends, reducers, crossovers and tees. These fittings may be used to change direction or size of the tray or duct.

2.5.7 Installation

The requirements below shall apply.

2.5.7.1 Requirements

The inside of the cable tray or duct shall be free of burrs, sharp edges or projections that can damage cable insulation. When a duct passes through a partition or wall, it shall be an unbroken length of duct. Telecommunications cables shall not exceed the fill requirements stated in applicable codes and shall be properly firestopped. Barriers between power and telecommunications cables shall be installed as shown in KS 662. Metal cable trays and ducts shall be bonded to earth. Cable trays and ducts shall not be used as walkways or ladders, unless specifically designed and installed for that purpose.

2.5.7.2 Access

In general a minimum of 300 mm access headroom shall be provided and maintained above a cable tray. Care shall be taken to ensure that other building components (e.g. air-conditioning ducts) do not restrict clearance above trays or ducts to less than 75 mm.

2.6 Ceiling pathway

2.6.1 General

Ceiling areas are sometimes used as pathways for telecommunications cable. Rules covering installations in both air plenums and non-plenum hollow-ceiling systems are found in the applicable electrical and building codes. Consideration should be given to the use of plenum-rated cables only when placing cables in air plenums.

2.6.2 Considerations

Ceiling distribution systems shall meet the following conditions:

a) Inaccessible ceiling areas, such as those behind lock-in type ceiling tiles, drywall or plaster, shall not be used as distribution pathways, unless provision is made for the future (e.g. ducts/conduits with draw wires).

b) The ceiling tiles shall be of the removable or lay-in type.

© EAC 2005 — All rights reserved

c) Adequate and suitable space shall be made available in the ceiling area for the distribution layout recommended.

d) Ducting/troughing shall be provided where required by codes or design.

2.6.3 Design guidelines

2.6.3.1 Planning

The design shall provide a suitable means and method for supporting cables from the telecommunications closet to the workstation to be served. The suspended ceiling support wire or rod shall not be used for this purpose. Cable shall not be laid directly on the ceiling tile or rails.

2.6.3.2 Clearance

A cabling zone with a minimum of 75 mm clear vertical space shall be available within the ceiling cavity for distribution wiring and pathways.

2.6.3.3 Service columns (see Figure 5)

2.6.3.3.1 General

Service columns provide pathways for the cables from the ceiling to the workstation. Service columns used for both telecommunications and power distribution shall comply with applicable electrical codes.

2.6.3.3.2 Use of service columns

Service columns shall be attached to, and supported by, ceiling support channels. They shall not be attached to the transverse or short length channels unless they are also rigidly secured to the main support channel. When service columns are used, the main ceiling rails shall be rigidly installed and braced to overcome movement, both vertical and horizontal.

2.6.3.4 Zones

It is recommended that the floor area to be served be divided into telecommunications 'zones', consisting of approximately 35 to 82 m^2. Wiring to each zone may be placed without the use of ducting/troughing in the ceiling where permitted by applicable codes, or installed in a conduit (see iec 60364), extending from the telecommunications closet to the mid-point of the zone. From that point, cables should be extended to the top of the service columns or wall conduit, and down to the workstation locations. Loose cables from each zone to the telecommunications closet should be grouped and tied (see Figure 6). Under no circumstances should cables be supported solely by ceiling tiles.

2.6.3.5 Trays

When a tray is used in the ceiling area, conduit from the tray to outlets or zones should be provided.

2.6.4 Telecommunications closet termination

Trays and zone conduit within the ceiling shall protrude into the closet from 25 to 50 mm, without a bend, and above the 2.4 m level.

2.6.5 Wall and partition wiring

Where demountable partitions are used to conceal the cables, a snap-in panel or cover shall be provided. Alternatively, a hollow wall may be used to conceal the cable if an accessible space or conduit of sufficient size is provided.

 © EAC 2005 — All rights reserved

2.6.6 Cable support

Where zone conduit or a cable tray is not available in a suspended ceiling space and where telecommunications cables are allowed to be placed loosely in the ceiling, adequate open-top cable supports, located on 1200-1500 mm centres, shall be provided. Where larger quantities of cables (50-75 cables) are bunched together in the ceiling in a congested area, such as close to the telecommunications closet, special supports shall be designed and installed to carry the additional weight.

2.7 Perimeter pathways

2.7.1 General

Perimeter skirting ducts serve workstations where telecommunications devices can be reached from walls at convenient levels (see Figure A4).

2.7.2 Types

2.7.2.1 Surface ducting/troughing

Skirting ducting/troughing consisting of base, cover, couplings, bends, and similar fittings, mounted directly on wall surfaces at appropriate work levels to provide a continuous perimeter pathway. Telecommunications outlets should be located in cover fittings along the ducting and may be moved or added to after initial installation.

2.7.2.2 Recessed channelling

Recessed channelling is integrated into wall or workstation structures to provide a continuous perimeter pathway with egress fittings at the wall surface. A typical application of recessed channelling is at skirting board level where telecommunications outlets may be located.

2.7.2.3 Moulded channelling/ducting

Moulded channelling/ducting is generally surface mounted and has the appearance of typical building components such as skirting, or workstation and trim mouldings.

2.7.2.4 Multi-channel skirting duct

Multi-channel skirting ducts provide perimeter pathways for different systems in combination, such as telecommunications, power and lighting circuits. The same relative location of each channel is maintained for each system throughout the building. In multi-channel metal ducting/troughing, dividers separating compartments shall be bonded to earth.

© EAC 2005 — All rights reserved

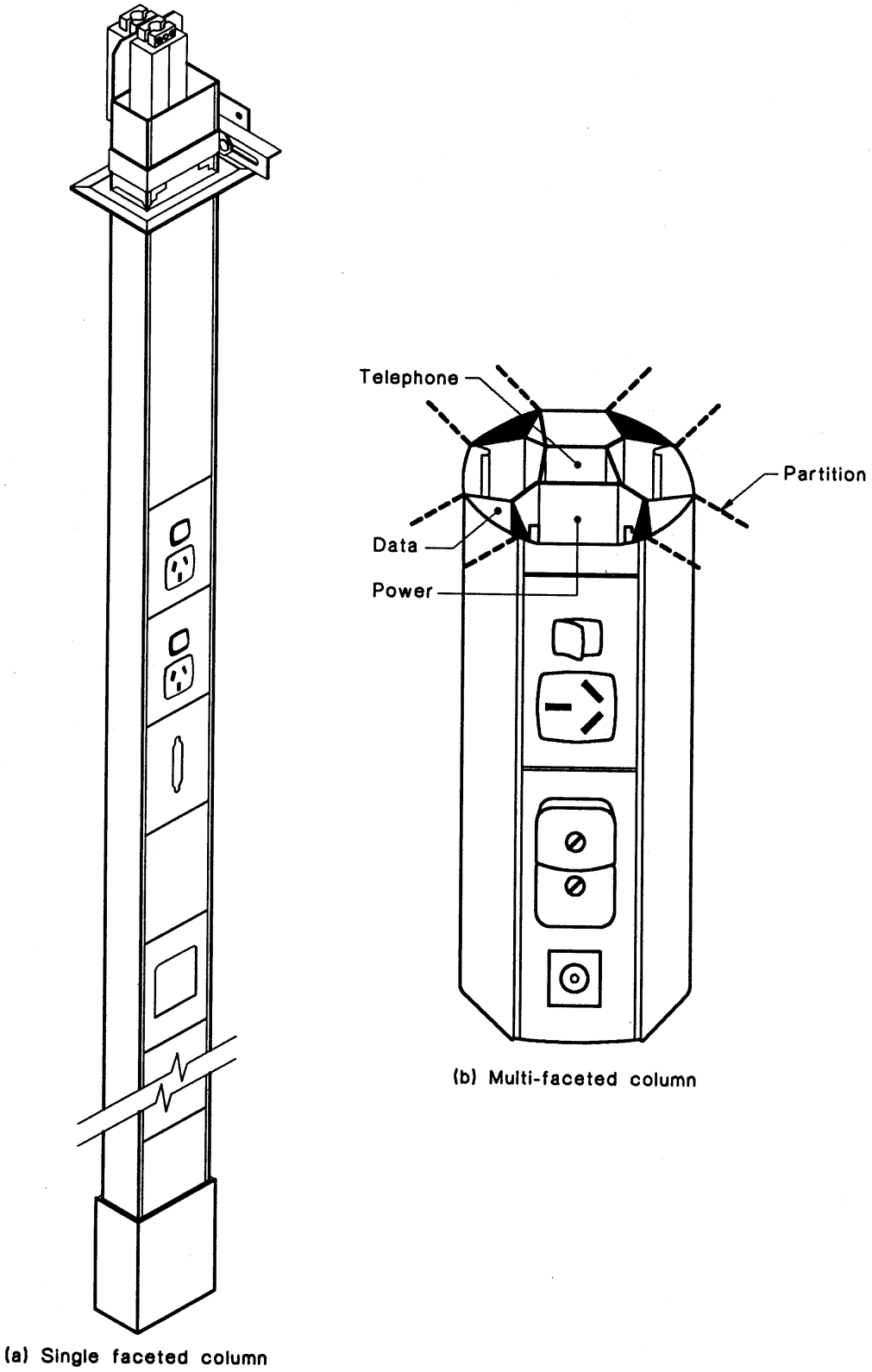

Figure 5 — Typical service columns

© EAC 2005 — All rights reserved

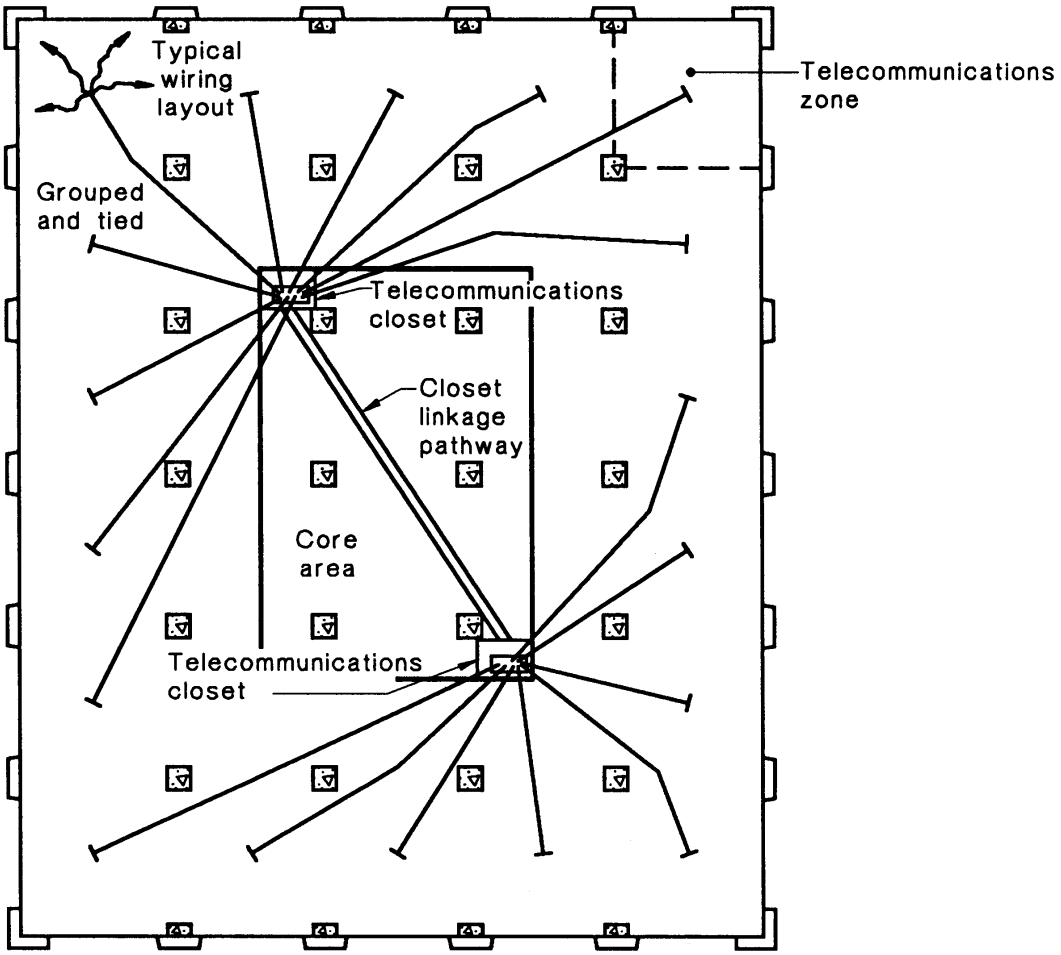

NOTE 1 The recommended practice is to lay cable in grid pattern.

NOTE 2 Excess cable should be kept to a minimum and should not be coiled.

Figure 6 — Typical ceiling distribution system

2.7.3 Design guidelines and procedures

2.7.3.1 Room size

The determining factor for all perimeter pathway usage is room size because the devices in the room depend on services from fixed wall areas. In larger rooms with partitions or modular furniture, perimeter pathways may be extended to the workstation to provide continuous pathways to telecommunications outlets.

2.7.3.2 Pathway sizing

The practical capacity for telecommunications wiring in perimeter ducting/troughing ranges from 30% to 50% fill, depending on cable-bending radius. The pathway size shall be calculated by taking the summation of the cross-sectional area of all cables divided by the percentage (expressed as a decimal fraction) of fill.

2.7.3.3 Physical limitations

Surface metal and surface non-metal ducting/troughing shall be limited to use in dry locations. For other requirements, see appropriate building and electrical codes.

© EAC 2005 — All rights reserved

2.8 Miscellaneous

2.8.1 **Undercarpet** (refer to EAS 372-1)

2.8.1.1 General

Undercarpet wiring systems are not recommended.

2.8.2 Transition points

Transition boxes may be required for special cases. They shall be located in permanent locations such as building columns, permanent walls, ceilings and flush floor boxes. Transition boxes should not be located in walls that are subject to relocation.

2.8.2.1 Design guidelines (see Figure 7)

The following guidelines should be followed:

a) When used, conduit from the telecommunications closet serving the transition box should be sized as per the guide in IEC 60364.

b) The transition box and cover should be sized to meet specific requirements.

c) Transition boxes shall be located so as to minimize the crossover of electrical and telecommunications undercarpet cable.

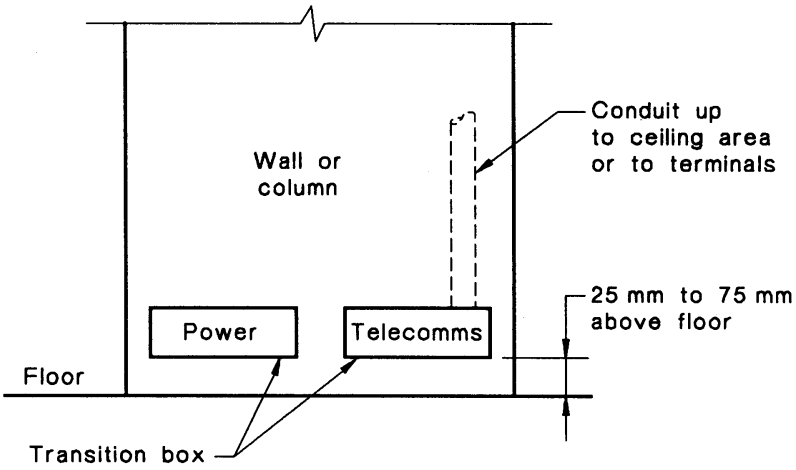

Figure 7 — Typical transition boxes in columns

2.8.3 Interstud

'Interstud' pathways are those pathways within a wall. The studs are made of wood or metal. When metal studs are used, the pathway is formed by the hollow spaces between studs or the pre-punched holes within the stud. When wooden studs are used, the pathway is the hollow space between the studs or drilled through the studs. The pathway shall not have any sharp edges and shall be provided with bushings where required so that the edges will not cut through the wire.

2.8.4 Overfloor cabling

Overfloor cabling is not covered by this Standard.

2.8.5 **Exposed wiring**.

Telecommunications wiring intended to be exposed to view is not covered by this Standard.

 © EAC 2005 — All rights reserved

2.8.6 Curtain wall

Pathways shall not be routed through gaps between the floor or ceiling structure and the curtain wall.

3 Backbone pathways

3.1 General

3.1.1 Types

Backbone pathways consist of intra- and inter-building pathways. The term 'backbone' replaces 'riser', 'block' and 'building-tie' in cable terminology. Backbone pathways may be either vertical or horizontal. Inter-building backbone pathways extend between buildings. Intra-building backbone pathways are contained within a building.

3.1.2 Bonding and earthing

Bonding and earthing of backbone pathways shall comply with applicable electrical codes.

3.2 Intra-building pathways

3.2.1 General

3.2.1.1 Intra-building pathways

These consist of conduit, sleeves, slots or penetrations and trays, and provide the means for placing backbone cables from-

a) the entrance room (or space) to telecommunications closets; and

b) equipment rooms to either the entrance room (or space) or telecommunications closets.

Where firestopping is required by the BCA, penetrations of walls, floors and ceilings shall be treated in accordance with that Code.

3.2.1.2 Vertical backbone pathways

These consist of telecommunications closets located on each floor, which are vertically stacked one above the other, and tied together by sleeves or penetrations. When a closet cannot be vertically stacked with the one above or below and the entrance room, a pathway shall be provided to link them as shown in Figure 8.

NOTE With closets aligned in a vertical pathway, some means for cable pulling should be provided above and in line with the sleeves or penetrations at the uppermost closet of each vertical stack. A steel anchor pulling iron or eye embedded in the concrete is an example. Similar techniques may be required for long horizontal pathways.

3.2.1.3 Lift shafts

Pathways shall not be located in lift shafts.

3.2.2 Design

3.2.2.1 Capacity

The quantity of backbone pathways using 100 mm conduit, slots or sleeves shall consist of one of these per floor up to 5000 m^2 of usable floor space served by that backbone system.

3.2.2.2 Spare capacity

Where a large number of cables are expected, provision shall be made for additional sleeves, conduit, trays, or penetrations (notwithstanding any additional penetrations for a tenant's inter-floor cabling).

© EAC 2005 — All rights reserved

If slots are used, these shall be sized to allow for future additional cabling.

NOTE A penetration suitably firestopped may be used with equivalent area to 100 mm diameter conduits.

3.2.2.3 Firestopping

All pathways shall be properly firestopped. See Figure 9 for typical sleeve and penetration installations. Penetrations through fire rated partitions must meet the requirements of the BCA.

3.2.2.4 Conduit fill

Conduit pathways shall be designed based on the fill specifications identified in KS 662. Allowance shall be made for future, additional cables.

3.2.2.5 Tray and duct fill

Cable tray and duct pathways shall be designed based on the fill specification identified in **2.5**.

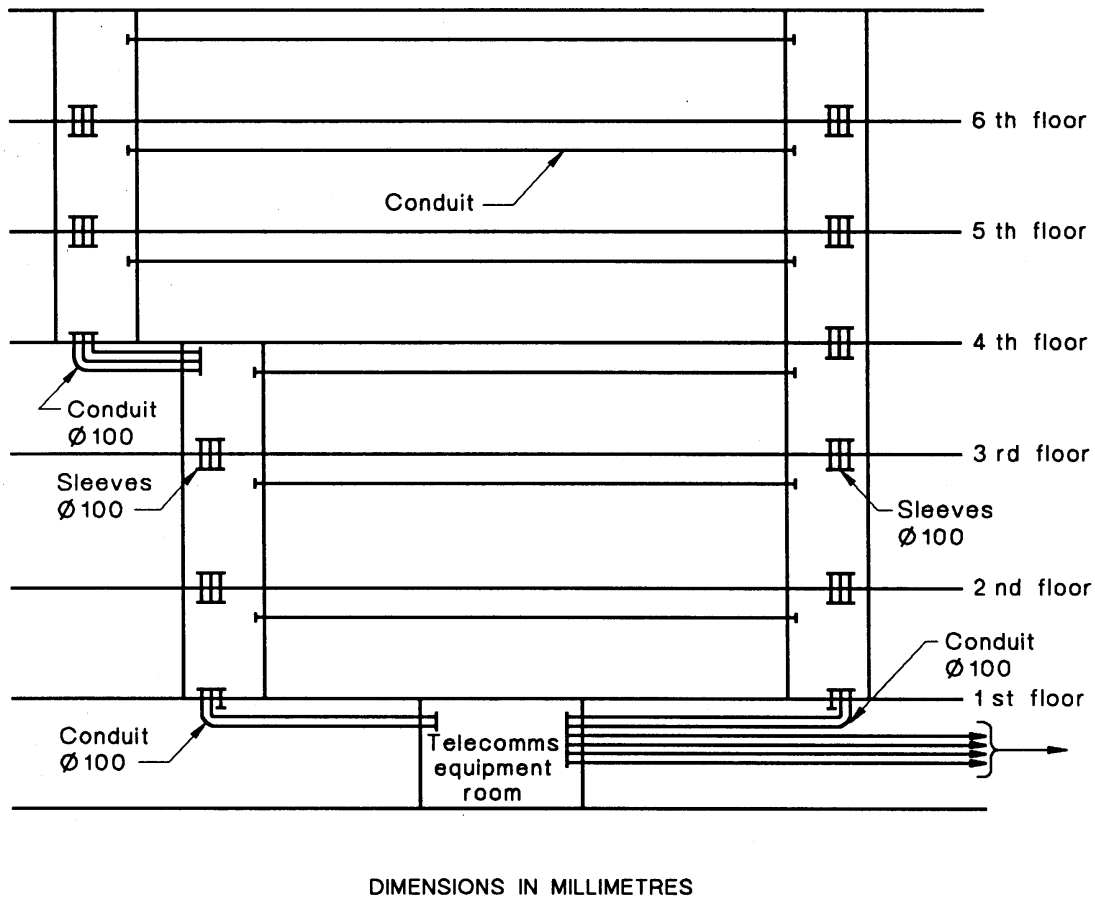

Figure 8 — Typical office building layout

3.3 Inter-building pathways

3.3.1 General

3.3.1.1 Types

Inter-building pathways interconnect separate buildings such as those on a campus. These pathways consist of underground, buried, aerial, and tunnel pathways (see Figure 10).

 © EAC 2005 — All rights reserved

3.3.1.2 Planning

During the initial planning stage, all buildings identified on the site plan shall have a fundamental telecommunications design plan developed, regardless of whether a service is requested. The telecommunications design plan should include pathways design between buildings.

3.3.2 Types

Underground, buried, and aerial pathway designs are specified in Clause **7**. However, because tunnels are mainly inter-building pathways in campus environments they are specified below.

3.3.3 Tunnels

3.3.3.1 General

Telecommunications pathways may be installed in tunnels alone or jointly with other facilities. The pathways may consist of conduit, tray, duct or support stand (see Figure 11).

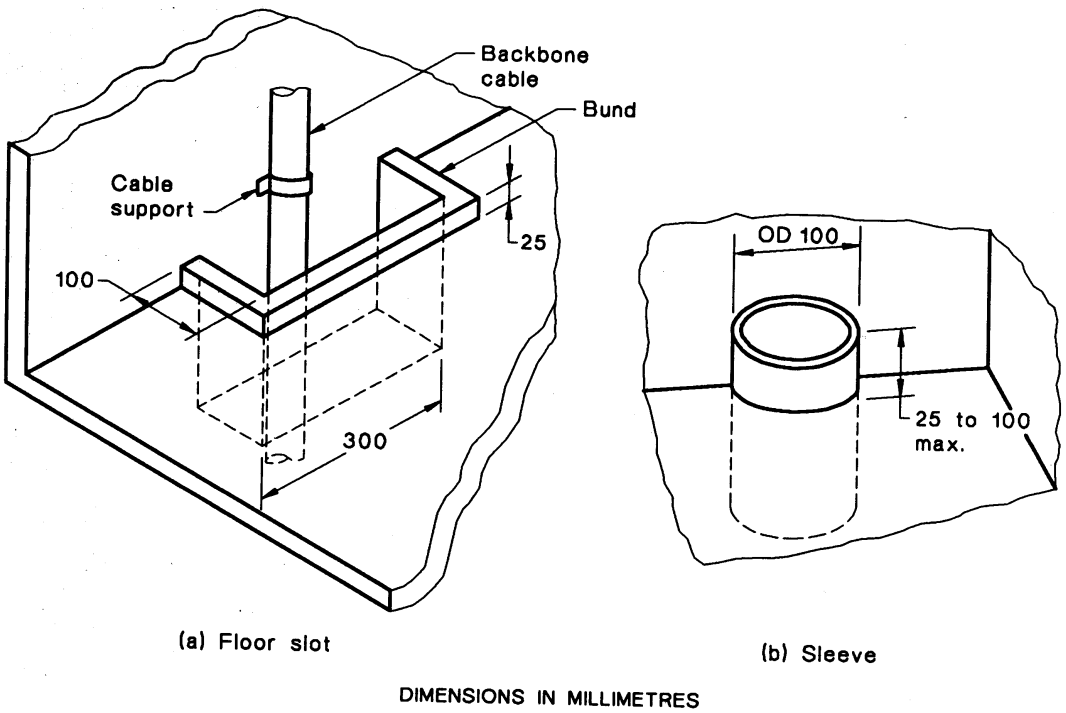

Figure 9 — Typical sleeve and slot installations

3.3.3.2 Planning

Location of telecommunications pathways within a tunnel shall be planned to ensure accessibility and separation from other services. The design of the pathway shall allow for randomly spaced splicing enclosures.

3.3.3.3 Design

The following items shall be provided in the design of the telecommunications pathway:

a) Corrosion-resistant pathway and associated hardware shall be used.

b) Metal pathways shall be bonded to ground as per applicable code.

c) Separation from electrical facilities shall be as per applicable code.

© EAC 2005 — All rights reserved

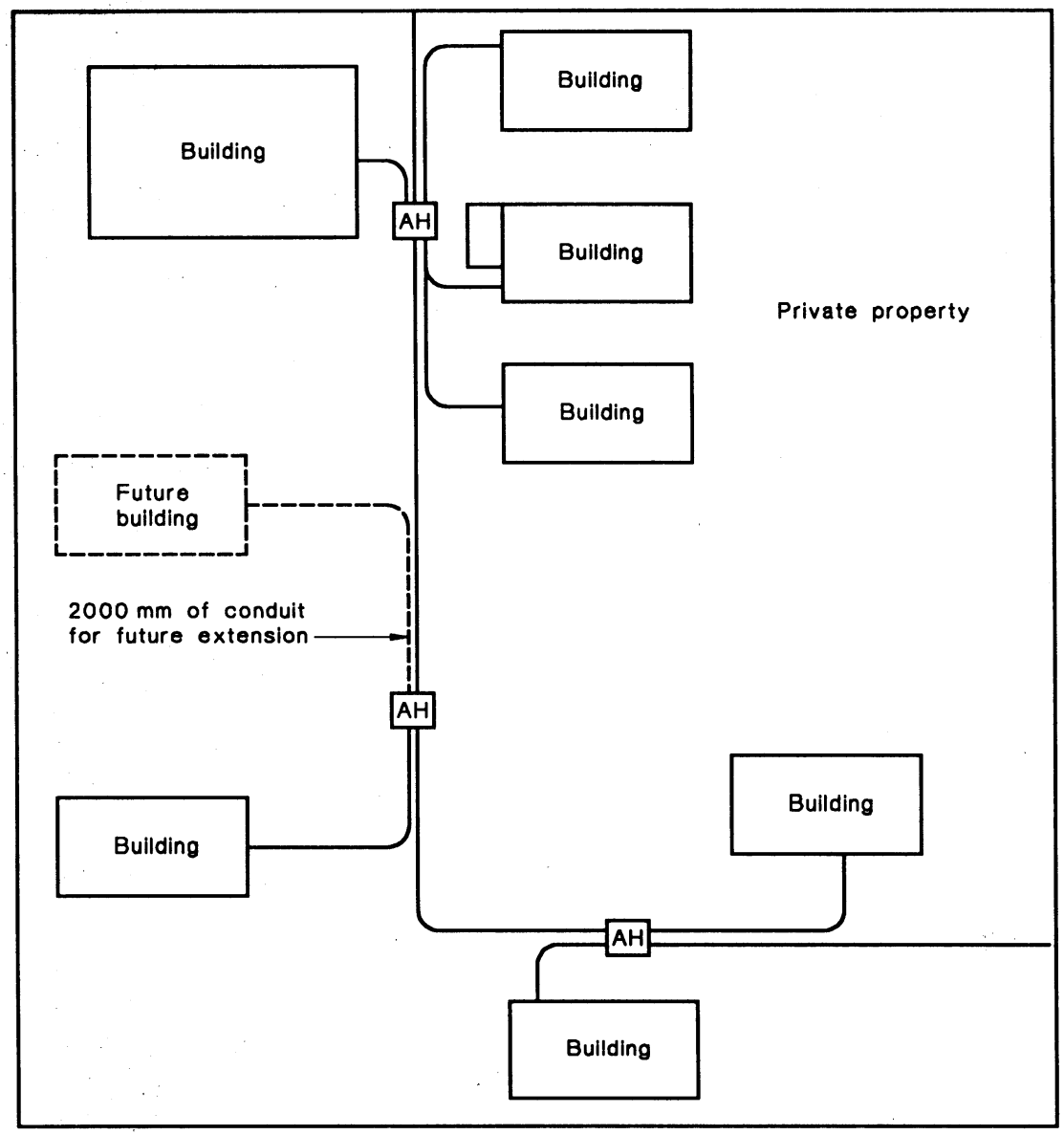

NOTES

1. For two ducts use a jointing pit.
2. For radius of bends see 7.3.2.2.3.
3. Depth as required by local codes.
4. AH means access hole.

Figure 10 — Typical inter-building underground layout

© EAC 2005 — All rights reserved

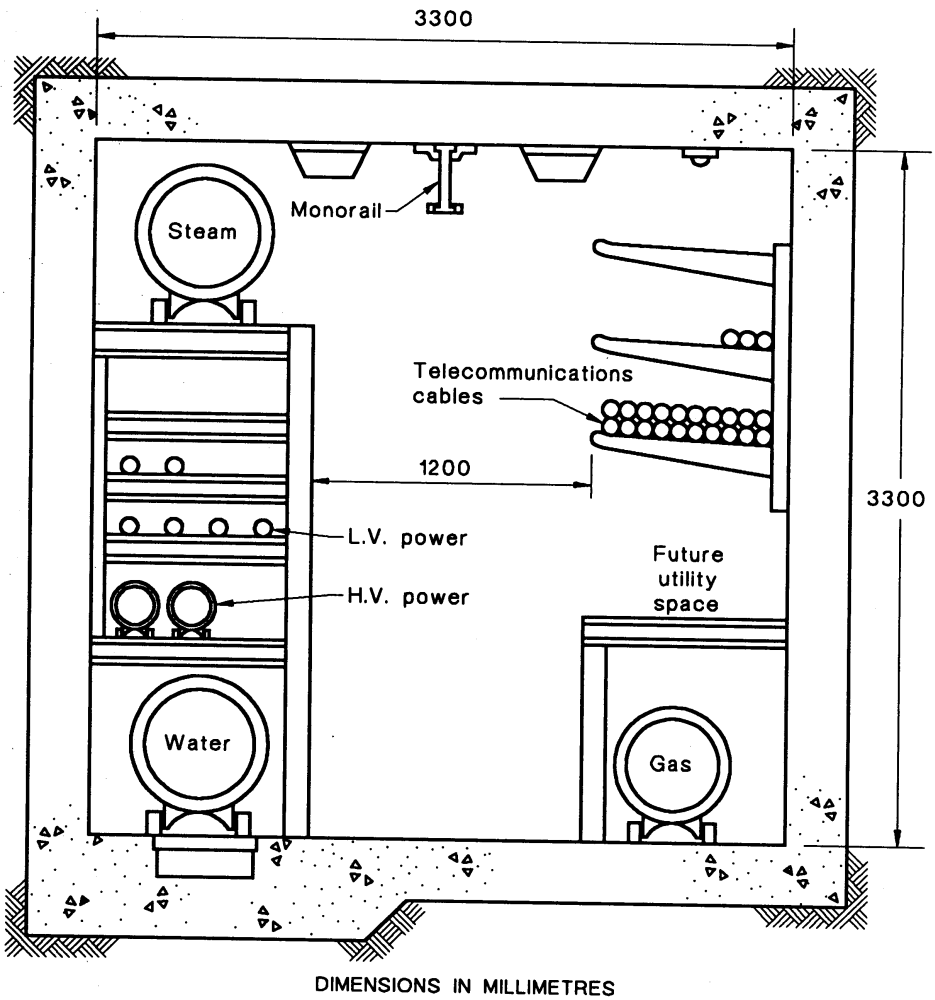

Figure 11 — Typical tunnel section

4 Workstation

4.1 General

Workstations are where users interact with telecommunications terminal equipment. It is important that the work area be properly designed for both occupants and devices. This Standard covers only those aspects of the workstation relating to the telecommunications pathway and outlet.

4.2 Specific workstation pathways

4.2.1 Furniture pathways

When using pathways incorporated into furniture or partitions, the pathways shall comply with applicable codes. Telecommunications cables typically are routed in the base or top of the duct/trough. Consult the furniture manufacturer for duct/trough cable capacities and optional duct/trough features.

4.2.2 Control centre, attendant and reception areas

Control centre, attendant and reception areas which have heavy demands for telecommunications equipment shall be provided with independent and direct pathways to the serving telecommunications closet or equipment room. Where built-in, flush-mounted, or recessed installations are planned, they shall be designed with access to the pathway.

© EAC 2005 — All rights reserved

4.3 Telecommunications outlets

4.3.1 General

A telecommunications outlet is the location of the connection point between the horizontal cable and cables connecting devices in the work area. A typical example would be in a 100 mm × 50 mm electrical wall-box having the horizontal cables terminated via connectors on a faceplate, into which telecommunications devices in the work area are connected. Connected devices are typically items such as telephones, personal computers, and graphic or video terminals, each of which may require access to the horizontal distribution facility via the telecommunications outlet. A fibre termination may require a wall-box of larger dimensions.

4.3.2 **Outlet density** (see EAS 372-1)

A minimum of two separate outlets shall be installed per workstation. For planning purposes, space allocated per workstation averages 10 m^2.

For building areas where it is difficult to add telecommunications outlets at a later date (e.g. private office space), a minimum of two separate spare outlets shall be provided in the initial design for that area. They shall be located to offer maximum flexibility for change within the work area, e.g. on the wall opposite that on which the prime outlets are located.

4.3.3 Outlet location considerations

Telecommunications outlet locations should be co-ordinated with the furniture layout. A power outlet should be installed near each telecommunications outlet. Wall-mounted outlets are typically installed at the same height as the power outlet.

5 Telecommunications closet

5.1 General

5.1.1 Function

The telecommunications closet on each floor is a transition point between the backbone and horizontal distribution pathways. The telecommunications closet shall be able to contain telecommunications equipment, cable terminations, and associated cross-connection wiring.

5.1.2 Location

The telecommunications closet shall be located as close as practicable to the centre of the area served and preferably in the core area.

5.1.3 Limited closets

Where telecommunications equipment is not to be included in the telecommunications closet, the closet dimensions shown in Table 1 may be reduced proportionately.

5.2 Design considerations

5.2.1 General

5.2.1.1 Dedicated facilities

Telecommunications closet space should be dedicated to the telecommunications function and related support facilities. This Standard assumes the shared use of the telecommunications closet space for the telecommunications needs of all occupants of the area served.

 © EAC 2005 — All rights reserved

5.2.1.2 Shared use

Telecommunications closet space shall not be shared with electrical installations (other than those for telecommunications) or with any other unrelated building service (e.g. plumbing).

5.2.2 Size and spacing (see Figure 12)

5.2.2.1 Density

There shall be a minimum of one telecommunications closet for up to 1500 m^2 of habitable floor space. Additional closets (one for each area up to 1500 m^2) shall be provided when the floor area to be served exceeds 1500 m^2 and shall be provided when the horizontal cable distribution distance to the workstation exceeds 90 m.

5.2.2.2 Closet linkage

Multiple closets on a floor shall be interconnected by a pathway capable of accommodating growth in cable density.

5.2.2.3 Size

Where, telecommunications equipment is to be included in the telecommunications closet, it is desirable to provide closet dimensions per Table 1 based on one workstation per 10 m^2.

5.2.2.4 Layout

See Figure 13 for typical telecommunications closet layout.

Table 1 — Closet dimensions

Serving area m^2	Recommended closet dimensions mm	Minimum internal are m^2
1000 - 1500	3000 × 3400	10
800 - 999	3000 × 2800	8
500 - 799	3000 × 2200	6

5.2.3 Floor loading

Telecommunications closets shall be located on floor areas designed with a minimum floor loading of 3 kPa. Concentrations of equipment which exceed the minimum floor loading shall be verified with the building owner.

© EAC 2005 — All rights reserved

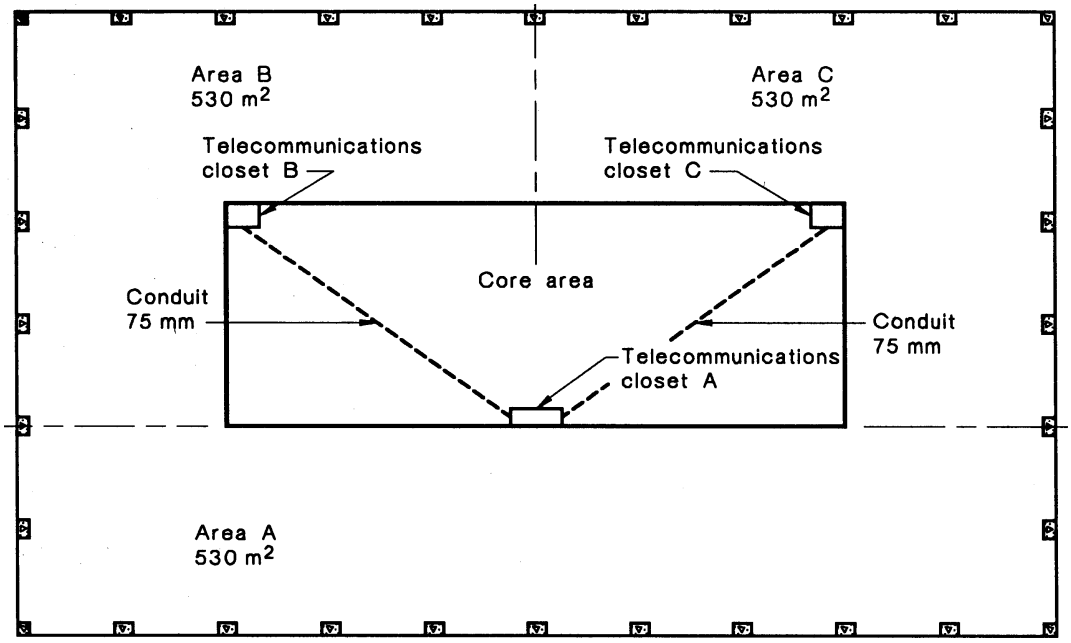

Figure 12 — Typical floor layout

5.2.4 Provisioning

5.2.4.1 Lighting

Lighting shall ensure an average illuminance of 600 lux on a horizontal plane 850 mm above the finished floor surface

5.2.4.2 Door

The door shall be a minimum of 900 mm wide and 2000 mm high, without doorsill, preferably hinged to open outward and fitted with a lock.

5.2.4.3 Finish

Floors, walls, and ceiling shall be treated to eliminate dust. Finishes shall be light in colour to enhance room lighting.

5.2.4.4 Power outlets

A minimum of two dedicated 10 A, 240 V a.c. double electrical outlets, each on separate circuits, shall be provided for equipment power. In addition, ‘convenience' double outlets shall be placed at 1.8 m intervals around the perimeter walls, at a height of 150 mm above the floor. If emergency power is available, consideration shall be given to automatic switchover of power. Specific outlets for equipment and convenience, along with their locations, shall be co-ordinated with the telecommunications system designers.

NOTE In many cases, it is desirable that a dedicated power panel be installed to serve the closet.

5.2.4.5 Building earth

Access shall be available to the main building earthing electrode.

 © EAC 2005 — All rights reserved

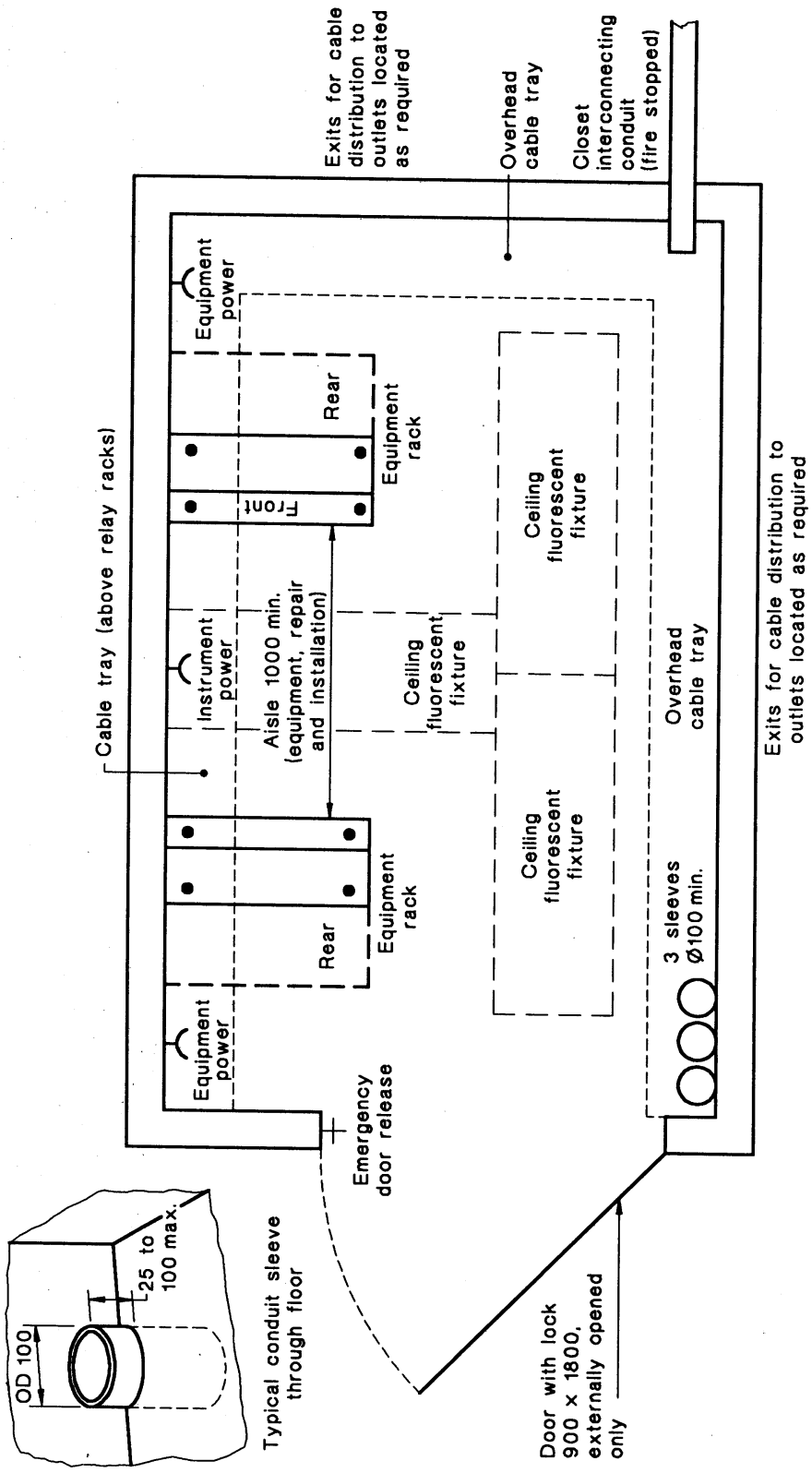

Figure 13 — Typical telecommunications closet

© EAC 2005 — All rights reserved

5.2.5 Closet penetrations

5.2.5.1 Sleeves/slots

Sleeves or slots through the closet floor should be adjacent to the door. Sleeves or slots shall not be left open except during cable installation and shall be properly firestopped as per the applicable codes.

The number and size of sleeves, slots or conduit shall be as determined in **3.2.2** (see Figure 9).

5.2.5.2 Other penetrations

Horizontal pathways are also closet penetrations and are covered in clause **2**.

5.2.6 Security and fire protection

5.2.6.1 Location

The telecommunications closet should preferably be located in an accessible area on each floor, e.g. a common hallway. Access to shared-use space shall be controlled by the building owner or agent.

5.2.6.2 Fire protection

Fire protection for the telecommunications closet, if required, shall be provided as per applicable code.

5.2.6.3 Sprinkler heads

Sprinkler heads, if required, shall be provided with wire cages to prevent accidental operation.

5.2.7 Environmental considerations

A positive pressure shall be maintained with a minimum of one air change per hour, or as required by applicable code. When active devices (heat-producing equipment) are present, a sufficient number of air changes per hour shall be provided to dissipate the heat. Planning for eventual provisioning, as required, of continuous HVAC (24 hours per day and 365 days per year) shall be included in the initial design.

6 Equipment room

6.1 General

6.1.1 Purpose

An equipment room is a centralized space for telecommunications equipment (e.g. customer switching system, computing equipment, video switch) which serves occupants of the building.

6.1.2 Requirements

This Section describes those parameters required to render the equipment space, or area, usable for initial and future equipment installations.

6.1.3 Dedicated space

The room should house only equipment directly related to the telecommunications system and its environmental support systems.

 © EAC 2005 — All rights reserved

6.2 Design Considerations

6.2.1 Site selection

Several factors need consideration in selecting the site for an equipment room.

6.2.1.1 General

When selecting equipment room sites, avoid locations that limit expansion. Accessibility for the delivery of large equipment to the equipment room should be provided (see **A.3**).

6.2.1.2 Floor loading

Floor loading capacity in the equipment room shall be sufficient to bear both the distributed and concentrated loads of the installed equipment. The distributed load-bearing capacity shall be greater than 7 kPa and the concentrated loading capacity shall be greater than 4.5 kN over the area of greatest stress, which is to be specified.

6.2.1.3 Water infiltration

The equipment room shall not be located below water level unless preventive measures against water infiltration are employed. The room shall be free of water pipes or drain pipes not directly required in support of the equipment within the room. A floor drain shall be provided within the room if risk of water ingress exists.

6.2.1.4 Bunding

As a matter of course, all floor penetrations should be bunded using a formed concrete upstand. This prevents flooding of lower floors if one floor floods for any reason (e.g. sprinkler system operation). Fire pillows, which are normally used for firestopping, will not prevent water infiltration.

6.2.1.5 HVAC

The equipment room shall be located with ready access to the main HVAC delivery system or alternative system.

6.2.1.6 Electromagnetic interference

The room shall be located away from sources of electromagnetic interference at a distance which will reduce interference. Special attention shall be given to electrical power supply transformers, motors and generators, X-ray equipment, radio or radar-transmitters, and induction sealing devices. All cabling should maintain at least 300 mm separation from fluorescent or neon lighting fixtures, and 1 m separation from transformers, motors or sources of electromagnetic field. It is desirable to locate the equipment room close to the main backbone pathway.

6.2.2 Size

6.2.2.1 General

The equipment room shall be sized to meet the known requirements of specific equipment. This information can be obtained from the equipment provider(s) and sizing shall include projected future requirements, as well as present requirements.

6.2.2.2 Guidelines

Where the specific equipment is not known, the following guidelines should be used.

© EAC 2005 — All rights reserved

6.2.2.2.1 Guidelines for voice and data

When designing the equipment room floor space, allowance should be made for non-uniform occupancy throughout the building. It is desirable to provide 0.07 m^2 of equipment room area for every 10 m^2 workstation space.

6.2.2.2.2 Specific considerations for multi-tenant buildings

A decision should be made as to whether the equipment will be located in an equipment room that is common to all tenants' equipment or in each tenant's own space. It is desirable to increase the size of the equipment room to accommodate a multiplicity of equipment. It is strongly recommended that equipment which will be used by an individual tenant solely for internal communications between floors be separately housed in an equipment room within the tenantable area. Connections between equipment rooms of the same tenant may be effected via existing pathways or core holes (which will have to be drilled) in existing buildings or via specially provided pathways in new buildings.

6.2.2.2.3 Specific guidelines for special-use buildings

In special-use buildings (e.g. hotel, hospital, laboratory), equipment room floor space allocations shall be based on the known number of workstations (not on usable floor area) as shown in Table 2.

Table 2 — Equipment room floor space in special use buildings

Workstations	Area, m^2
Up to 100	10
101 to 400	37
401 to 800	74
801 to 1200	111

6.2.2.2.4 Guidelines for other equipment

The installation of environmental control equipment, such as power distribution or air-conditioning systems, and uninterruptible power supplies (UPS) up to 100 kVA shall be permitted in the equipment room. UPS larger than 100 kVA should be located in a separate room.

6.2.3 Provisioning

6.2.3.1 Layout

Layout should be planned in consultation with equipment providers, taking into consideration weight and distance limitations between cabinets. Doors providing access to other areas of the building through the equipment room should be avoided in order to limit access to the equipment room to authorized personnel only. For a minimum size equipment room (7 m^2) the door shall open outwards to facilitate egress in an emergency.

6.2.3.2 Clearance height

Minimum clear height (i.e. without obstructions) in the room shall be 2400 mm or as per local government regulations.

6.2.3.3 Contaminants

The equipment room should be protected from contaminants and pollutants that could affect operation and material integrity of the installed equipment.

6.2.3.4 Backbone pathway

The equipment room shall be connected to the backbone pathway.

 © EAC 2005 — All rights reserved

6.2.3.5 Sprinklers (refer IEC 60215)

If sprinklers are required within the equipment area, the heads shall be provided with wire cages to prevent accidental operation.

6.2.3.6 Heating ventilation and air-conditioning (HVAC) equipment

6.2.3.6.1 Continuity of HVAC

HVAC should be provided on a 24 hours per day, 365 days per year basis. If the building system cannot assure continuous operation, or cater for large equipment applications, a standalone unit should be provided for the equipment room.

6.2.3.6.2 Temperature and humidity limits

The temperature and humidity should be controlled to provide continuous operating ranges of 18 °C to 24 °C with 30% to 55% relative humidity. Humidification and dehumidification equipment may be required depending upon local environmental conditions.

6.2.3.6.3 Position for measurement

The ambient temperature and humidity shall be measured at a distance of 1.5 m above the floor level, at any point along an equipment aisle centre-line, after the equipment has been in operation for at least 8 h.

6.2.3.6.4 Pressurization

A positive pressure differential with respect to surrounding areas should be provided.

6.2.3.6.5 Ventilation for batteries

If batteries are used for backup, adequate ventilation shall be provided.

6.2.3.7 Interior finishes

The floor, walls, and ceiling shall be sealed to reduce dust. Finishes shall be light in colour to enhance room lighting. Flooring materials having antistatic properties shall be selected.

6.2.3.8 Lighting

Lighting shall ensure an average illuminance of 600 lux, on a horizontal plane 850 mm above the finished floor, in the middle of all aisles between cabinets. The lighting shall be controlled by one or more switches located near the entrance door(s) to the room.

NOTE Lighting fixtures should not be powered from the same electrical distribution panel as the telecommunications equipment in the room. Dimmer switches and electronic ballasts should not be used in the equipment room. Emergency lighting and signs should be properly placed in the equipment room where absence of light would hamper emergency egress.

6.2.3.9 Power

6.2.3.9.1 Dedicated circuit

A separate supply circuit serving the equipment room shall be provided. Electric power provisioning for the equipment room is not specified in this Standard because it is dependent upon the equipment load and support facilities.

NOTE The separate supply circuit serving the equipment room should be terminated at its own sub-distribution board.

© EAC 2005 — All rights reserved

6.2.3.9.2 Emergency supply

If an emergency power source is available in the building, the equipment room panel should be linked to the emergency supply. Only equipment of a critical nature should be connected to this supply within the equipment room.

6.2.3.10 Door

The door shall be a minimum of 900 mm wide and 2000 mm high, without doorsill, and shall be fitted with a lock. Egress from the room shall not require a key. If it is anticipated that large equipment will be delivered to the equipment room, a double door (1800 mm wide × 2000 mm high), without doorsill and centre post, is recommended.

6.2.3.11 Equipment earthing

Provision shall be made for a dedicated safety earth in accordance KS 662.

6.2.3.12 Auxiliary fire extinguishers

Appropriate portable fire extinguishers shall be provided, and maintained, within the equipment room. They shall be located as close as practicable to the entry/exit.

7 Entrance facilities

7.1 General

The entrance facility consists of the telecommunications service entrance to the building, including the entrance point through the building wall, and continuing to the entrance room or space. The entrance facility may contain the backbone pathways that link to other buildings in campus situations. Antenna entrances may also constitute part of the entrance facility.

7.2 Building site considerations

7.2.1 General

All carriers involved in providing services to the building shall be contacted to establish their requirements and explore alternatives for delivery of their services. The location of other utilities, such as electrical, water, gas, and sewer, shall be considered in the selection, at each site, of the telecommunications entrance facility.

7.2.2 Permits

Easements, permits, or right-of-ways are required for construction of the pathway. Crossings of railways, bridges, or navigable waters may require special permits.

7.2.3 Alternative entrance

An alternative entrance facility should be provided where security, continuity of service, or other special needs exist.

7.2.4 Antenna Fields

When locating antenna fields, line-of-sight interference and signal interference should be avoided.

 © EAC 2005 — All rights reserved

7.3 Service entrance pathway

7.3.1 General

A service entrance pathway shall be provided.

7.3.1.1 Routes

Underground or aerial routes are usually provided.

7.3.1.2 Number of pathways

In determining the total number of pathways required, the planner shall consider the following:

a) type and use of building;

b) growth;

c) difficulty of adding pathways in the future;

d) alternative entrance; and

e) type, size and number of cables likely to be installed.

7.3.2 Underground

7.3.2.1 General

An underground pathway is a component of the entrance facility consisting of conduit and/or duct, and may include access-hole(s). See Figure 14.

7.3.2.1.1 Consideration

Pre-planning shall include consideration of land development, topographical limitations and grading of the underground facility to permit drainage. The facility may require venting of gaseous vapours. Vehicular traffic shall be considered in determining the strength of cover over the facility and whether concrete encasement is necessary.

7.3.2.1.2 Network service connection at the property boundary

The 100 mm diameter conduit provided by the licensed cabler shall be capable of inter-connection with the conduit provided by the carrier.

7.3.2.2 Conduit layout design

7.3.2.2.1 Types

All entrance conduits shall be 100 mm diameter and conform to the carriers' requirements, or alternatively to EAS 178. Conduit shall be coloured white. It is available in the following types and sizes:

a) PVC 2 mm — a thin-wall white plastic requiring concrete encasement.

b) PVC 4 mm — a heavier-walled self-supporting white plastic conduit which can be directly buried.

c) PVC 6 mm — for heavy vehicular load applications.

NOTE A rigid metal conduit made of galvanized steel is also acceptable.

For details of conduits refer to IEC 60364.

© EAC 2005 — All rights reserved

Some carriers specify different PVC conduit grades to those covered in EAS 178. However, couplings and bends are available for interconnection.

PVC 2 mm concrete-encased conduits and 6 mm heavy-wall conduits are not commonly used types; a 4 mm wall-thickness, self-supporting, white PVC conduit is the preferred type.

7.3.2.2.2 Quantity

After determining the size and number of the telecommunications cables, the conduit type(s) need to be selected and the required number determined. Generally, a conduit can take a single cable or multiple cables. A conduit can be sub-ducted for optical fibre cable installation.

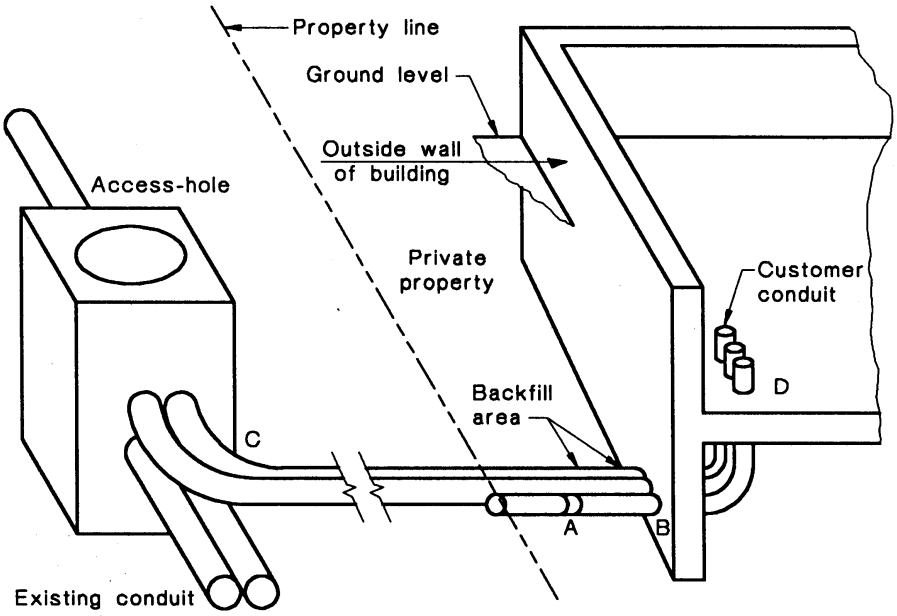

NOTES:
1 Placing depth.
2 A-B-steel conduit crossing disturbed earth.
3 Conduit A-C-steel or PVC or can be concrete-encased if more than four.
4 Slope conduit away from B-towards access-hole.
5 Conduit ends to be plugged at time of placement (both ends).
6 Leave one or more spare conduits from A-D, capped at A, for other use.

Figure 14 — Typical underground entrance

7.3.2.2.3 Bends

Bends in underground conduits and ducts are undesirable. However, when required, bends in conduit and duct runs shall be limited to the equivalent of no more than two 90° bends. Bend radii shall be a minimum of 30 times the outside diameter of the cable used. For all bends in other than steel conduit or duct, the bend section shall be concrete encased.

7.3.2.2.4 Separation

Separation from other service structures, and depth of cover, shall be provided.

7.3.2.2.5 Drain slope

Underground conduit should be installed such that a slope exists at all points of the run to allow drainage and prevent the accumulation of water. A drain slope of no less than 10 mm per metre is desirable.

 © EAC 2005 — All rights reserved

7.3.2.2.6 Sunlit areas

PVC conduit to meet carriers' requirements is preferable for any section of conduit exposed to sunlight. However, conduit meeting the requirements of EAS 178 can also be used. When a length of conduit is exposed, such as in bridge construction, the use of an expansion joint shall be provided.

7.3.2.3 Access-hole and pit design

7.3.2.3.1 General Access

-holes and pits are underground chambers constructed on cable routes to enable cables (and sub-ducts) to be installed and to give access to cables for jointing and maintenance.

7.3.2.3.2 Design (see Figures 15 to 18 inclusive)

Access-holes shall be equipped with a sump, corrosion resistant pulling iron, cable racks and ladders. Concrete used for construction of these chambers shall be of at least 40 MPa strength.

7.3.2.3.3 Location

Locate access-holes at the most suitable points for connection of lateral cable pillar terminals and cross-connecting cabinets. Wherever practicable access-holes should be spaced at approximately 230 metre intervals. For optical fibre cable routes, access-hole spacing should be at approximately 1 km intervals.

a) At street corners, place access-holes far enough back from the property lines or intersection, to avoid disturbance if the corner is reconstructed at a later date. (Minimum distance from property line: 3 metres). Where the conduit route changes direction use preformed PVC bends to lead conduits into the access-hole.

b) Keep access-holes clear of driveways, property entrances and other locations where they may be crossed by vehicular traffic.

c) Site access-holes so as to encroach as little as possible on to the footpath space allocation of other authorities.

d) Align the access-hole so that the cover is square to, and parallel to, the property line.

7.3.2.3.4 Methods of construction

Access-holes may be constructed using any of the following materials:

a) Poured concrete (ready-mixed or mixed on site).

b) Clay or concrete house bricks.

c) Hollow concrete modular building blocks.

d) Pre-cast concrete slabs.

The access-hole may also be cast complete, in concrete.

7.3.2.3.5 Access-hole dimensions

In sizing the access-hole consideration shall be given to the size of the ultimate duct structure, the need for equipment to be located in the access-hole, and coexistence with other utilities (see Table 3).

© EAC 2005 — All rights reserved

Table 3 — Typical dimensions of rectangular footpath access-holes

Number of ducts	Internal dimensions in metres		
	Length		Width
	Duct entry close to side walls	Duct entry in centre of end of walls	
Up to 4	2.0	2.0	0.9
5 - 8	3.0	3.0	1.1
9 - 16	3.7	4.25	1.25
17 - 24	3.7	4.25	1.25
25 - 36	3.7	4.25	1.25
37 - 48	4.9	5.7	1.5
49 - 64	4.9	5.7	1.5

NOTES

1 The dimensions given in this Table may be varied to suit local conditions and requirements, or to conform with existing construction.

2 Where conduits are arranged so as to enter close to the side walls, the length of the access-hole may be reduced as shown above.

3 Depth of access-hole depends upon the depth at which conduits are laid, and will normally be 300 mm to 450 mm below the lowest duct, with a minimum depth of 1.1 m.

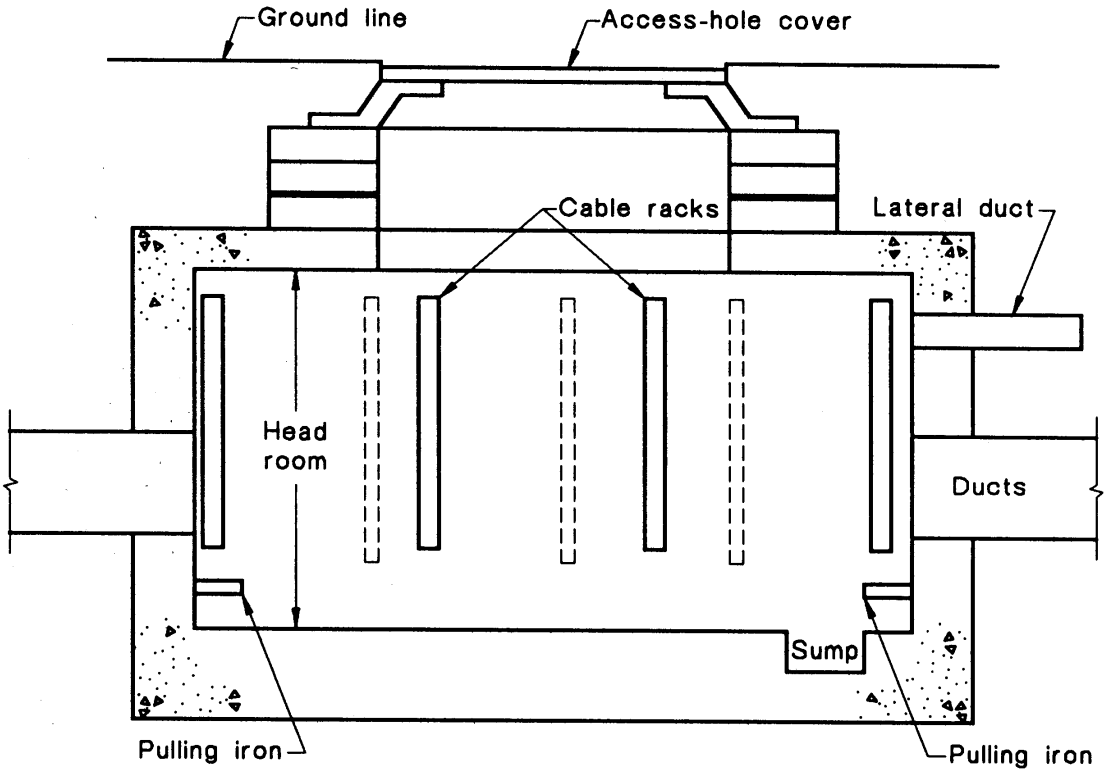

Figure 15 — Typical access-hole

 © EAC 2005 — All rights reserved

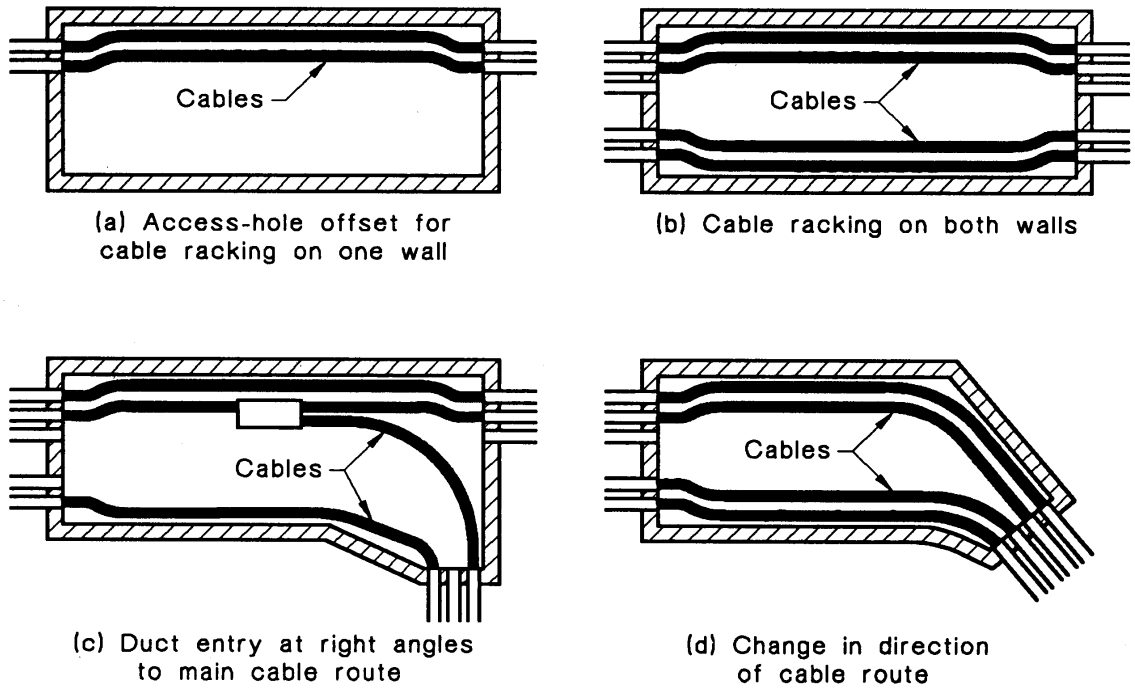

Figure 16 — Typical access-hole designs

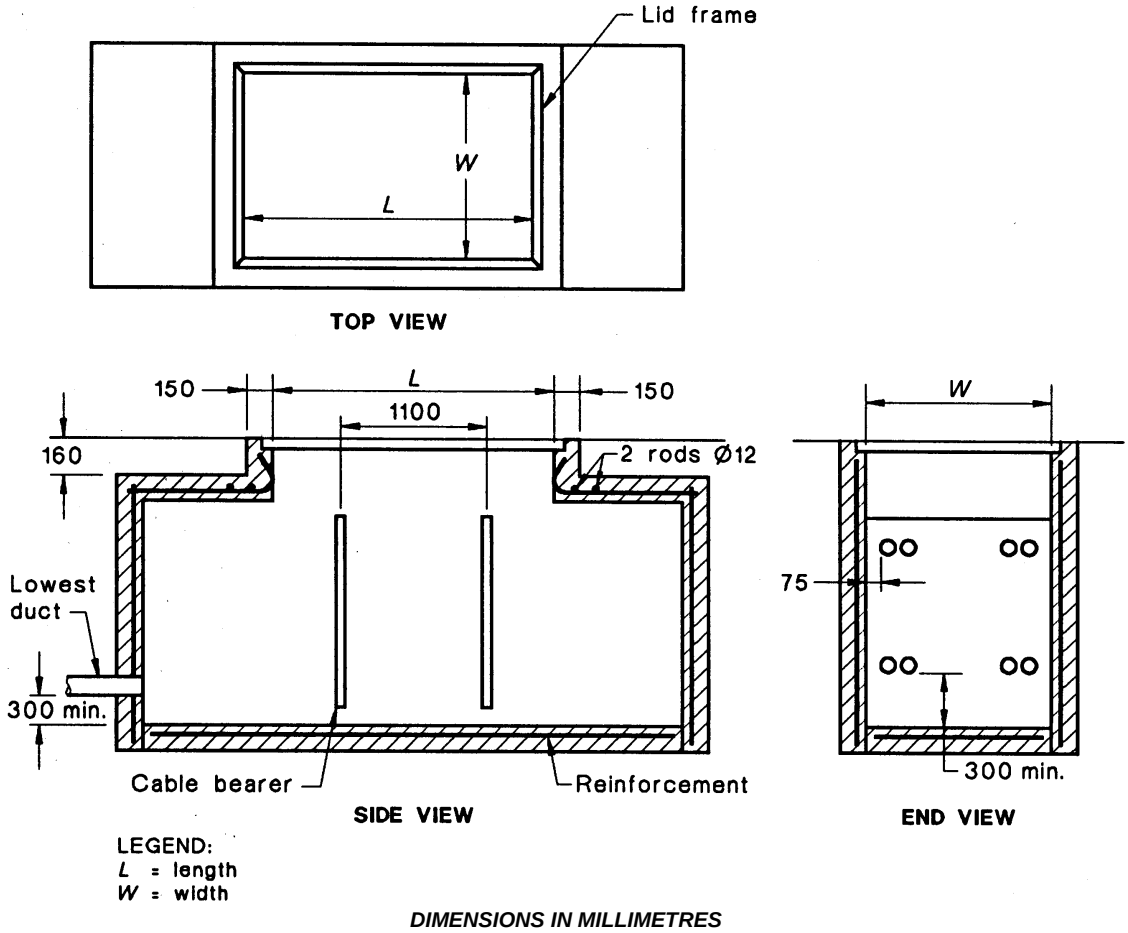

Figure 17 — Access-hole dimensions

© EAC 2005 — All rights reserved

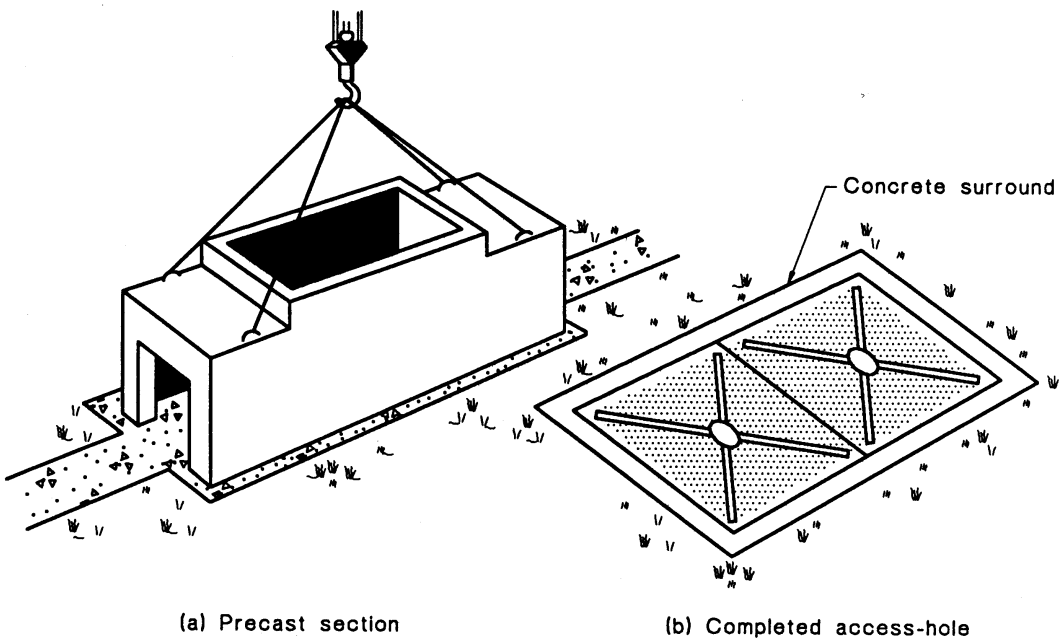

Figure 18 — Typical rectangular pre-cast concrete access-hole

7.3.2.3.6 Concrete access-holes

The precast access-hole shell is set on a poured concrete floor and the ends built in with concrete around the ducts. The access-hole cover is fitted and concrete surround poured on-site.

7.3.2.3.7 Location and spacing

When determining access-hole locations, consideration shall be given to ground topology, access, building location, jointing, and soil conditions.

Access-holes shall be provided when the conduit or duct section changes direction and in long runs (typically when the length exceeds 230 m).

7.3.2.3.8 Access-hole frames and covers

Access-hole frames and covers shall meet the relevant Kenya standards. These include types for heavy vehicular traffic. Roadway access-holes are not recommended, for safety reasons (see Table 4).

Table 4 — Access-hole openings and cover sizes

Number of ducts	Approximate opening size		Size in metres
	Length	Width	Number of covers
Up to 8	1.2	0.75	2
9 to 36	1.2	1.2	4
37 to 64	1.8	1.2	6
Roadway access-hole	1.05	0.52	2

7.3.2.3.9 Pits (see Figure 19)

Considerations for the use of pits are as follows:

a) A pit may be used to expedite pulling in a cable when:

   i) the bends exceed a total of 180 degrees or two bends; or

 © EAC 2005 — All rights reserved

ii) the section length of conduit requires the pulling in of cable in two segments.

b) A pit shall not exceed 1.3 m in length × 0.5 m in width × 0.9 m in depth and should not be used when the ultimate or total requirements exceed the capacity of two 100-mm conduits, in and out.

c) A pit shall not be used in place of an access-hole in a main conduit route.

d) Conduits entering the pit shall be aligned on opposite walls of the pit at the same elevation.

7.3.3 Direct buried facility

7.3.3.1 General

A direct-buried facility is a component of the entrance facility where the telecommunications service cables are completely encased in the earth. Direct burial is achieved by trenching, augering, boring, or ploughing. Ploughing is not covered in this Standard.

7.3.3.2 Design

7.3.3.2.1 Route

The route selected shall be co-ordinated with landscaping, fencing, trees, paved areas, and other services, and should follow a natural parallel line of sight such as property lines, footpaths, and driveways. Because of possible fences and shrubbery, a distance of approximately 2 m should be maintained from the property line.

7.3.3.2.2 Shared trench

The design and installation of telecommunications media with other services in a shared trench shall be co-ordinated and shall meet applicable codes.

7.3.3.2.3 Trenching

When trenching for the installation of direct-buried cable, it may be desirable to place empty conduit in the same trench for possible future use.

7.3.3.2.4 Augering or boring

Augering or boring (pipe-pushing) shall be considered where trenching and ploughing are inappropriate.

7.3.4 Aerial

An aerial facility is a component of the entrance facility consisting of poles, cable support strand, and support system. When contemplating the use of aerial facilities, consider the following-

a) aesthetics of the building and surrounding location;

b) ambient temperature range and wind speed;

c) applicable codes;

d) clearances and separation for electrical and road crossings;

e) mechanical protection;

f) span lengths;

g) building attachments;

© EAC 2005 — All rights reserved

h) future plant augmentation; and

i) number of cables involved.

NOTE See Figures A.6 to A.8 in Annex A for illustrations of some of the many hardware devices for aerial cable installations.

7.3.5 Tunnels

When use of tunnels is contemplated as in an entrance facility, refer to **3.3.3**.

 © EAC 2005 — All rights reserved

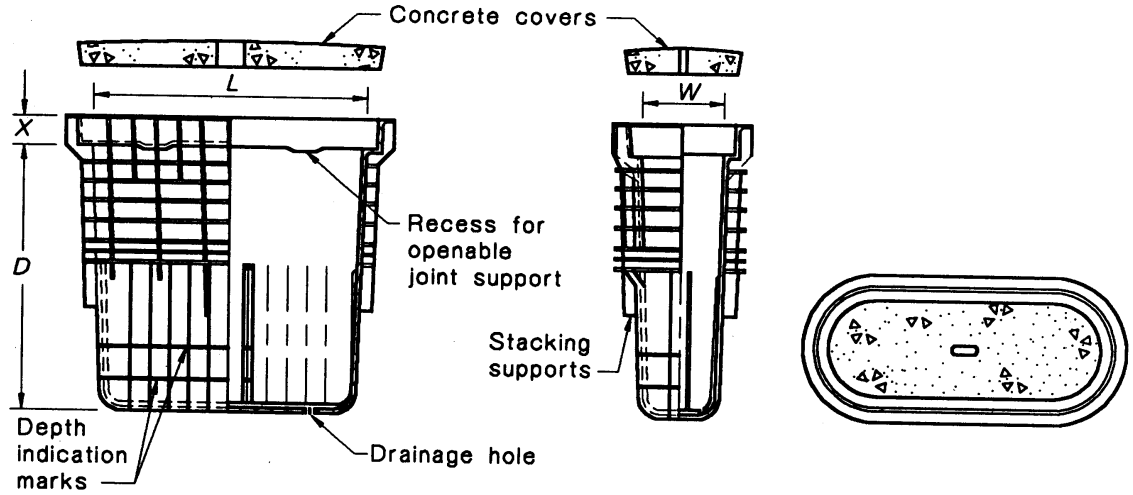

(a) Small size plastic pits

millimetres

Pit type	Dimensions				Reinforced concrete cover	Maximum pipe size
	L	*W*	*D*	*X*		
P1	419	155	350	40	Yes	35
P2	553	180	514	46	Yes	50
P3	663	243	570	50	Yes	100
P3	584	281	760	50	Yes	100

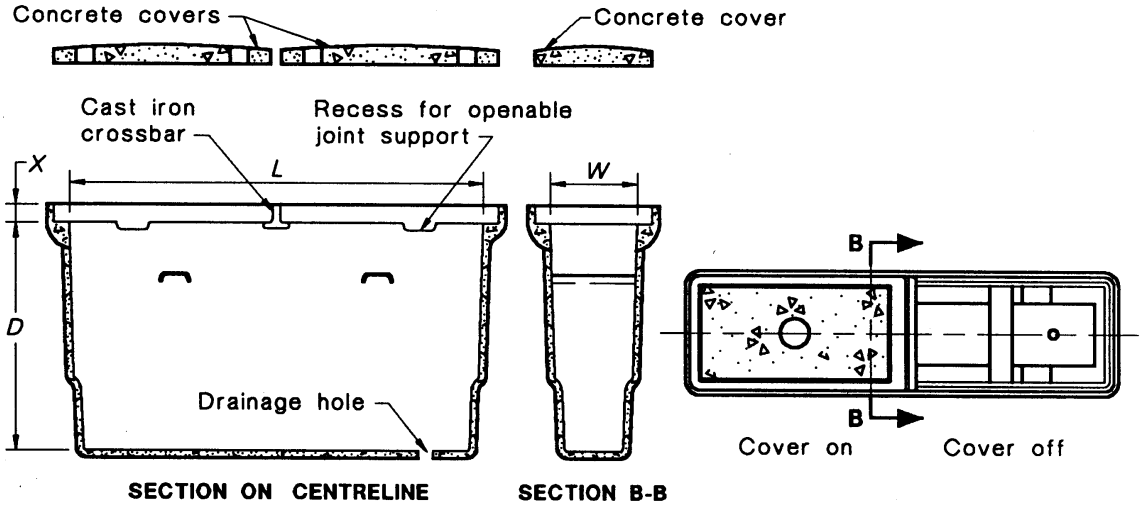

LEGEND:
L = length
W = width
D = depth
X = depth of cover recess

(b) Large size cement pits J6, J8 and J9

millimetres

Pit type	Dimensions				Reinforced concrete cover	Maximum pipe size
	L	*W*	*D*	*X*		
J6	1 270	460	612	50	Yes	2 x 100
J8	1 270	460	843	50	Yes	2 x 100
J9	1 930	460	843	50	Yes	2 x 100

Figure 19 — Jointing pits

© EAC 2005 — All rights reserved

7.4 Entrance point

7.4.1 General

An entrance point is a component of the entrance facility, which is the point of penetration of the foundation wall.

7.4.2 Design

7.4.2.1 Type and sizing

Except for tunnel entrance facilities, 100 mm white PVC conduit shall be the pathway utilized for the entrance point.

7.4.2.2 Penetration and termination

The conduit shall extend into undisturbed earth, and a minimum of 600 mm beyond the exterior of the foundation. When terminated in a pit, the conduit shall be reamed and bushed, if required. When terminated at the inside of the building wall, the conduit shall have a smooth, bell-shaped finish unless it extends to a remote entrance room, space, or area (see Figure 20). The conduit or sleeve shall be securely fastened to the building.

7.4.2.3 Drainage

The conduit shall slope downwards towards the exterior. Where water infiltration is anticipated, an exterior drainage box shall be installed at the entrance point.

7.4.2.4 Gas, water, and vermin

All conduit shall be plugged to restrict infiltration of gas, water and vermin. To further ensure that gases do not enter the building, an external venting system may need to be installed.

7.4.2.5 Access-hole

An access-hole shall be installed inside the building at the entrance point for cable pulling and splicing when:

a) the building conduit is extended from the entrance conduit;

b) warranted by excessive conduit length; or

c) the number of bends exceeds the equivalent of two 90° bends.

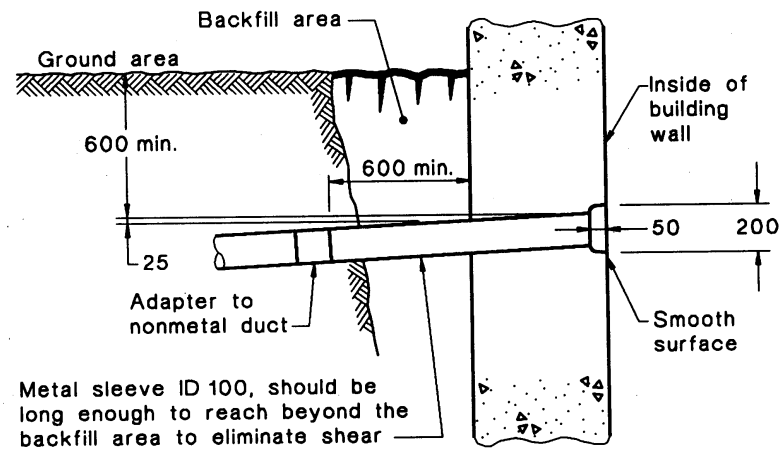

DIMENSIONS IN MILLIMETRES

Figure 20 — Entrance conduit or sleeve termination

 © EAC 2005 — All rights reserved

7.5 Entrance room or space

7.5.1 General

7.5.1.1 Purpose

The entrance room or space is the component of the entrance facility that provides space for the termination of either an entrance or backbone cable. It may contain network interface devices and telecommunications equipment. Where telecommunications equipment (e.g. customer switching system) is located in the entrance room or space, the entire room or space shall meet the requirements for an equipment room as specified in clause **6**. If network interface devices and telecommunications equipment are required in the entrance room, additional space will be needed.

7.5.1.2 Pathway sizing

The size of pathways, between the entrance point and the entrance room or space, shall be the same as the entrance Pathways unless the route is through open accessible areas. In such cases, the pathway created may be only for those cables initially installed with supporting structure adequate to accommodate future pathway requirements.

7.5.1.3 Antenna entrance rooms

Antenna entrance rooms shall be designed to meet the carrier requirements. The antenna pathway from the antenna field to the entrance room shall provide isolation for the antenna cables from other backbone cables. The antenna entrance room shall be located as close as practicable to the antenna field.

7.5.2 Location

The entrance room or space shall be located in a dry area, not subject to flooding, and as close as practicable to the vertical backbone pathways.

7.5.3 Design

7.5.3.1 General

The decision whether a room or open area is provided should be based on security, quantity, type of terminations and equipment, size of building, and physical location within the building. For buildings exceeding 2 000 m^2 usable floor space, an enclosed room should be provided.

7.5.4 Size

7.5.4.1 Cable termination frames

In buildings with up to 10 000 m^2 of usable floor space, wall-mounted terminating hardware may be suitable. Buildings of larger floor area may require freestanding frames for cable terminations.

7.5.4.2 Space allowance

The following Tables specify space for all telecommunications equipment and associated cross-connections. Table 5 is based upon terminations and equipment mounted on a 2.5 m high wall. Table 6 is based upon terminations and equipment mounted on freestanding racks.

© EAC 2005 — All rights reserved

Table 5 — Minimum equipment and termination wall space

Gross floor space m^2	Wall length mm
500	990
1000	990
2000	1050
4000	1800
5000	2310
6000	2400
8000	3000
10000	3630

Table 6 — Minimum equipment and termination room space

Gross floor space m^2	Room area m^2
Up to 10000	7
20000	10
40000	14
50000	17
60000	20
80000	24
100000	30

7.5.5 Provisioning

7.5.5.1 Lighting

Light fittings shall be mounted to provide a minimum floor clearance of 2300 mm above the finished floor, and provide an average illuminance of 600 lux measured on a horizontal plane 850 mm above the finished floor.

7.5.5.2 False ceiling

A false ceiling shall not be provided.

7.5.5.3 Door

The access door shall be a minimum of 910 mm wide and 2000 mm high and shall be fitted with a lock with internal release for emergency use.

7.5.5.4 Surface finish

Floors, walls, and ceiling shall be treated to eliminate dust. Finishes shall be light in colour, to enhance room lighting.

7.5.5.5 Electrical power

7.5.5.5.1 Capacity and outlets

A minimum of two dedicated 10 A, 240 V a.c. double electrical outlets, each on separate circuits, shall be provided for equipment power. In addition, 'convenience' double outlets shall be placed at 1.8 m intervals around the perimeter walls, at a height of 150 mm above the floor. If emergency power is available, consideration shall be given to automatic switchover of power.

 © EAC 2005 — All rights reserved

7.5.5.5.2 Emergency power

If an emergency power source is available in the building, it is desirable that at least one of the duplex outlets be so supplied.

7.5.5.6 Earthing

Provision shall be made to run an insulated earth to the building earthing electrode (see **6.2.3.11**).

8 Miscellaneous items

8.1 Earthing and bonding

All telecommunications earthing and bonding shall comply with the applicable codes (A.5).

8.2 Firestopping

All telecommunications firestopping shall comply with the applicable codes.

8.3 Security

Attention shall be given to the provision of security for cabling and equipment, particularly in multi-tenant buildings, to ensure that unauthorized access and misuse of services cannot readily be achieved or remain undetected. This includes equipment rooms, pathways, closets, entrance facilities and intermediate distribution frames.

8.4 Miscellaneous pathways

8.4.1 Lift telecommunications

Cabling access shall be provided from the nearest telecommunications closet to each lift motor room. This provision shall apply to passenger, freight, and window-washing lifts and be co-ordinated with the lift contractor.

8.5 Separation of pathway and space from electromagnetic energy sources

8.5.1 Considerations

The planning of telecommunications pathways and spaces shall give consideration to nearby electrical noise sources, such as electric power cables, radio frequency (RF) sources, large motors and generators, induction heaters and arc welders. Co-installation of telecommunications cable and power cable is covered in KS 662. Additional precautions shall be taken to protect the integrity of information carried by copper telecommunications cable plant.

8.5.2 Capacitively and inductively coupled electrical noise sources

Closed metal pathways (e.g. conduits) generally provide adequate protection from nearby capacitively coupled (rapid changes in large voltages) noise sources typically found in commercial buildings. In cases where inductively coupled (rapid changes in large currents) noise sources are a problem, the closed metal pathway section in proximity to the source shall be of ferrous (or equivalent) induction suppression material.

8.5.3 Routing of unshielded pathways

Open or non-metal pathways (e.g. open tray or plastic duct) shall be placed with sufficient separation from noise sources to eliminate any potential coupling problems. These pathways shall be routed a minimum of 300 mm away from fluorescent lighting fixtures.

© EAC 2005 — All rights reserved

Special attention shall be given to the routing of such pathways away from ballasts and high intensity discharge devices.

8.5.4 Minimum separation from power wiring

Minimum separation distances between pathways and power wiring are shown in Table 7.

8.6 Bend radii for special cables (e.g. optical fibre)

Bends, pulling boxes and splice boxes must be dimensioned to ensure manufacturers' instructions, with regard to bend radii of special cables, can be adhered to.

Table 7 — Separation between power and telecommunication cables (including telecommunications earthing cables)

Circuit rating kVA	Separation distance, mm	
	Unshielded power cables	Shielded power cables
≤ 1	300	25 (see Note 1)
> 1 ≤ 2	450	
> 2 ≤ 5	600	
> 5	1500	

NOTE 1 This distance would only be allowable where there is an interposing insulating barrier, or earthed, continuous metal barrier between electrical cabling and telecommunications cabling.

NOTE 2 This applies to a nominal phase-to-phase voltage of 415 V existing in free air.

NOTE 3 These distances have been recommended to minimize interference as distinct from those distances listed in IEC 60364, which refer to safety isolation.

 © EAC 2005 — All rights reserved

Annex A
(informative)
Additional section information

A.1 General

This Appendix provides additional information on the previous Sections.

A.1.1 Horizontal pathways

Access floors, in particular, should be designed with attention to the following criteria.

A.1.2 Dynamic loads

Dynamic or rolling loads on castors are defined by frequency, size and hardness of the wheel, and the combined weight of the cart and its contents,

Rolling loads are the most important criteria because they have a more damaging effect on the access floor panel than static loads (see Table A.1).

A.1.3 Static loads

Static loads comprise concentrated loads and ultimate loads. Concentrated load values indicate the panel's ability to withstand point loads (PSL) and uniform loads (UDL). The ultimate load is the measure of the panel's ultimate strength before failure. This is then equated to a safety factor related to the panel's designed concentrated load (see Table A.2).

A.1.4 Impact loads

This defines the panel's ability to withstand accidental impact loads. Impact loads generate severe shocks which can cause structural panel damage.

A.1.5 Static charge dissipation

Indicates the floor system's capability to create an effective path for static charge dissipation is critical in areas where sensitive equipment is operated.

A.1.6 Acoustics

The acoustic properties of some floor panels, though suitable for an equipment or computer room, make the panels unsuitable for a quiet general office area.

A.1.7 Ducting

Figures A.1, A.2 and A.4 show examples of ducting and associated fittings used in horizontal pathways.

A.1.8 Cable trays and ladders

Figure A3 shows examples of these devices used to support cabling.

A.2 Telecommunications closet

The guidelines below apply to smaller buildings (see **5.2**).

© EAC 2005 — All rights reserved

A2.1 Small buildings

Buildings smaller than 500 m^2 may be served by small closets or cabinets.

A.2.2 Very small buildings

For smaller buildings (less than 100 m^2), wall cabinets, self-contained cabinets, or enclosed cabinets may be considered.

A.2.3 Walk-in closets

Walk-in closets should be a minimum of 1300 mm deep × 1300 mm wide to serve a floor area of up to 500 m^2.

A.2.4 Shallow closets

Shallow closets should 2be a minimum of 600 mm deep × 2600 mm wide to serve a floor area of up to 500 m (see Figure A.5).

A.3 Equipment room

A3.1 Requirements for equipment delivery

Telecommunications equipment can be large, have considerable weight, and require special handling. Because of these factors, the following considerations are important in selecting the equipment room location:

a) Equipment room accessibility for equipment delivery.

b) Driveway slope (see Note).

c) Will stairwells be used? If so, can they hold the weight?

d) Will such a heavy weight cause problems with floor loading on floors leading to the equipment room?

e) Will hoisting equipment be required?

f) Width of hallways leading to the equipment room.

NOTE Usually the maximum tilt that a fully pre-assembled cabinet will accept is 8°.

If some of these considerations cannot be satisfied, the equipment can be shipped disassembled, which may result in a longer delivery interval and additional testing.

A.4 Entrance facilities

A.4.1 **Aerial** (see Section 7.3)

Figures A6 through A8 illustrate some of the various hardware devices for aerial cable installations.

A.5 Earthing

Refer to EAS 372-1 for guidelines on earthing to meet safety requirements and to minimize electrical interference.

 © EAC 2005 — All rights reserved

Table A.1 — Performance criteria for dynamic loading of access floors

Rolling loads Local surface deformation 0.5 mm - Total permanent set 1 mm				
	Move-in 76 × 25 mm 10 passes over same path	Manual carts 152 × 50 mm 2000 passes over same path	Electric mailmobile 203 × 76 mm wheel 226 kg	Electric walkie cart 254 × 127 mm 20000 passes over same path
	kg	kg	Number of passes	kg
Genera office Medium duty Heavy duty	 272 454	 272 340	 40000 250000	 - -
Computer room Light duty Medium duty Heavy duty	 272 454 567	 272 340 454	 40000 250000 500000	 - - -
Inf. Process centre Light duty Medium duty Heavy duty	 454 567 680	 340 454 567	 250000 500000 -	 - - 680
Light manufacturing Medium duty Heavy duty	 680 907	 567 680	 - -	 608 907

The most common dynamic load is a rolling load which can be caused by-

a) 'move-in' equipment which creates infrequent random path heavy loads on small castors;

b) manual carts which create a frequent random path rolling load primarily in aisles; and

c) electrical carts which typically travel the same fixed path.

Table A.2 — Performance criteria for static loading of access floors

	Impact load Drop weight equals 305 mm^2, local surface deformation 1.55 mm	**Concentrated load 645 mm^2 Maximum deflection 2 mm from anywhere on the panel**	**Ultimate load 645 mm^2 Accepts load without failure**	**Uniform load Maximum deflection 1 mm from bottom anywhere on the panel**
	kg	**kN**	**kN**	**kg/m^2**
Genera office Medium duty Heavy duty	 45 57	 272 454	 816 1361	 732 1221
Computer room Light duty Medium duty Heavy duty	 45 57 68	 272 454 567	 816 1361 1701	 732 1221 1465
Inf. Process centre Light duty Medium duty Heavy duty	 57 68 79	 454 567 680	 1361 1701 2041	 1221 1465 1709
Light manufacturing Medium duty Heavy duty	 79 91	 680 907	 2041 1722	 1709 2441

The most common static load is a concentrated load imposed by stationary furniture and equipment such as a mainframe computer. The concentrated load rating of a panel is an accurate indicator of the total design load capacity under the most extreme conditions. The ultimate load specifies the static safety load of a panel. Uniform load is an outdated criterion for measurement that is included in this Specification for comparison only.

© EAC 2005 — All rights reserved

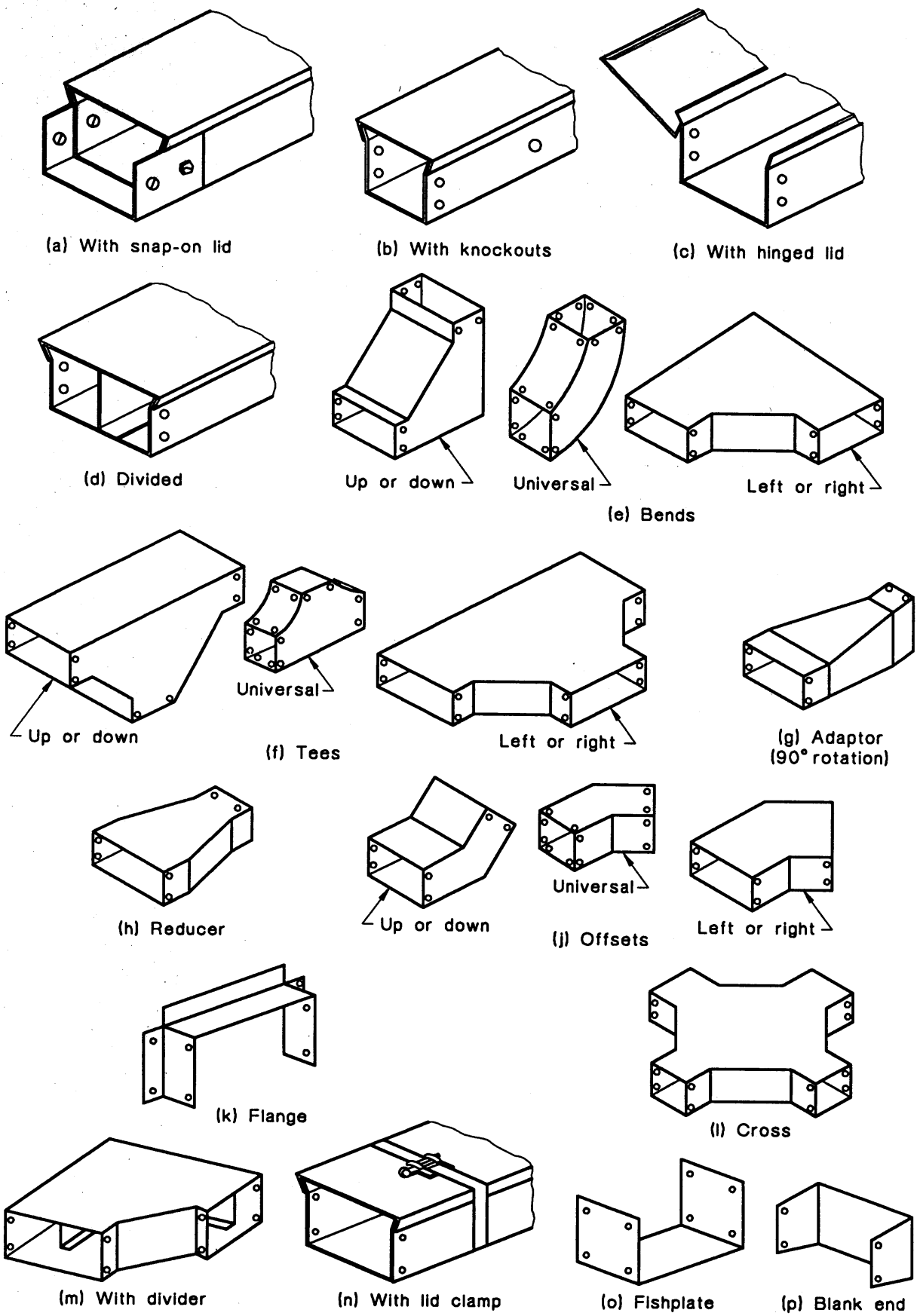

Figure A.1 — Typical freestanding duct and fittings

© EAC 2005 — All rights reserved

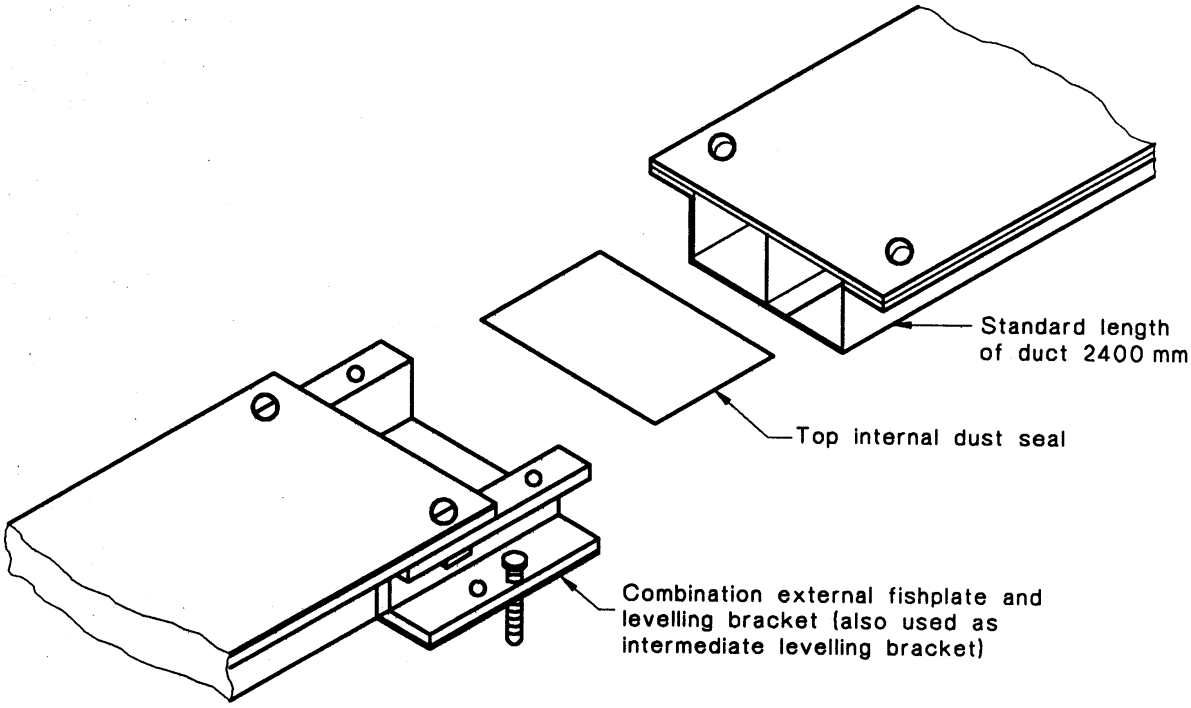

(a) Basic method of levelling and joining

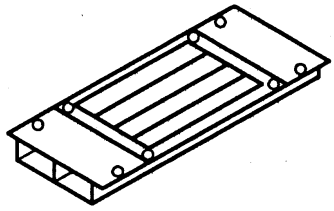

(b) Access type
(lid removed)

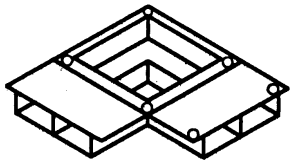

(c) Bend
(lid removed)

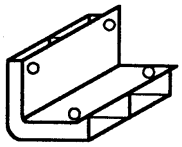

(d) Bend-up

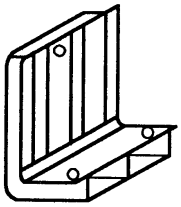

(e) Link-up

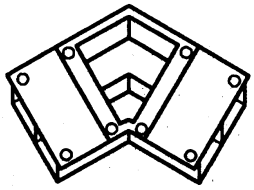

(f) Offset
(lid removed)

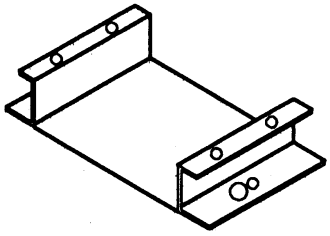

(g) Fishplate-leveller

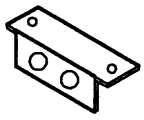

(h) Stop-end

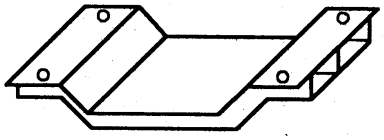

(j) Underpass

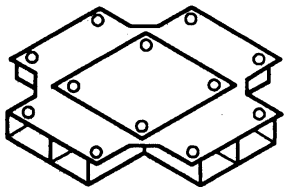

(k) Cross

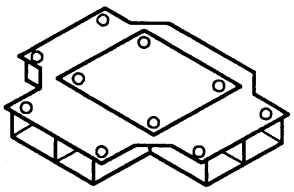

(l) Tee

Figure A.2 — Typical flushduct and fittings

© EAC 2005 — All rights reserved

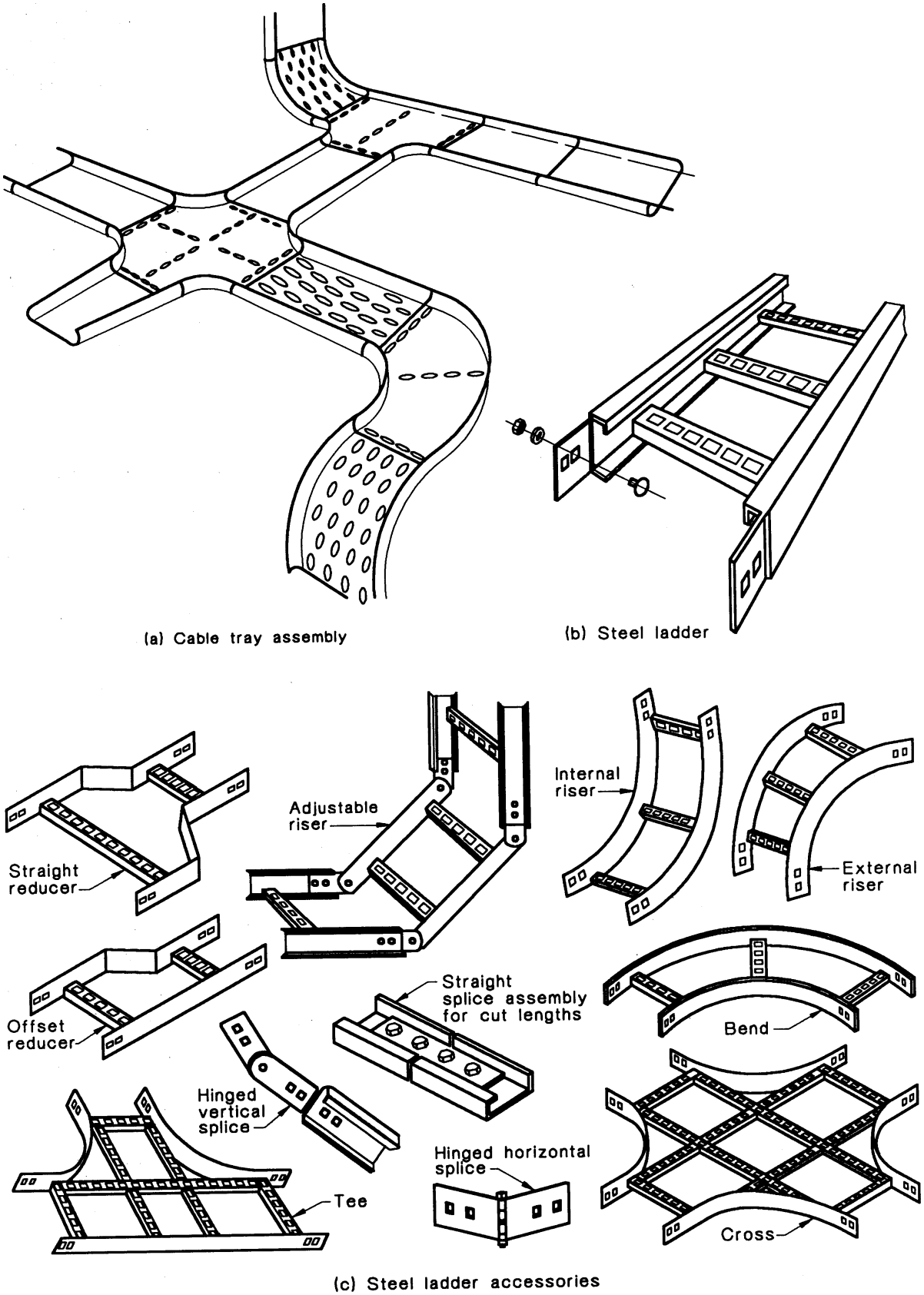

Figure A.3 — Typical cable tray, ladder and accessories

© EAC 2005 — All rights reserved

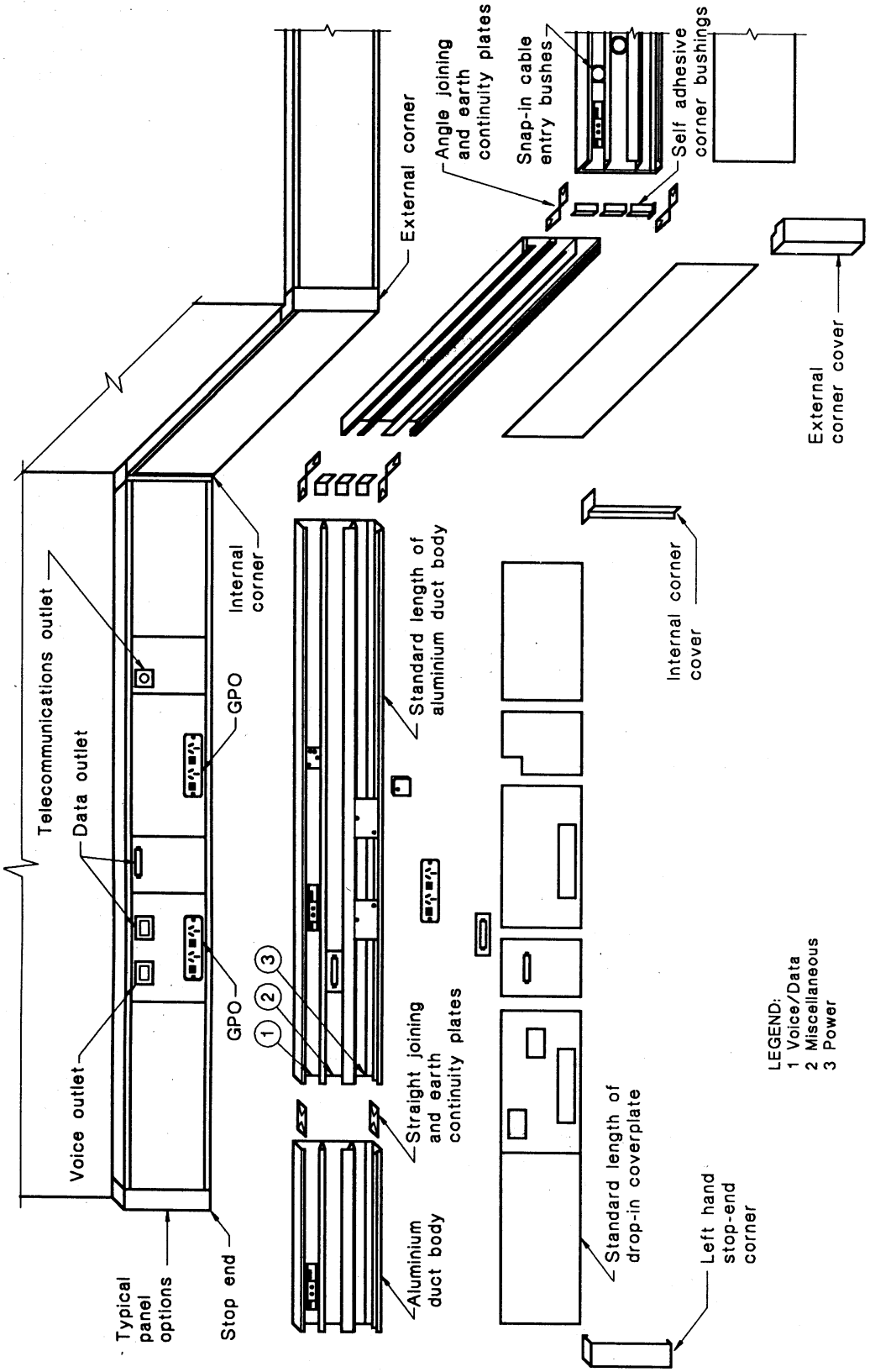

Figure A.4 — Typical perimeter ducting

© EAC 2005 — All rights reserved

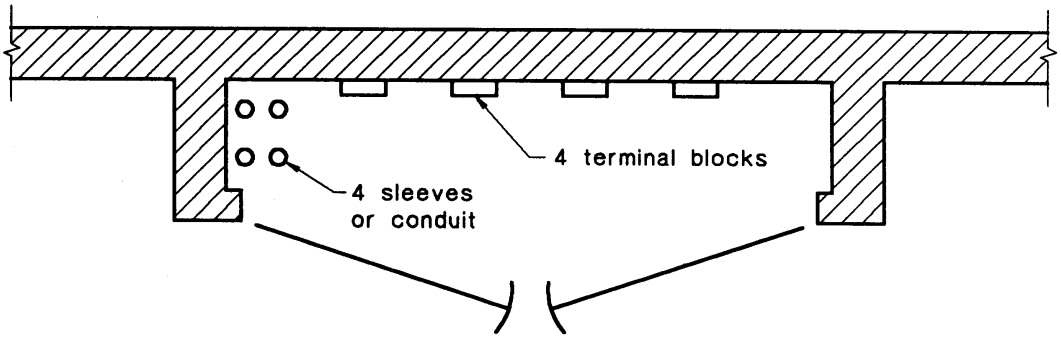

Figure A.5 — Typical shallow closet

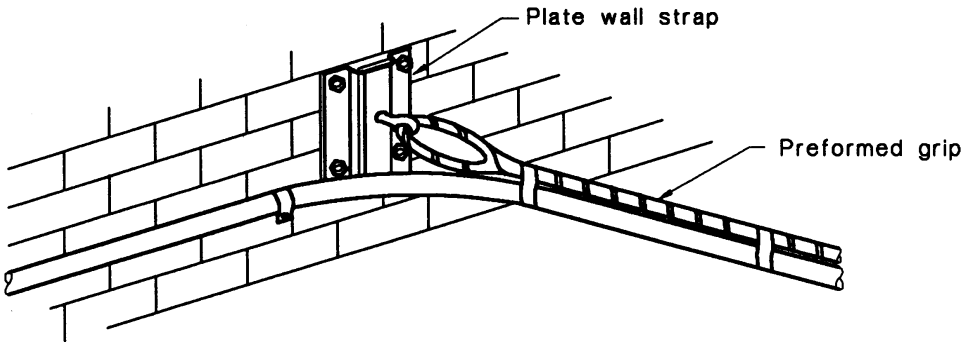

Figure A.6 — Plate wall strip

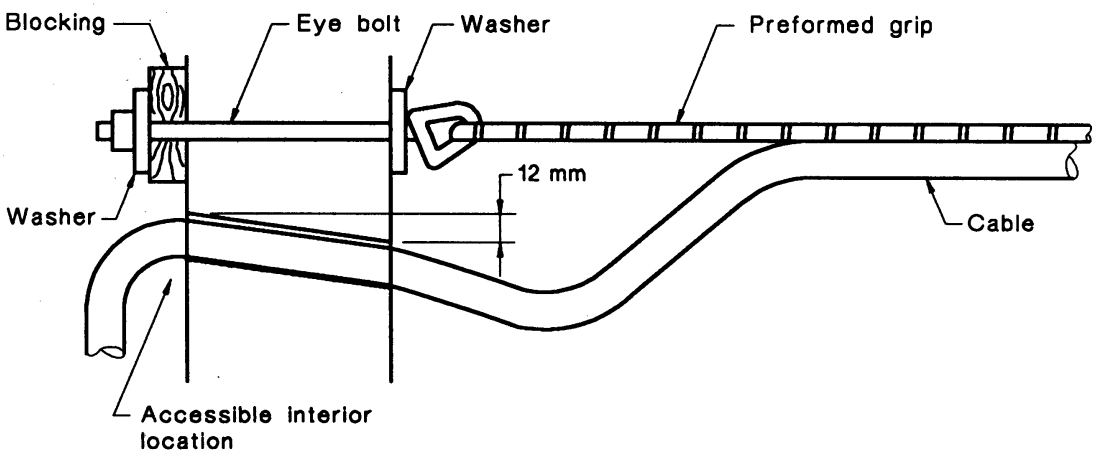

NOTE: All hardware heavy duty galvanized.

Figure A.7 — Large cable entrance

© EAC 2005 — All rights reserved

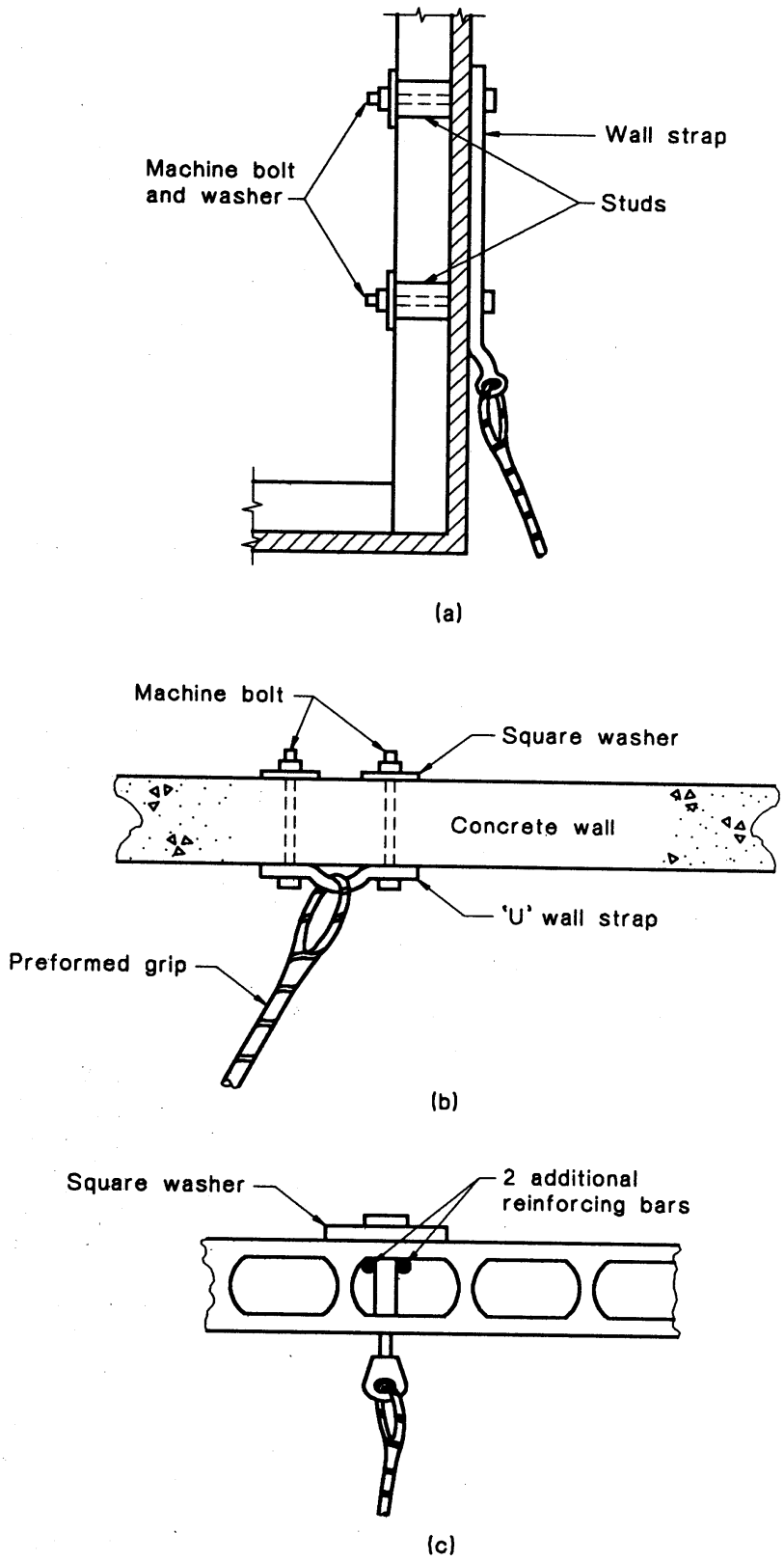

NOTE: All hardware heavy duty galvanized.

Figure A.8 — Attachment — Unfinished buildings

© EAC 2005 — All rights reserved

© EAC 2005 — All rights reserved