SASO ISO 5011:2007 م ق س أيزو ٥٠١١ : ٢٠٠٧

ISO 5011:2000 ISO 5011:2000

أجهزة تنظيف فتحة دخول الهواء لمحركات وضواغط الاحتراق الداخلي – اختبار الأداء

Inlet air cleaning equipment for internal combustion engines and compressors -- Performance testing

تقديم وطني

قامـت الهيـئة العربية السعودية للمواصفات والمقاييس بتبني المواصفة القياسية الدولية التالية دون إدخال أي تعديلات فنية عليها:

م ق س أيـزو ٥٠١١ : ٢٠٠٧ " أجهزة تنظيف فتحة دخول الهواء لمحركات وضواغط الاحتراق الداخلي – اختبار الأداء "

NATIONAL FOREWORD

The Saudi Arabian Standards Organization (SASO) has adopted without any technical changes the International Standard:

SASO ISO 5011:2007 " Inlet air cleaning equipment for internal combustion engines and compressors -- Performance testing "

INTERNATIONAL STANDARD

ISO 5011

Second edition
2000-12-01

Corrected and reprinted
2001-07-15

Inlet air cleaning equipment for internal combustion engines and compressors — Performance testing

Séparateurs aérauliques placés à l'entrée des moteurs à combustion interne et des compresseurs — Détermination des performances

Reference number
ISO 5011:2000(E)

© ISO 2000

PDF disclaimer

This PDF file may contain embedded typefaces. In accordance with Adobe's licensing policy, this file may be printed or viewed but shall not be edited unless the typefaces which are embedded are licensed to and installed on the computer performing the editing. In downloading this file, parties accept therein the responsibility of not infringing Adobe's licensing policy. The ISO Central Secretariat accepts no liability in this area.

Adobe is a trademark of Adobe Systems Incorporated.

Details of the software products used to create this PDF file can be found in the General Info relative to the file; the PDF-creation parameters were optimized for printing. Every care has been taken to ensure that the file is suitable for use by ISO member bodies. In the unlikely event that a problem relating to it is found, please inform the Central Secretariat at the address given below.

© ISO 2000

All rights reserved. Unless otherwise specified, no part of this publication may be reproduced or utilized in any form or by any means, electronic or mechanical, including photocopying and microfilm, without permission in writing from either ISO at the address below or ISO's member body in the country of the requester.

ISO copyright office
Case postale 56 • CH-1211 Geneva 20
Tel. + 41 22 749 01 11
Fax + 41 22 749 09 47
E-mail copyright@iso.ch
Web www.iso.ch

Printed in Switzerland

Contents

Page

Foreword v

1 Scope 1

2 Normative references 1

3 Terms, definitions, symbols and units 1
3.1 Terms and definitions 1
3.2 Symbols and units 3

4 Measurement accuracy and standard conditions 4
4.1 Measurement accuracy 4
4.2 Standard conditions 4

5 Test materials and test conditions 4
5.1 Test dust 4
5.2 Test oil for oil bath air cleaners 5
5.3 Absolute filter materials 5
5.4 Absolute filter mass 6
5.5 Temperature and humidity 6

6 Test procedure for dry-type air cleaners for automotive applications 6
6.1 General 6
6.2 Test equipment 6
6.3 Restriction and differential pressure test 8
6.4 Efficiency test 8
6.5 Capacity test 10
6.6 Filter element pressure collapse test 10
6.7 Variable air flow test 11
6.8 Presentation of data 11

7 Test procedure for dry-type air cleaners for industrial applications 12
7.1 General 12
7.2 Test equipment 12
7.3 Restriction and differential pressure test 13
7.4 Initial efficiency test procedure — Absolute filter method 13
7.5 Full-life efficiency and capacity test 14
7.6 Presentation of data 15
7.7 Scavenged air cleaner performance test 16
7.8 Precleaner performance test 17
7.9 Secondary element test procedure 18

8 Test procedure for industrial applications of oil bath air cleaners 19
8.1 General 19
8.2 Test equipment and conditions 19
8.3 Restriction and differential pressure test 20
8.4 Oil carry-over test 20
8.5 Full life efficiency and capacity test 21
8.6 Recovery test 21
8.7 Presentation of data 21

Annex A (normative) **Explanation of restriction, differential pressure and pressure loss of an air cleaner** 22

Annex B (normative) **Test equipment** 24

Annex C (informative) **Report sheet on performance testing of air cleaner equipment according to ISO 5011 — Automotive application** 33

© ISO 2000 – All rights reserved

Annex D (informative) **Report sheet on performance testing of air cleaner equipment according to ISO 5011 — Industrial application** **34**

Annex E (informative) **Presentation of results — Air cleaner restriction/differential pressure versus flow** **35**

Annex F (informative) **Presentation of results — Air cleaner capacity** **36**

Annex G (normative) **Airflow and resistance corrections to standard conditions** **37**

Bibliography **39**

© ISO 2000 – All rights reserved

Foreword

ISO (the International Organization for Standardization) is a worldwide federation of national standards bodies (ISO member bodies). The work of preparing International Standards is normally carried out through ISO technical committees. Each member body interested in a subject for which a technical committee has been established has the right to be represented on that committee. International organizations, governmental and non-governmental, in liaison with ISO, also take part in the work. ISO collaborates closely with the International Electrotechnical Commission (IEC) on all matters of electrotechnical standardization.

International Standards are drafted in accordance with the rules given in the ISO/IEC Directives, Part 3.

Draft International Standards adopted by the technical committees are circulated to the member bodies for voting. Publication as an International Standard requires approval by at least 75 % of the member bodies casting a vote.

Attention is drawn to the possibility that some of the elements of this International Standard may be the subject of patent rights. ISO shall not be held responsible for identifying any or all such patent rights.

International Standard ISO 5011 was prepared by Technical Committee ISO/TC 22, *Road vehicles*, Subcommittee SC 7, *Injection equipment and filters for use on road vehicles*.

This second edition cancels and replaces the first edition (ISO 5011:1988), which has been technically revised.

Annexes A, B and G form a normative part of this International Standard. Annexes C to F are for information only.

© ISO 2000 – All rights reserved

Inlet air cleaning equipment for internal combustion engines and compressors — Performance testing

1 Scope

This International Standard establishes and specifies uniform test procedures, conditions, equipment, and a performance report to permit the direct laboratory performance comparison of air cleaners.

The basic performance characteristics of greatest interest are air flow restriction or differential pressure, dust collection effciency, dust capacity, and oil carry-over on oil bath air cleaners. This test code therefore deals with the measurement of these parameters.

This International Standard is applicable to air cleaners used on internal combustion engines and compressors generally used in automotive and industrial applications.

2 Normative references

The following normative documents contain provisions which, through reference in this text, constitute provisions of this International Standard. For dated references, subsequent amendments to, or revisions of, any of these publications do not apply. However, parties to agreements based on this International Standard are encouraged to investigate the possibility of applying the most recent editions of the normative documents indicated below. For undated references, the latest edition of the normative document referred to applies. Members of ISO and IEC maintain registers of currently valid International Standards.

ISO 5167-1, *Measurement of fluid flow by means of pressure differential devices — Part 1: Orifice plates, nozzles and Venturi tubes inserted in circular cross-section conduits running full.*

ISO 12103-1, *Road vehicles — Test dust for filter evaluation — Part 1: Arizona test dust.*

3 Terms, definitions, symbols and units

3.1 Terms and definitions

For the purposes of this International Standard, the following terms and definitions apply.

3.1.1
air filter
air cleaner
device which removes particles suspended in the fresh charge as it is drawn into the engine

3.1.2
filter element
replaceable part of the air filter, consisting of the filter material and carrying frame

© ISO 2000 – All rights reserved

3.1.3
secondary element
air cleaner element fitted downstream of the primary element for the purpose of providing the engine with protection against dust in the event of

a) certain types of primary element failure, or

b) dust being present during the removal of the primary element for servicing

3.1.4
unit under test
either a single air cleaner element or a complete air cleaner assembly

3.1.5
single-stage air cleaner
air cleaner which does not incorporate a separate precleaner

3.1.6
multistage air cleaner
air cleaner consisting of two or more stages, the first usually being a precleaner, followed by one or more filter elements

NOTE If two elements are used, the first is called the primary element and the second one is called the secondary element.

3.1.7
precleaner
device usually using inertial or centrifugal means to remove a portion of the test dust prior to reaching the filter element

3.1.8
test air flow
measure of the quantity of air drawn through the air cleaner outlet per unit time

NOTE The flow rate is expressed in cubic metres per minute corrected to standard conditions.

3.1.9
rated air flow
flow rate specified by the user or manufacturer

NOTE It may be used as the test air flow.

3.1.10
scavenge air flow
measure of the quantity of air used to remove the collected dust from a precleaner

NOTE It is expressed as a percentage of the test air flow.

3.1.11
static pressure
pressure in a duct, at the observed air flow rate, measured by connecting a pressure gauge to a hole or holes drilled in the wall of the duct

NOTE In the tests specified in this International Standard, a static pressure is measured by a manometer (usually a liquid manometer) as a negative pressure difference against the atmospheric pressure and in the formulae this is treated as a positive value.

3.1.12
restriction
static pressure measured immediately downstream of the unit under test

© ISO 2000 – All rights reserved

3.1.13
differential pressure
difference in static pressure measured immediately upstream and downstream of the unit under test

3.1.14
pressure loss
measure of the loss of energy caused by an air cleaner at the observed air flow rate

NOTE 1 It is expressed as the differential pressure corrected for any difference in the dynamic head at the measuring points.

NOTE 2 For further information, see annex A.

3.1.15
absolute filter
filter downstream of the unit under test to retain the contaminant passed by the unit under test

3.1.16
efficiency
ability of the air cleaner or the unit to remove contaminant under specified test conditions

3.1.17
capacity
quantity of contaminant removed by the unit under test in producing specified terminal conditions

3.1.18
oil carry-over
appearance of oil at the cleaner outlet

3.1.19
test terminal condition
condition, relating to an air cleaner, the occurrence of which signifies the end of the test

NOTE A test terminal condition may be, for example, any one of the following:

— the restriction or the differential pressure reaches a specified or agreed value;

— the dust-removing efficiency or some other performance parameter falls to a specified or agreed value;

— oil carry-over occurs;

— a dust pot becomes filled.

3.1.20
automotive application
air cleaner generally used for internal combustion engines in passenger cars

3.1.21
industrial application
air cleaner generally used for internal combustion engines in heavy-duty trucks, construction equipment and agricultural tractors

3.2 Symbols and units

The following applied units, according to ISO 1000, are used.

© ISO 2000 – All rights reserved

Quantity	Symbol	Unit
Volume flow rate	q_V	m^3/min
Velocity	v	m/s
Density	ρ	kg/m^3
Mass flow rate	q_m	kg/min
Pressure	p	Pa
Restriction	Δp_r	Pa
Differential pressure	Δp_d	Pa
Pressure loss	Δp_l	Pa
Mass	m	g
Time	t	s

4 Measurement accuracy and standard conditions

4.1 Measurement accuracy

Measure the air flow rate to within ± 2 % of the actual value, except for the variable air flow test when accuracy may be ± 2 % of the maximum value of the cyclic flow rate through the cleaner.

Measure the differential pressure and restriction to within 25 Pa of the actual value.

Measure the temperature to within 0,5 °C of the actual value.

Measure the mass to within 1 % of the actual value except where noted.

Measure the relative humidity (RH) with an accuracy of ± 2 % RH.

Measure the barometric pressure to within 3 hPa.

The measurement equipment shall be calibrated at regular intervals to ensure the required accuracy.

4.2 Standard conditions

All airflow measurements shall be corrected to a standard condition of 20 °C at 1 013 hPa (1 013 mbar).

See annex G.

5 Test materials and test conditions

5.1 Test dust

5.1.1 Grade

The test dust to be used shall be ISO 12103 - A2 (ISO Fine) or ISO 12103 - A4 (ISO Coarse), subject to agreement between the filter manufacturer and client. The chemical analysis and the particle size distribution shall conform to ISO 12103-1.

© ISO 2000 – All rights reserved

In the absence of an agreement on the dust

— for single-stage filters, use ISO Fine test dust, and

— for multistage filters, use ISO Coarse test dust.

5.1.2 Preparation

Before using the test dust, a quantity sufficient to cover the test requirements shall be mixed in a sealed container for a minimum of 15 min. The test dust shall then be allowed to become acclimatised to a constant mass under the prevailing test conditions.

NOTE To ensure a constant rate of dust feed with some dust feeders, it may be found necessary to heat the dust prior to being fed to the injector.

5.2 Test oil for oil bath air cleaners

The oil used for testing oil bath air cleaners shall be that specified by the filter manufacturer and agreed by the user for use at the appropriate ambient temperature. If an oil is not specified, the test oil shall be a heavy-duty oil and the viscosity at the temperature of the test shall be adjusted as follows:

— 85 mm^2/s for oil carry-over and restriction/differential pressure tests;

— 330 mm^2/s for efficiency and capacity tests, including an oil carry-over test after the capacity test.

5.3 Absolute filter materials

5.3.1 Filter media

The absolute filter may consist of fibreglass media with a minimum thickness of 12,7 mm and a minimum density of 9,5 kg/m^3.[1] The fibre diameter shall be 0,76 μm to 1,27 μm and the moisture absorption shall be less than 1 % by mass after exposure to 50 °C and 95 % relative humidity for 96 h. The absolute filter media shall be installed with nap side facing upstream, in an airtight holder that adequately supports the media. The face velocity shall not exceed approx. 0,8 m/s to maintain media integrity.

As an alternative, a non-woven filter media with the efficiency described in 5.3.2 may be used.

To reduce any subsequent errors in the measurements caused by losses of fibres or materials, the absolute filter shall be subject to a flow of at least 110 % of the rated flow of ambient air for 15 min before the first test weighing.

NOTE The use of an absolute filter with a backing will minimize fibre loss.

5.3.2 Validation of absolute filter media efficiency, E_a

Arrange two absolute filters in tandem. Perform a filter efficiency test and determine the mass increase of each absolute filter according to the test procedure given in 6.4.3 or 7.5.2:

$$E_a = \frac{\Delta m_A}{\Delta m_A + \Delta m_B} \times 100\ \% \qquad (1)$$

where

E_a is the absolute filter efficiency;

1) A suitable material is commercially available. Details may be obtained from the secretariat of ISO/TC 22 or from the ISO Central Secretariat.

© ISO 2000 – All rights reserved

Δm_A is the mass increase of upstream absolute filter;

Δm_B is the mass increase of downstream absolute filter.

The absolute filter efficiency should be a minimum of 99 % for the contaminant presented to it.

5.4 Absolute filter mass

The absolute filter shall be weighed, to the nearest 0,01 g, after the mass has stabilized. Stabilization may be achieved by storage in a ventilated oven at a constant temperature of 105 °C ± 5 °C. The absolute filter shall be weighed inside the oven. Alternatively, air conditioned according to 5.5 may be drawn through the absolute filter for 15 min then the filter is weighed. Repeat this procedure until the mass has stabilized.

5.5 Temperature and humidity

All tests shall be conducted with air entering the air cleaner at a temperature of 23 °C ± 5 °C. Tests shall be conducted at a relative humidity of (55 ± 15) %, the permissible variation at each weighing stage throughout each single test being ± 2 %.

The test results of an air cleaner will be affected by the relative humidity of the air passing through it and the results of otherwise identical tests carried out near the two extremes of the permitted range of relative humidity may not be directly comparable. The tests should be conducted within the narrowest range of temperature and humidity possible.

6 Test procedure for dry-type air cleaners for automotive applications

6.1 General

Performance tests shall be performed on a complete air cleaner assembly or on a single air cleaner element; tests on a complete air cleaner assembly are preferred. The tests shall consist of an air flow restriction/differential pressure test, an efficiency test and a capacity test. In addition, a pressure collapse test shall be performed on the air filter element.

6.2 Test equipment

6.2.1 Typical arrangements to determine resistance to air flow, dust capacity, dust removal characteristics and rupture collapse characteristics are shown in annex B, Figures B.1 and B.6 to B.11.

Use a dust feeder which when used with the dust injector in Figures B.2 and B.3 is capable of metering dust over the range of delivery rates required. This dust feed system shall not change the primary particle size distribution of the contaminant. The air feed pressure shall be 100 kPa minimum. The ISO heavy-duty injector pressure shall be 280 kPa minimum.

The dust feed system shall be validated as follows.

a) Charge the dust feeder with a pre-weighed amount of test dust.

b) Simultaneously start the dust feed system and timer.

c) At 5-min intervals, determine the mass of dust dispensed. Continue mass determinations of dust increments for 30 min.

d) Adjust the dust feeder until the average delivery rate is within 5 % of the desired rate and the deviation in delivery rate from the average is not more than 5 %.

 © ISO 2000 – All rights reserved

6.2.2 Use a dust-transfer tube between the dust feeder and the injector of a size suitable to maintain dust suspension.

6.2.3 Use the dust injector described in Table 1 and shown in Figures B.2 and B.3.

Table 1 — Recommended ISO dust injectors (see Figures B.2 and B.3)

Dust feed rate g/min	**0 to 26**	**26 to 45**	**> 45**
Injector type	ISO injector	ISO injector or ISO heavy-duty injector	ISO heavy-duty injector

The specified ISO injector has been shown to feed dust satisfactorily at rates up to 45 g/min. Where dust feed rates greater than this are required, more than one injector will have to be used. It should be noted that the design of the system feeding test dust to the injector may affect this maximum rate of dust feed. The maximum attainable dust feed rate should therefore be determined prior to the dust feed/injector system being used for tests.

Injector nozzles are subject to natural erosion. Erosion may affect the distribution and delivery of test contaminant. Therefore, it is recommended to use a design with replaceable parts.

6.2.4 Use an inlet tube conforming to Figure B.4. The dust injector and inlet tube shall be positioned in such a way that there is no loss of dust.

6.2.5 Use a manometer or other differential pressure measuring device with the specified accuracy.

6.2.6 For air cleaner assembly testing, use a housing and set-up agreed upon by the manufacturer and user conforming to Figure B.11. For air filter element testing, use a test set-up and shroud conforming to Figures B.1 and B.5 or an arrangement as shown in Figures B.6 or B.7. Where the test equipment is as shown in Figure B.6, the dust is fed into the chamber and, to ensure that it does not adhere to the walls and is evenly distributed, dry compressed air jets on flexible tubing should be provided in the test chamber, arranged so to agitate any dust that settles out.

When using compressed air for agitating dust, care shall be taken not to eject any dust out of the champer. To ensure that no dust is ejected from the chamber, a negative pressure should be maintained between the chamber and the atmosphere.

6.2.7 Use an outlet tube conforming to Figure B.4. The cross-section shall be the same as the air cleaner outlet. In the case of non-uniform flow conditions caused by special outlet tubes, special precautions may be required.

6.2.8 Use an air flow rate measuring system having the accuracy described in 4.1.

Validate the air flow rate measuring system. The air flow meter shall be of an acceptable design, such as a calibrated orifice and manometer conforming to ISO 5167-1. The orifice unit shall be permanently marked such that it can be identified after calibration. Corrections shall be made for variations in absolute pressure and temperature at the meter inlet and the air flow rate shall be expressed in cubic metres per minute corrected to standard conditions (see 4.2).

6.2.9 Use an air flow rate control system capable of maintaining the indicated flow rate to within 1 % of the selected value during steady-state and variable air flow operation.

6.2.10 Use a blower/exhauster for inducing air flow through the system, which has adequate flow rate and pressure characteristics for the filters to be tested. Pulsation of flow rate shall be so low that it is not measurable by the flow rate measuring system.

© ISO 2000 – All rights reserved

6.2.11 Grounding is required for all test apparatus to reduce the effects of static charges and to improve the consistency of the test results. Grounding of metallic and non-metallic surfaces, housings, dust transport tubes, injectors and associated hardware is recommended.

6.3 Restriction and differential pressure test

6.3.1 The purpose of this test is to determine the restriction/differential pressure/pressure loss across the unit under test which will result when air is passed through under predetermined conditions. Airflow restriction or differential pressure is measured with a clean filter element, or elements, at five equally spaced airflows of between 50 % and 150 % of the rated air flow, or as agreed upon between the user and manufacturer.

6.3.2 Condition the unit at the airflow rate at which the unit is tested for at least 15 min under temperature and humidity conditions as specified in 5.5 until the mass has stabilized.

6.3.3 Set up the test stand as shown in Figures B.8 or B.9 and Figures B.14 or B.15. Seal all joints to prevent air leaks. Connect pressure taps.

6.3.4 Measure and record the restriction and the differential pressure versus the flow rate at approximately 50 %, 75 %, 100 %, 125 % and 150 % of the rated air flow, or as agreed upon between the user and manufacturer.

6.3.5 Record the ambient temperature, pressure and relative humidity.

6.3.6 Correct the recorded restriction and differential pressure to standard conditions in accordance with annex G.

6.3.7 For pressure loss determination, use the formula given in annex A.

6.3.8 Plot the results as shown in annex E or equivalent.

6.4 Efficiency test

6.4.1 Purpose

The purpose of this test is to determine the retention capabilities of the unit under test. This test can be conducted with either constant or variable air flow and with coarse dust or fine test dust. If desired, efficiency tests can be performed concurrently with capacity tests (see 6.5). Determination of the efficiency at constant test air flow can be performed at the rated air flow or any percentage thereof, as agreed upon by the user and manufacturer. Determination of efficiency at variable air flow can be performed using variable air flow cycle according to 6.7.

6.4.2 Types

Three types of efficiency tests can be performed, as follows:

a) full-life efficiency determined when the terminal condition, i.e. the terminating differential pressure, is reached;

b) incremental efficiency determined when, for example, 10 %, 25 % and 50 % of the terminating differential pressure minus the initial differential pressure are reached;

c) initial efficiency determined after the addition of 20 g of contaminant or the number of grams numerically equivalent to 6 times the air flow in cubic metres per minute, whichever is the greater.

6.4.3 Test procedure — Absolute filter method

6.4.3.1 Based on the test flow, calculate the test dust feed rate using a dust concentration of 1,0 g/m^3 of air; in special cases (e.g. small filters) 0,25 g/m^3 or 0,5 g/m^3 may be allowed.

6.4.3.2 Condition the unit under test according to 6.3.2, then measure and record the mass.

© ISO 2000 – All rights reserved

6.4.3.3 Weigh the absolute filter pad as specified in 5.4 and record mass before assembly within absolute filter housing.

6.4.3.4 Set up test stand as shown in Figure B.11 for air cleaner assemblies, or as shown in Figure B.1, B.6 or B.7 for air filter elements. Seal all joints to prevent air leakage.

6.4.3.5 Record the temperature and relative humidity.

6.4.3.6 Prepare the specified test dust according to 5.1 and weigh out the quantity required for test in a suitable test container. For full-life efficiency tests, the quantity should be approximately 125 % of the estimated capacity of the unit under test. Record the mass of the container and dust to the nearest 0,1 g.

6.4.3.7 Start the air flow through the test stand and stabilize at the test flow rate. Record the differential pressure.

6.4.3.8 Load the dust feeder from the dust container and adjust the feed rate to inject dust at the concentration calculated in 6.4.3.1. Reload the dust feeder from the dust container throughout the test as necessary.

6.4.3.9 At specified time intervals (a minimum of five points is recommended), record the differential pressure at the test flow and the elapsed test time.

6.4.3.10 Continue the test until the specified terminal condition is reached.

6.4.3.11 Record the temperature and relative humidity.

6.4.3.12 The dust on the exterior surfaces of a cleaner assembly or any which may have settled in the test chamber/ducting on the inlet side of a test element shall be collected carefully and transferred to the preweighed dust container together with any dust remaining in the dust feeder.

6.4.3.13 Reweigh the dust container and subtract the result from the mass recorded in 6.4.3.6. The difference is the mass of dust fed to the unit under test.

6.4.3.14 Carefully remove the unit under test without losing any dust. Note any evidence of seal leakage or unusual conditions. Weigh the unit, in grams, to within 1 % of the actual value. The increase in mass of the unit under test is this mass minus the mass determined in 6.4.3.2. In the full-life efficiency test [see 6.4.2 a)] this increase in mass is the capacity of the unit under test.

6.4.3.15 Brush any observed dust on the downstream side of the test unit onto the absolute filter. Carefully remove the absolute filter. Repeat step 6.4.3.3 and determine the difference in mass. This is the increase in mass of the absolute filter.

6.4.3.16 Calculate the material balance, B, of the test dust. For the test to be valid, this value shall be within the range 0,98 to 1,02:

$$B = \frac{\Delta m_{\mathrm{F}} + \Delta m_{\mathrm{U}}}{m_{\mathrm{D}}} \qquad (2)$$

where

Δm_{F} is the increase in mass of the absolute filter;

Δm_{U} is the increase in mass of the unit under test;

m_{D} is the total mass of dust fed.

© ISO 2000 – All rights reserved

6.4.3.17 Calculate the efficiency, E, by the following method:

$$E = \frac{\Delta m_{\mathrm{U}}}{\Delta m_{\mathrm{U}} + \Delta m_{\mathrm{F}}} \times 100\ \% \tag{3}$$

where the symbols are as in equation (2).

6.4.4 Test procedure — Direct weighing method

The direct weighing method may be used for cumulative efficiency determination where the humidity can be controlled to within ± 1,0 % and the accuracy of the increase in mass of the filter determined to within 0,1 %.

Where a suitable large, accurate balance is available, it is permissible to use a direct weighing method of assessing the performance of the unit under test. In such cases the air cleaner under test shall be tested according to the procedure in 6.4.3 omitting the operations described in 6.4.3.3, 6.4.3.15, 6.4.3.16 and 6.4.3.17. Calculate the efficiency, E, as follows:

$$E = \frac{\Delta m_{\mathrm{U}}}{m_{\mathrm{D}}} \times 100\ \% \tag{4}$$

where the symbols are as in equation (2).

The test report should indicate the method of efficiency determination used.

6.5 Capacity test

6.5.1 The purpose of this test is to determine the total mass gain of the unit under test at the terminating condition. This test can be conducted with either constant or variable air flow and with coarse or fine test dust contaminant. If desired, the capacity determination can be performed concurrently with the efficiency test (see 6.4).

6.5.2 Condition the unit according to 6.3.2. Perform the test as described in 6.4.3 or 6.4.4.

6.5.3 Assuming a constant ratio of elapsed time versus dust feed of the test unit, record the data and plot the curve of restriction versus mass gain. Refer to 6.4.3.9 for restriction and time interval data. Determine the mass gain values as follows:

$$\Delta m_t = \frac{t_{\mathrm{I}}}{t_{\mathrm{T}}} \times \Delta m_{\mathrm{UT}} \tag{5}$$

where

Δm_t is the increase in mass at end of each time interval;

t_{I} is the total time at end of interval;

t_{T} is the total time at end of test;

Δm_{UT} is the total increase in mass of unit under test at end of test.

6.5.4 In the case of the terminal condition being the restriction, it does not include the restriction added by the dust mixing device and test shroud.

6.6 Filter element pressure collapse test

6.6.1 The purpose of this test is to determine the ability of an air filter element to withstand a specified differential pressure and/or to determine the differential pressure at which collapse occurs.

 © ISO 2000 – All rights reserved

6.6.2 Set up the test stand to perform the basic dust capacity test in accordance with Figure B.1, B.6, B.7 or B.11. Either the element from the prior capacity or efficiency test or a new element can be used for this test.

6.6.3 Increase the air flow through the stand and, if necessary, feed dust at any convenient rate until the specified differential pressure is reached or until element collapse is indicated by a decrease in differential pressure or increase in air flow.

6.6.4 Record the maximum differential pressure attained, the reason for terminating the test, and the condition of the element after test.

6.7 Variable air flow test

6.7.1 As an option to the constant air flow test, a variable air flow test can be carried out by using a variable air flow cycle similar to Figure 1.

6.7.2 In the case of oil bath air cleaners and large air cleaners (e.g. flow rate > 5 m^3/min), the duration of every partial flow section may be 5 min instead of 1 min.

6.7.3 Based on the average test flow for the cycle being used, calculate the dust feed rate as in 6.4.3.1. The dust feed rate should remain constant.

6.7.4 All differential pressure drop determinations shall be made at maximum air flow.

6.7.5 Perform tests using variable air flow in place of the constant air flow, however, with the following changes:

— after the end of each cycle the differential pressure shall be determined at the maximum flow; and

— the efficiency shall be determined at least after three cycles if the duration of partial flow section is 1 min and after every cycle if the duration of partial flow section is 5 min, and after the end of test.

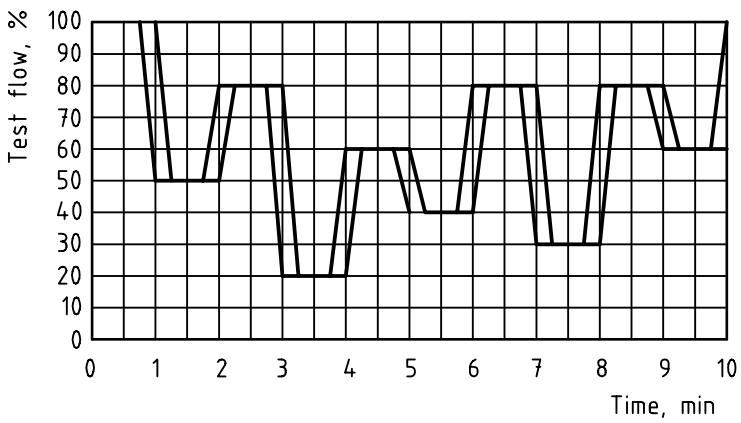

Figure 1 — Typical variable flow cycle (average flow 60 %)

6.8 Presentation of data

For presentation of data, use annexes C, E and F or equivalent.

© ISO 2000 – All rights reserved

7 Test procedure for dry-type air cleaners for industrial applications

7.1 General

Performance tests shall be performed on a complete air cleaner including precleaner, primary element, and secondary element, if normally provided. The tests shall consist of an airflow restriction/differential pressure test, an initial efficiency test, and a combined efficiency and dust capacity test.

It is difficult, if not impossible, to select a test dust size distribution and concentration which will be representative of all service conditions. Therefore, based on primarily practical considerations, the different types of air cleaners have been classified as to their most probable service conditions, and the test dust grade and concentration selected accordingly from Table 2.

Table 2 — Test dust and concentration

Air cleaner type	Test dust [a]	Concentration
Single stage	Coarse or fine	1 g/m ^{3}
Multistage	Coarse or fine	2 g/m ^{3}
[a] In accordance with ISO 12103-1. See 5.11.		

7.2 Test equipment

7.2.1 Typical test arrangements are shown in Figures B.12, B.14 and B.15.

7.2.2 The dust feeding system shall be the same as described in 6.2.1.

7.2.3 The dust transfer tube shall be the same as described in 6.2.2. Concerning the dust feed rate, see also Table 1.

7.2.4 Tubular air cleaner inlet: the cross-sectional area of the upstream piezometer tube shall be the same as the air cleaner inlet (see Figure B.4).

7.2.5 Rectangular or open face inlet: the same as 7.2.4 except the overall length and placement of the piezometer shall be 24 and 16 times the hydraulic radius respectively (hydraulic radius = area divided through perimeter).

7.2.6 The peripheral air inlet or stack type precleaners shall be tested in a chamber which ensures the even distribution and delivery of test dust to the inlet of the unit. Care should be taken in the design of the chamber to ensure that all the test dust is fed to the filter. If dust settling occurs, then compressed air jets may be used to re-entrain the test dust. Typical examples of chambers are shown in Figure B.13.

When using compressed air for agitating dust, care should be taken not to eject dust out of the chamber. To ensure that no dust is ejected, a negative pressure should be maintained between the chamber interior and the atmosphere.

7.2.7 The outlet downstream piezometer tube shall be as shown in Figure B.4. The inside diameter of the outlet downstream piezometer tube shall be the same as the air cleaner outlet tube. In the case of non-uniform flow conditions caused by special outlet tubes, special precautions may be required.

7.2.8 The absolute filter shall comprise the material specified in 5.3.

7.2.9 Use an air flow measuring system as described in 6.2.8, an air flow control system as described in 6.2.9 and a blower/exhauster as described in 6.2.10.

© ISO 2000 – All rights reserved

7.2.10 Grounding is required of all test apparatus to reduce the effects of static charges and to improve consistency of test results. Grounding of metallic and non-metallic surfaces, housings, dust transport tubes, injectors and associated hardware is recommended.

7.3 Restriction and differential pressure test

Test shall be performed according to 6.3.

7.4 Initial efficiency test procedure — Absolute filter method

7.4.1 Condition the unit to the air flow at which the unit is tested for at least 15 min under the temperature and humidity conditions specified in 5.5.

If desired, conditioning of the absolute filter pad and air cleaner can be performed concurrently.

7.4.2 Weigh the absolute filter pad as specified in 5.4 and record the mass before assembly in the absolute filter housing.

7.4.3 Prepare the test dust according to 5.1.1 and weigh out a quantity equal to 11 g/m^2 of the primary element media area. Place the preweighed dust in the dust feeder.

7.4.4 If it is practicable, weigh the complete unit under test.

7.4.5 Weigh the dust feed system with the dust and record the mass.

7.4.6 Set up the air cleaner as shown in Figure B.12 or B.13, sealing all connections to prevent air leakage, and maintain the air flow at the test flow rate.

7.4.7 Start the dust feeder and adjust the feed rate to maintain continuous injection of the complete quantity of test dust over a period of 30 min.

7.4.8 Record the temperature and relative humidity.

7.4.9 Brush any observed dust on the downstream side of the test unit onto the absolute filter. Carefully remove and reweigh the absolute filter pad as in 5.4. Calculate the increase in mass by comparison with the mass recorded in 7.4.2.

7.4.10 Collect all dust which has settled on the exterior surface, inlet ducting or test chamber, or the inlet side of the test unit and transfer this dust to the dust feed system.

7.4.11 Reweigh the dust feed system to within 1 % of the actual value, and calculate the mass of dust injected into the test cleaner by comparison with the initial mass of the dust feed system from 7.4.5.

7.4.12 If it is practicable, reweigh the complete unit under test.

7.4.13 Calculate the initial efficiency, E_{i}, as follows:

$$E_{\mathrm{i}} = \frac{m_{\mathrm{D}} - \Delta m_{\mathrm{F}}}{m_{\mathrm{D}}} \times 100\,\% \qquad (6)$$

where the symbols are as in equation (2).

7.4.14 If it was practicable to weigh and reweigh the complete unit under test, the efficiency may be calculated from equation (3) in 6.4.3.17. Validation of the test shall be carried out according to 6.4.3.16.

© ISO 2000 – All rights reserved

7.5 Full-life efficiency and capacity test

7.5.1 Air cleaner dust capacity

Air cleaner dust capacity is a function of air cleaner size, airflow test, terminal condition and grade of test dust employed. To permit a comparison between different air cleaners, the dust capacity is, therefore, determined at test air flow to the specified terminal condition with four intermediate points. In the absence of such a specification, a restriction of 6 kPa (60 mbar) should be used as the terminal condition.

In the case of the terminating condition being the restriction, it does not include the restriction added by the dust mixing duct and test shroud. The test can be conducted with either constant or variable air flow according to 6.7.

7.5.2 Test procedure — Absolute filter method

7.5.2.1 Condition the unit to the air flow at which the unit is tested for at least 15 min under temperature and humidity conditions as specified in 5.5. If desired, conditioning of the absolute filter pad and air cleaner can be performed concurrently.

7.5.2.2 Weigh the absolute filter pad as specified in 5.4 and record the mass before mounting it within the absolute filter housing.

7.5.2.3 Prepare a sufficient quantity of test dust according to 5.1 of the selected grade and store in a suitable container in the test area to stabilize to constant mass. The amount of dust, calculated according to the relevant concentration specified should be more than sufficient to cover the expected duration of the test. Record the mass.

7.5.2.4 If it is practicable, weigh the complete unit under test and record the mass.

7.5.2.5 Set up air cleaner as shown in Figure B.12, sealing all connections to prevent air leakage, and maintain the air flow at the test flow rate.

7.5.2.6 Load the dust feeder from the dust container and adjust the feed rate to coincide within the concentration specified in Table 2. Reload the dust feeder from the dust container as necessary throughout the test.

7.5.2.7 Record the temperature and relative humidity.

7.5.2.8 Record at least four intermediate values of the mass of dust fed to the test unit (feed rate × time) and the corresponding restriction/differential pressure at approximately uniform time intervals.

7.5.2.9 Correct the restriction/differential pressure/pressure loss values to standard conditions according to annex G and plot them against dust fed to the air cleaner, as shown in annex E. Label the ordinate "restriction" or "differential pressure" or "pressure loss" as appropriate.

7.5.2.10 Continue the test until the specified terminal condition is attained. In the case of air cleaners having no limiting dust capacity, e.g. cyclone air cleaners, the test shall not be stopped before the cleaner has been fed with a sufficient quantity of dust for its efficiency to be determined as accurately as required. The minimum quantity shall be 50 g of dust.

7.5.2.11 Brush any observed dust on the downstream side of the test unit onto the absolute filter. Carefully remove and reweigh the absolute filter pad and determine the increase in mass by comparison with the mass recorded in 7.5.2.2.

7.5.2.12 Collect all dust which has settled on exterior surfaces/ducting/test chamber or the inlet side of the test unit and transfer this dust to the original dust container. Transfer all unused dust in the dust feed device to the original dust container and reweigh the container and dust. By subtraction of this mass from the mass recorded in 7.5.2.3, determine the total mass of dust injected into the test unit.

7.5.2.13 If it is practicable, reweigh the complete unit under test.

© ISO 2000 – All rights reserved

7.5.2.14 Calculate the capacity, C, of the unit under test as follows:

$$C = m_D - \Delta m_F \tag{7}$$

where

m_D is the mass of dust fed;

Δm_F is the increase in mass of the absolute filter.

7.5.2.15 Calculate the full-life efficiency, E_f, as follows:

$$E_f = \frac{m_D - \Delta m_F}{m_D} \times 100\ \% \tag{8}$$

where the symbols are as in equation (7).

7.5.2.16 If it was practicable to weigh and reweigh the complete unit under test, the efficiency may be calculated using equation (3) in 6.4.3.17. Validation of the test shall be carried out according to 6.4.3.16.

7.5.3 Test procedure — Direct weighing method

The direct weighing method may be used for cumulative efficiency determination where the humidity can be controlled to within ± 1,0 % and the accuracy of the mass increase of the filter determined within 0,1 %.

Where a suitably large, accurate balance is available, it is permissible to use a direct weighing method of assessing capacity and accumulative efficiency. In such cases the air cleaner under test shall be tested according to the procedure detailed in 7.5.2 with the following changes.

a) Weigh the air cleaner under test before and after the test and record the increase in mass of the test unit. This mass is the capacity of the unit under test.

b) Disregard operations 7.5.2.2; 7.5.2.11; 7.5.2.14 and 7.5.2.15.

c) Calculate the full-life efficiency, E_f, as follows:

$$E_f = \frac{\Delta m_U}{m_D} \times 100\ \% \tag{9}$$

where

Δm_U is the increase in mass of the unit under test;

m_D is the total mass of dust fed.

The test report should indicate the method of efficiency determination used.

7.6 Presentation of data

Data should be presented as given in annexes D, E and F or equivalents.

© ISO 2000 – All rights reserved

7.7 Scavenged air cleaner performance test

7.7.1 General

This subclause describes those variations in the test procedures specified in this International Standard that are necessary for the testing of air cleaners that are scavenged in operation by a proportion of the air input that is bled off for this purpose.

The flow equation is as follows:

$$q_{V\mathrm{A}} = q_{V\mathrm{B}} - q_{V\mathrm{C}} \tag{10}$$

where

$q_{V\mathrm{A}}$ is the inlet air flow rate;

$q_{V\mathrm{B}}$ is the cleaned air flow rate;

$q_{V\mathrm{C}}$ is the scavenged air flow rate.

7.7.2 Additional equipment

A typical test arrangement is shown in Figure B.16 and shall comprise the following.

a) Exhauster: an exhauster shall be provided to handle the scavenged flow and shall be capable of maintaining it at a steady state during the whole test.

b) Air flow meter: an air flow meter shall be provided to measure the scavenged air flow rate having an accuracy in accordance with 4.1.

c) Pressure tappings: the pressure tappings used shall conform to Figure B.4.

d) Scavenged air filter: a filter shall be provided in the scavenged air flow of sufficient efficiency and capacity to protect the apparatus downstream of it against the effects of the dust in the scavenged air flow.

7.7.3 Restriction and differential pressure test

The test shall be conducted in accordance with 6.3 with the following changes.

a) The scavenged air flow shall be started before the cleaned air flow.

b) The scavenged air flow shall preferably be stopped at the same time as the cleaned air flow; it shall not be stopped before the cleaned air flow.

c) Measurements shall be made with the scavenged air flow adjusted to be a specified proportion of the cleaned air flow (interaction between the scavenged air flow and the cleaned air flow may require some re-adjustment to be made to maintain this proportion).

7.7.4 Full-life efficiency and capacity test

7.7.4.1 Most of the air cleaners that are scavenged in operation by a proportion of the air input that is bled off for this purpose are comparatively large in size. The absolute filter test method is therefore recommended.

7.7.4.2 Unless otherwise specified, the scavenged air flow shall be maintained at a fixed proportion of the cleaned air flow, as agreed between the manufacturer and user.

© ISO 2000 – All rights reserved

7.7.4.3 The test dust concentration shall be that in the inlet air flow.

7.7.4.4 The scavenged air flow shall be started before the cleaned air flow.

7.7.4.5 The scavenged air flow should preferably be stopped at the same time as the cleaned air flow. It shall not be stopped before the cleaned air flow.

7.7.4.6 The full-life efficiency, E_f, of the air cleaner shall be calculated as follows:

$$E_f = \frac{d_1 - d_2}{d_1} \times 100\,\% \tag{11}$$

where

d_1 is the average dust concentration at the inlet of the air cleaner = m_1/V_1

d_2 is the average dust concentration at the outlet of the air cleaner = m_2/V_2

in which

m_1 is the mass of dust fed to the air cleaner;

m_2 is the mass of dust leaving the clean side of the air cleaner;

V_1 is the volume of air fed to the air cleaner;

V_2 is the volume of air leaving the clean side of the air cleaner.

7.7.4.7 The capacity, C, of the unit shall be calculated in accordance with equation (12) as follows:

$$C = \left(m_D \times \frac{q_{VB}}{q_{VA}} \right) - \Delta m_F \tag{12}$$

where

q_{VA} is the inlet air flow rate;

q_{VB} is the cleaned air flow rate;

m_D is the total mass of dust fed;

Δm_F is the increase in mass of the absolute filter.

7.7.5 Presentation of data

Data should be presented as given in annexes D, E and F or equivalents.

7.8 Precleaner performance test

7.8.1 Precleaner dust removal

When testing with precleaners that employ either an automatic dust unloading valve or a dust cup, the following provisions with respect to dust removal shall be made. For precleaners that are scavenged, see 7.7.

a) Automatic unloader valve: for test purposes, a sealed jar or container may be substituted for the unloader valve.

© ISO 2000 – All rights reserved

b) Dust cup: the dust shall not be emptied during the dust capacity test until at least two-thirds full. Also, the number of servicing intervals shall be noted in the performance report.

The user should be aware that the above provisions ensure optimum air cleaner performance and it is advisable to consult the air cleaner manufacturer for specific instructions or test procedures for any given air cleaner installation.

7.8.2 Precleaner efficiency

The precleaner efficiency shall be determined during the dust capacity test, based on the total mass of dust fed to the air cleaner and either the sum of the gain in mass of the primary and secondary elements and the absolute filter, or the mass of dust removed by the precleaner.

7.8.3 Presentation of data

Data should be presented as given in annexes D, E and F or equivalents.

7.9 Secondary element test procedure

7.9.1 General

The requirement for a secondary element is that it should block rapidly in the event of a leak occurring in the primary element, passing a minimum of dust in the process. To evaluate this, a specific efficiency test shall be performed. During normal and correct operation of the air cleaning system, it is desirable that the secondary element should not block during the lives of one or more primary elements. To evaluate this, a secondary element blocking test shall be performed. This may be carried out as part of the full-life efficiency and capacity test as specified in 7.5.

7.9.2 Specific efficiency test

7.9.2.1 Preparation

Using the housing normally employed to retain the secondary elements, prepare a "dummy" primary element, i.e. a complete element skeleton lacking only the media but including any swirl vane present. Place the secondary element and the dummy primary element into the housing.

7.9.2.2 Test procedure

7.9.2.2.1 The test shall be conducted in accordance with the full-life efficiency and capacity test given in 7.5, but with the following specifications.

7.9.2.2.2 The terminating conditions for dust feeding shall be a differential pressure across the housing of 10 kPa (100 mbar) or as agreed upon between the user and manufacturer.

7.9.2.2.3 The dust used shall be ISO Fine when a pre-cleaner is not provided. ISO Coarse shall be used where a pre-cleaner is used.

7.9.2.2.4 The airflow shall be the full rated airflow as agreed between the customer and supplier.

7.9.2.2.5 The test dust concentration shall be 0,1 g/m^3.

7.9.2.2.6 Where applicable, the requirements of 7.8.1 and 7.8.1 a) (pre-cleaner dust removal) shall be adhered to. The precleaning efficiency will be different from normal during this test. However, should a large reduction be noted, the reasons for this should be checked and any observations recorded.

7.9.2.2.7 At the end of the test, after measuring the efficiency, the flow rate shall be increased to produce a differential pressure across the housing of 12,5 kPa (125 mbar). The secondary element shall not rupture under these conditions.

 © ISO 2000 – All rights reserved

7.9.3 Expression of results

Calculate the efficiency as in 7.5.2.15 or 7.5.3 c).

7.9.4 Secondary element blocking test

7.9.4.1 General

The test determines the increase in restriction/differential pressure and mass of a secondary element, caused by the dust that has passed through the primary element.

7.9.4.2 Preparation

Use a clean primary element and secondary element in the housing normally employed. Determine the mass of the secondary element after conditioning in accordance with 7.5.2.1.

7.9.4.3 Test procedure

7.9.4.3.1 Set up the air cleaner as in 6.3 (restriction and differential pressure test). Measure and record the restriction/differential pressure of the unit at the rated flow only. Replace the later reference primary element by a new primary element.

7.9.4.3.2 Conduct a full life efficiency and capacity test as specified in 7.5.

7.9.4.3.3 Replace the primary element with the reference one used at the start of the test. Repeat the restriction and differential pressure test of 7.9.4.3.1. Note the result.

7.9.4.3.4 Remove the secondary element and reweigh.

7.9.4.3.5 Repeat tests with more primary elements, using the same secondary element until a specified weight increase of differential pressure increase of the secondary element has occurred. These values should be agreed between user and manufacturer.

Replace the last primary element by the reference element and note the differential pressure and reweigh the secondary element. The performance of the secondary element depends on the efficiency of the primary element.

7.9.4.4 Expression of results

Calculate the increase in restriction/differential pressure of the unit from 7.9.4.3.3 and 7.9.4.3.1 and the increase in mass of the secondary element.

8 Test procedure for industrial applications of oil bath air cleaners

8.1 General

Performance tests shall be performed on a complete oil bath air cleaner. The tests shall consist of a restriction/differential pressure test, an oil carry-over test, a combined capacity and efficiency test, and a recovery test.

8.2 Test equipment and conditions

8.2.1 Test the oil in accordance with 5.2.

8.2.2 Test dusts prepared according to 5.1.2 shall be used at a concentration of 1 g/m^3 air flow. Either fine or coarse test dust may be specified.

© ISO 2000 – All rights reserved

8.2.3 All tests shall be carried out with the air cleaner at a level position unless otherwise specified by the user or by the particular clause of the test procedure. Before the test, the air cleaner shall be prepared in the following manner:

a) thoroughly wash and dry the air cleaner;

b) fill the oil cup/reservoir to the indicated level with the specified oil;

c) allow air to flow through the cleaner at the rated air flow for 15 min;

d) stop the air flow or allow a draining period of 15 min;

e) refill the cup/reservoir with oil to the specified level for the particular test.

8.2.4 A typical arrangement for testing oil bath air cleaners of the tubular inlet type is shown in Figure B.12.

8.2.5 Air cleaners of the peripheral inlet type shall be tested in a chamber which ensures the even distribution and delivery of test dust to the inlet of the unit. Care should be taken in the design of the chamber to ensure that all the test dust is fed to the filter. If dust setting occurs, then a compressed air jet may be used to re-entrain the test dust. Typical examples of chambers are shown in Figure B.13.

When using compressed air for agitating dust, care should be taken not to eject dust out of the chamber. To ensure that no dust is ejected, a negative pressure should be maintained between the chamber interior and the atmosphere.

8.2.6 All tests shall be carried out under the conditions detailed in 5.5.

Grounding is required for all test apparatus to reduce the effects of static charges and to improve the consistency of the test results. Grounding of metallic and non-metallic surfaces, housings, dust transport tubes, injectors and associated hardware is recommended.

8.3 Restriction and differential pressure test

Tests shall be performed according to 6.3 with the following changes:

a) perform the restriction/differential pressure test versus flow rate at more than 100 % only as long as no oil carry-over occurs;

b) the air flow shall be maintained until the differential pressure across the air cleaner has stabilized.

8.4 Oil carry-over test

8.4.1 Dust shall not be fed to the cleaner during this test.

8.4.2 The cleaner, prepared in accordance with 8.2.3, shall be assembled, weighed and attached to the test rig. The room temperature and humidity shall be recorded. The recommended oil shall be used for the test and the test shall be conducted at a temperature to be agreed between the user and manufacturer.

8.4.3 Each oil bath air cleaner tested in accordance with this clause shall be tested in one of two ways, as agreed between the manufacturer and the purchaser. The two ways are as follows:

a) a test at a single flow rate, above the rated flow, as agreed between the manufacturer and purchaser, to determine whether or not oil carry-over occurs at that flow rate;

b) a test at increasing flow rates, starting at 80 % of the rated flow and increasing in increments of 10 % of the rated flow, to determine the air flow rate at which oil carry-over occurs.

© ISO 2000 – All rights reserved

8.4.4 The test in 8.4.3 a) shall be conducted for a minimum of 60 min for each filter tested. The test in 8.4.3 b) shall be conducted for at least 10 min at each flow rate.

8.4.5 At the end of the test at each flow rate, the air cleaner outlet shall be examined for signs of oil carry-over using an observation chamber with a target plate covered with a suitable paper which turns transparent at the impact of oil droplets (see annex B, Figure B.17).

8.4.6 At the end of the test described in 8.4.3, the air cleaner shall be removed and weighed again and the loss of oil by mass shall be recorded.

8.4.7 If an oil bath air cleaner is to be or may be operated in an inclined position, the tests described in 8.4.3 shall be repeated in full with the cleaner inclined at the angles and directions in which it may be required to operate, with such additional margins as may be agreed between the manufacturer and purchaser.

8.5 Full life efficiency and capacity test

The dust capacity/efficiency characteristics of oil bath air cleaners shall be assessed by the methods described in 7.5 for industrial air cleaners with the exceptions detailed below. It is essential, when testing oil bath cleaners, to ensure that no oil carry-over occurs at the rated test air flow. Significant oil losses of this kind will affect the masses recorded for the absolute filter and/or unit under test, which will influence the final test results. The tests may be conducted with either constant or variable air flow according to 6.7. The exceptions in test procedures are the following.

a) Condition the unit under test according to 8.2.3. Measure and record the mass.

b) Use the test dust at the concentration detailed in 8.2.2.

c) At the end, perform an oil carry-over test according to 8.4.3 b).

8.6 Recovery test

After the capacity test, drain and clean the unit under test to the precise instructions recommended by the cleaner manufacturer and resume the test without dust feed for 20 min, noting the restriction/differential pressure at 5 min intervals during this period. The recovery capabilities of the test unit will be assessed by comparison of these results with those obtained for a new, unused test cleaner.

8.7 Presentation of data

Data should be presented as given in annexes D, E and F or equivalents.

© ISO 2000 – All rights reserved

Annex A
(normative)

Explanation of restriction, differential pressure and pressure loss of an air cleaner

When differential pressure across an air cleaner has been measured ($p_2 - p_1$ in Table A.1), any difference in the cross-sectional area of the ducts at the upstream and downstream pressure tapping points shall be taken into account in determining the pressure loss across the air cleaner. The pressure loss across the cleaner is given by the equation:

$$\Delta p_{\mathrm{l}} = \Delta p_{\mathrm{d}} - \Delta p_{\mathrm{c}}$$

where Δp_{d} is the measured differential pressure;

$$\Delta p_{\mathrm{c}} = \frac{\rho \cdot v_2^2}{2} - \frac{\rho \cdot v_1^2}{2}$$

where

ρ is the density of the air;

v_1 the velocity of the air in the duct at the upstream pressure tapping point;

v_2 is the velocity of the air in the duct at the downstream pressure tapping point.

When the upstream pressure is equal to atmospheric and therefore only the static pressure in the downstream duct has been measured, the pressure loss across the air cleaner can be calculated from the dynamic head, p_{dyn}, required to accelerate the air from rest to its velocity in the downstream duct. The pressure loss Δp_{l} across the cleaner is then given by the equation:

$$\Delta p_{\mathrm{l}} = \Delta p_{\mathrm{r}} \cdot p_{\mathrm{dyn}}$$

$$= p_2 - \frac{\rho \cdot v_2^2}{2}$$

where $\Delta p_{\mathrm{r}} = p_2$ is the restriction/static pressure at the downstream pressure tapping point.

© ISO 2000 – All rights reserved

Table A.1 — Illustration of restriction, differential pressure and pressure loss of an air cleaner

Term	Air cleaner drawing air from the atmosphere	Air cleaner drawing air through an inlet duct	Explanation
Static pressure upstream of air cleaner	—	p_1	Used to measure restriction of inlet tube.
Static pressure downstream air cleaner = restriction	$\Delta p_r = p_2$	$\Delta p_r = p_2$	Used when no inlet tube. See Figures B.8, B.9 and B.15.
Differential pressure	—	$\Delta p_d = \Delta p_r - p_1$ $= p_2 - p_1$	Used with normally equal diameter piezometers. See Figure B.14.
Pressure loss	$\Delta p_l = \Delta p_r - p_{dyn}$ $= p_2 - \frac{\rho \cdot v_2^2}{2}$	$\Delta p_l = \Delta p_d - \Delta p_c$ $= (p_2 - p_1) - \frac{(\rho \cdot v_2^2) - (\rho \cdot v_1^2)}{2}$	Used when inlet and outlet piezometers have different diameters.

© ISO 2000 – All rights reserved

Annex B
(normative)

Test equipment

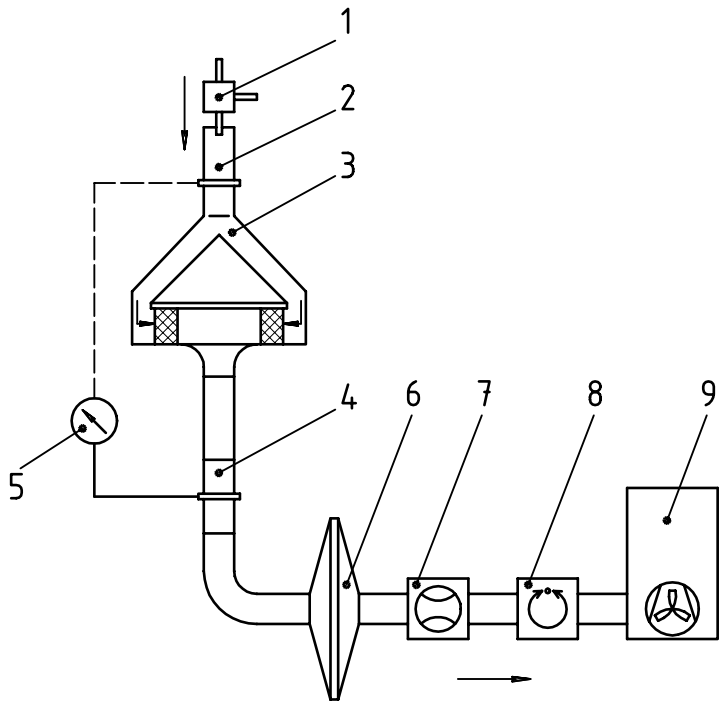

Key

1 Dust injector (see Figures B.2 and B.3)

2 Inlet tube (see Figure B.4)

3 Test shroud (see Figure B.5)

4 Outlet tube (see Figure B.4)

5 Pressure measuring device

6 Absolute filter

7 Air flow meter

8 Air flow control

9 Exhauster

Figure B.1 — Filter element efficiency/capacity test set-up

© ISO 2000 – All rights reserved

Dimensions in millimetres

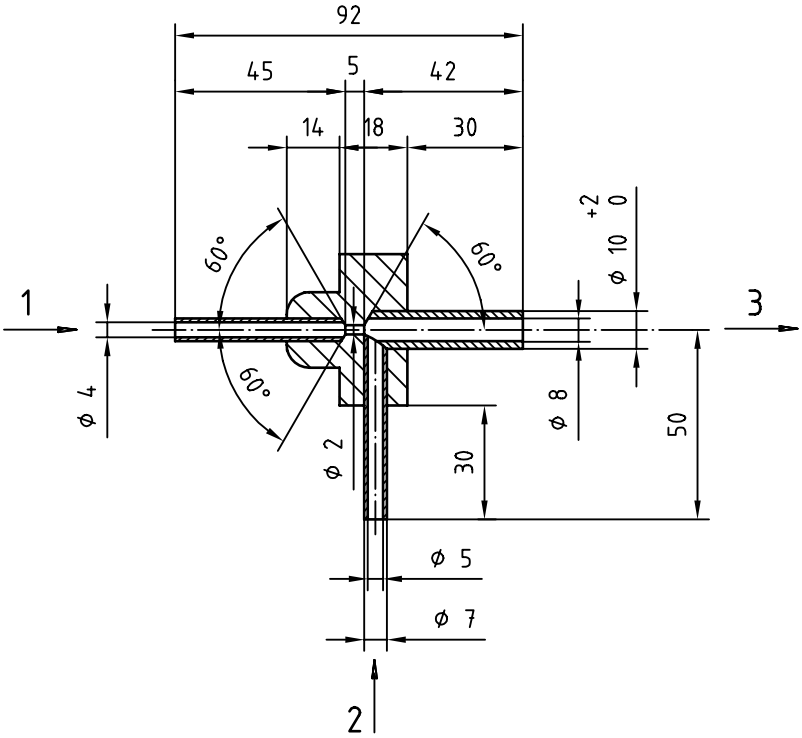

Key

1 Air entry

2 Dust entry

3 Dust/air exit

Figure B.2 — ISO dust injector

© ISO 2000 – All rights reserved

Dimensions in millimetres

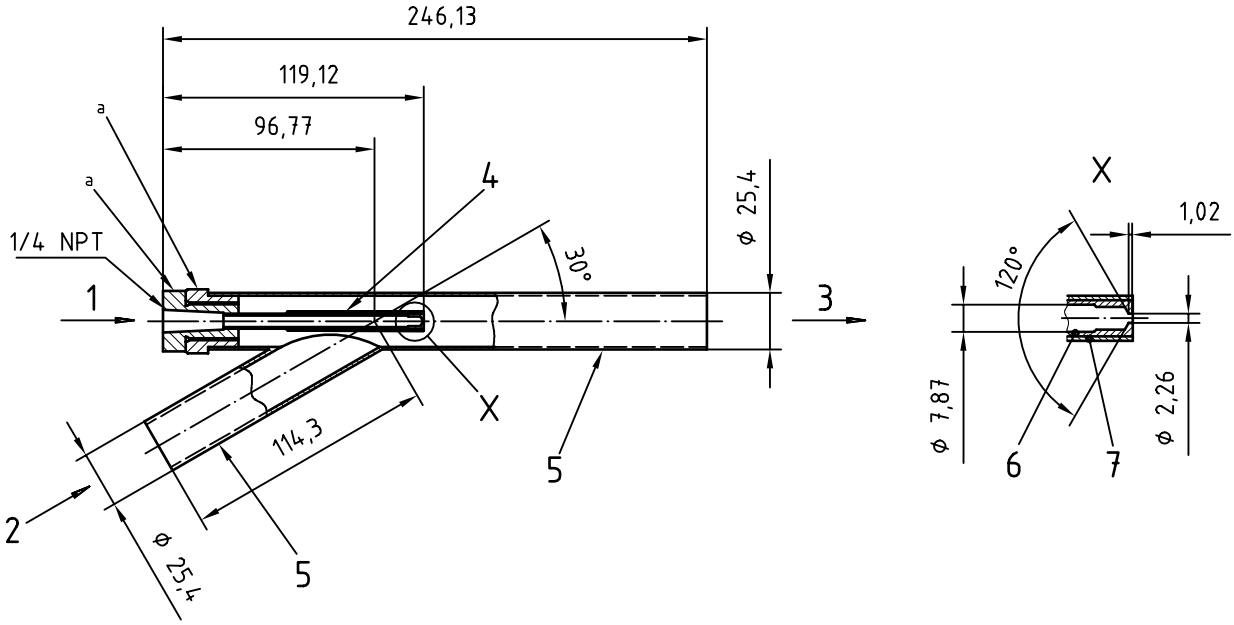

Key

1 Air entry

2 Dust entry

3 Dust/air exit

4 Vinyl tubing erosion shield

5 Stainless-steel tubing of wall thickness 1,65 mm

6 Stainless-steel tubing of wall thickness 0,81 mm

7 Vinyl tubing of diameter 9,53 mm

NOTE See Table 1.

[a] Make from 3/4 - 16 hexagonal HD bolt.

Figure B.3 — ISO heavy-duty dust injector

Dimensions in millimetres

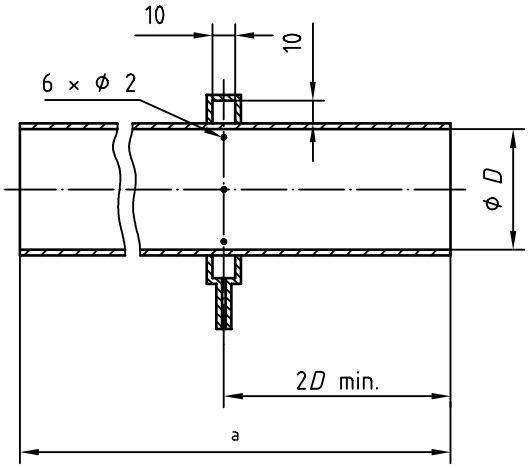

[a] Outlet tube: 4*D* min; inlet tube: 6*D* min.

Figure B.4 — Inlet/outlet piezometer tube

© ISO 2000 – All rights reserved

Key

1 Diffusor cone

2 Sealing plate

3 Unit under test

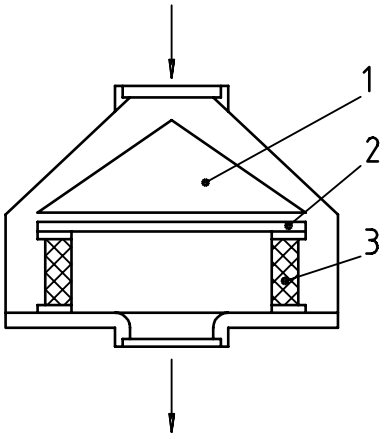

Figure B.5 — Filter element test shroud

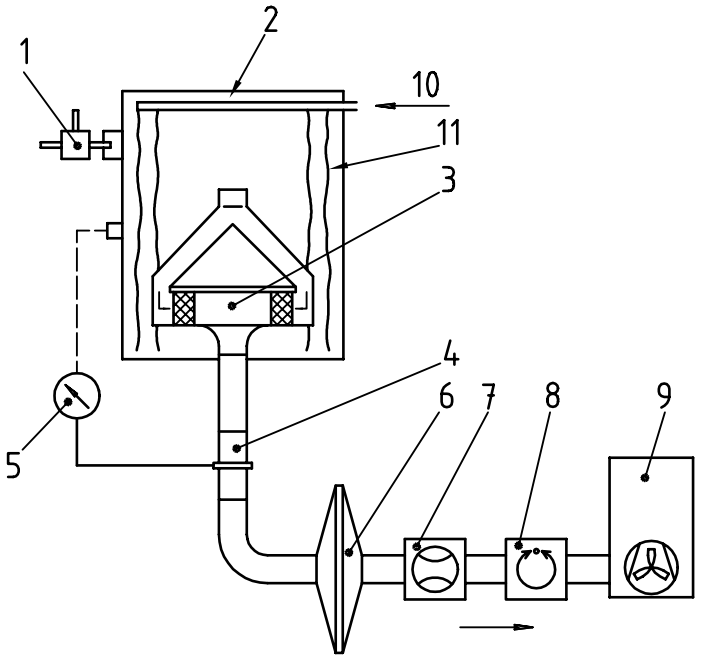

Key

1 Dust injector (see Figures B.2 and B.3)

2 Dust chamber

3 Unit under test with diffusor cone (see Figure B.5)

4 Outlet tube (see Figure B.4)

5 Pressure measuring device

6 Absolute filter

7 Air flow meter

8 Air flow control

9 Exhauster

10 Compressed air feed

11 Compressed air feed flexible tubes

NOTE In this figure a single air cleaner element is installed.

Figure B.6 — Efficiency/capacity test set-up using a dust chamber

© ISO 2000 – All rights reserved

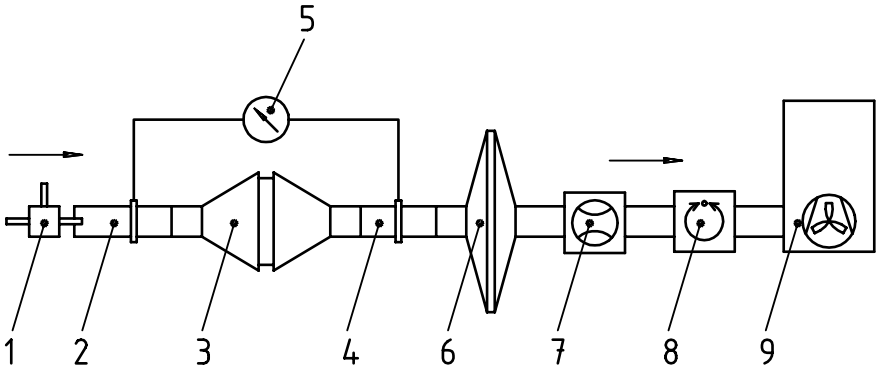

Key

1 Dust injector (see Figures B.2 and B.3)

2 Inlet tube (see Figure B.4)

3 Panel filter chamber

4 Outlet tube (see Figure B.4)

5 Pressure measuring device

6 Absolute filter

7 Air flow meter

8 Air flow control

9 Exhauster

Figure B.7 — Set-up for panel filter element efficiency/capacity test

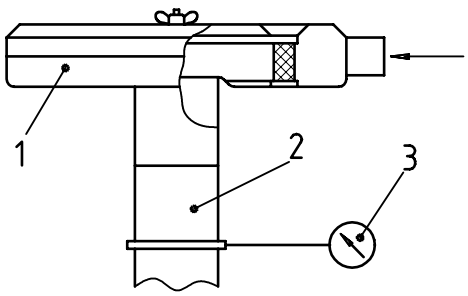

Key

1 Unit under test

2 Outlet tube (see Figure B.4)

3 Restriction measuring device

Figure B.8 — Set-up for restriction test

© ISO 2000 – All rights reserved

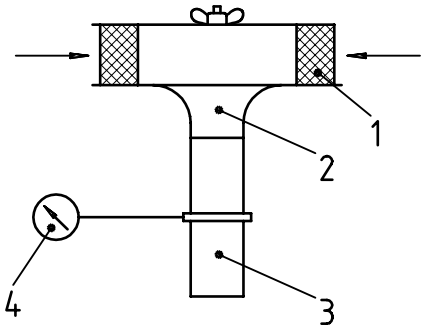

Key

1 Unit under test

2 Orifice (see Figure B.10)

3 Outlet tube (see Figure B.4)

4 Restriction measuring device

Figure B.9 — Set-up for filter element restriction test

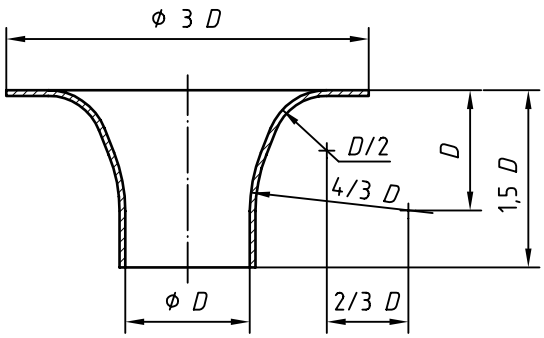

$\varnothing D = \varnothing D$ in Figure B.4

Figure B.10 — Ideal flow orifice

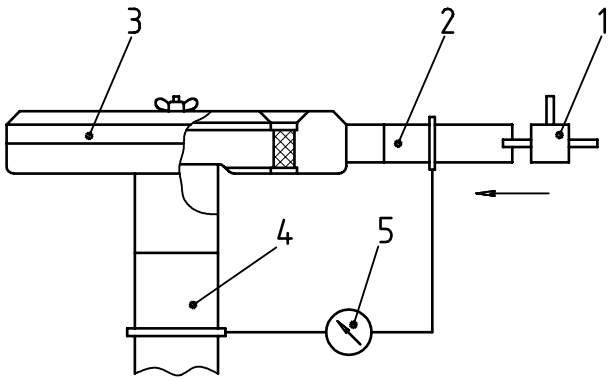

Key

1 Dust injector (see Figures B.2 and B.3)

2 Inlet tube (see Figure B.4)

3 Unit under test

4 Outlet tube (see Figure B.4)

5 Pressure measuring device

Figure B.11 — Set-up for efficiency/capacity test

© ISO 2000 – All rights reserved

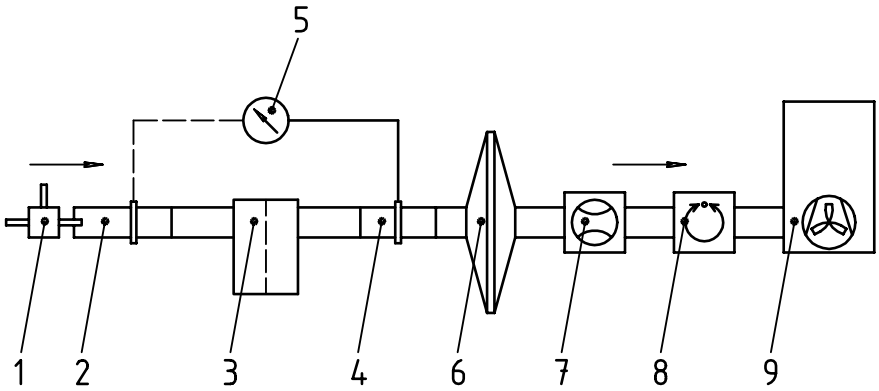

Key

1 Dust injector (see Figures B.2 and B.3)

2 Inlet tube (see Figure B.4)

3 Unit under test

4 Outlet tube (see Figure B.4)

5 Pressure measuring device

6 Absolute filter

7 Air flow meter

8 Air flow control

9 Exhauster

Figure B.12 — Set-up for tubular air cleaner efficiency/capacity test

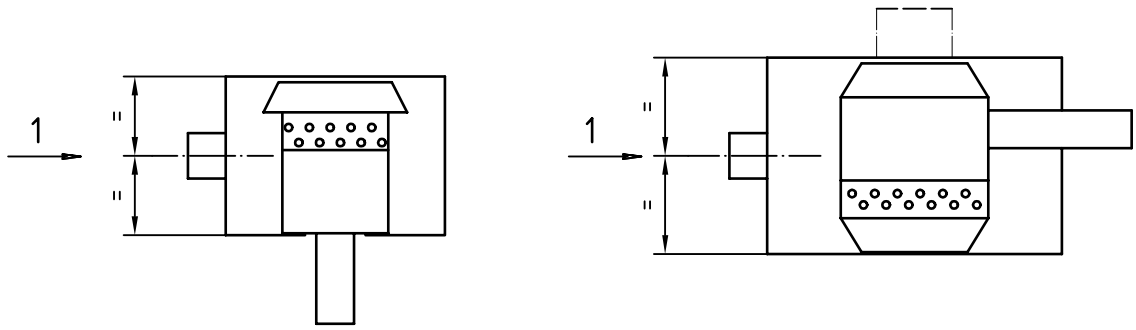

Key

1 Dust/air entry

Figure B.13 — Arrangement for non-tubular inlet air cleaner test chamber

© ISO 2000 – All rights reserved

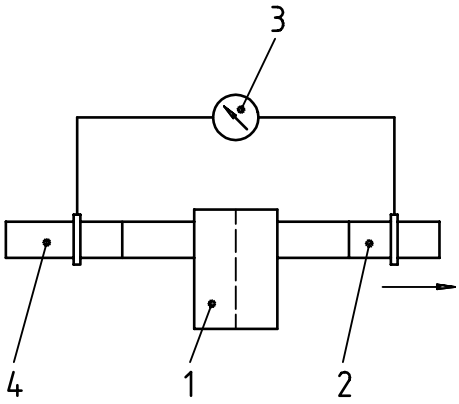

Key

1 Unit under test

2 Outlet tube (see Figure B.4)

3 Differential pressure measuring device

4 Inlet tube (see Figure B.4)

Figure B.14 —Set-up for differential pressure test

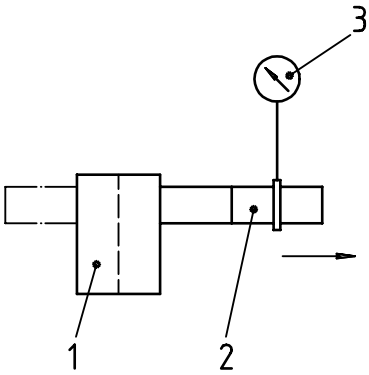

Key

1 Unit under test

2 Outlet tube (see Figure B.4)

3 Restriction measuring device

Figure B.15 —Set-up for restriction test

© ISO 2000 – All rights reserved

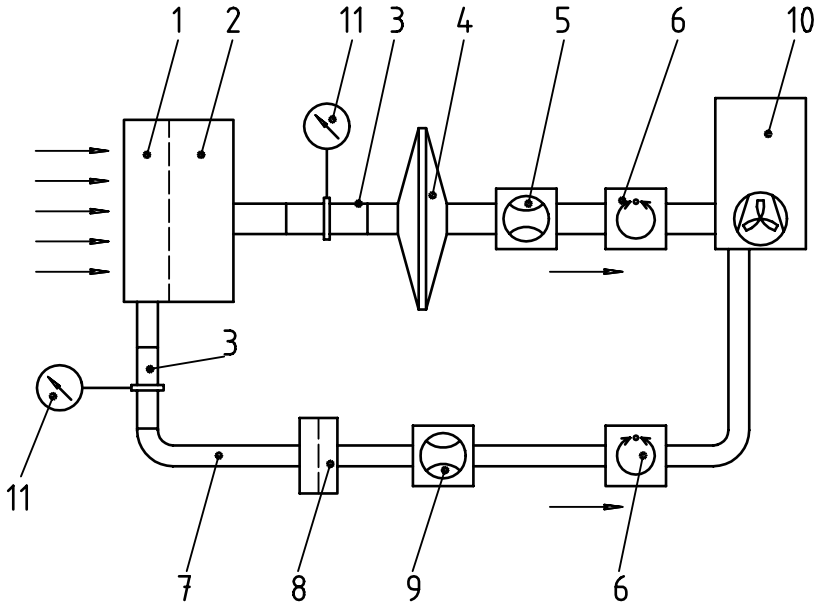

Key

1 + 2	Unit under test	7	Scavenge air duct
1	Precleaner, scavenged	8	Scavenge air duct filter
2	Main cleaner	9	Scavenge air duct flow meter
3	Outlet tube (see Figure B.4)	10	Exhauster
4	Absolute filter	11	Restriction measuring device
5	Air flow meter		
6	Air flow control		

Figure B.16 — Set-up for scavenged air cleaner efficiency/capacity test

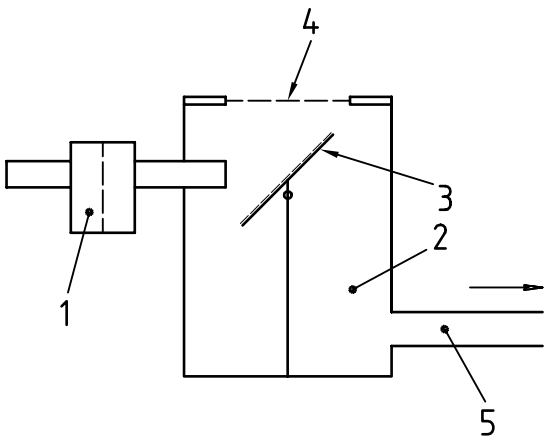

Key

1 Unit under test

2 Observation chamber

3 Target plate covered with paper

4 Observation window

5 Outlet to air exhauster

Figure B.17 — Oil carry-over test — Observation chamber

© ISO 2000 – All rights reserved

Annex C
(informative)

Report sheet on performance testing of air cleaner equipment according to ISO 5011 — Automotive application

1 Test unit:.....Model/Type No.: .....

Manufacturer: .....

Assembly: .....

Pre-cleaner: .....

Filter element: .....

Dust cup □:...../Unloader valve :.....

Tubular inlet □:...../Non-tubular inlet □: .....

Outlet: .....

2 Test conditions

Test dust: fine □ / coarse □ Batch No.: .....

Barometric pressure

— before test: .....kPa[1], after test: ..... kPa[1]

Temperature

— before test: .....°C, after test: ..... °C

Relative humidity

— before test: ..... %, after test: .....%

Rated air flow:.....m^3/min

Test air flow: steady □ / variable □:.....m^3/min

Applied method: Direct weighting method □ Absolute filter method □

Test terminal condition:.....

Dust concentration:.....g/m^3

Air feed pressure: .....kPa[1]

Number of used dust injectors: .....

3 Test results Diagrams - see: .....

Restriction (at test air flow): ..... kPa[1]

Differential pressure (at test air flow): ..... kPa[1]

Pressure loss (at test air flow): ..... kPa[1]

Initial efficiency (after dust fed): .....g %

Incremental efficiency: at 10 % pressure diff. rise: .....%

at 25 % pressure diff. rise: .....%

at 50 % pressure diff. rise: .....%

Full-life efficiency: .....%

Pre-cleaner efficiency: .....%

Capacity (at test terminal condition) :.....g

.....

4 General comments

.....

.....

.....

Date: .....Test conducted by: .....

1) 1 kPa = 1 000 Pa = 0,01 bar = 10 mbar

© ISO 2000 – All rights reserved

Annex D
(informative)

Report sheet on performance testing of air cleaner equipment according to ISO 5011 — Industrial application

1 Test unit ..... Model/Type No: .....

Manufacturer: .....
Assembly: .....
Pre-cleaner: .....
Primary element: .....
Secondary element: .....
Dust cup □: ..... Unloader valve □: .....
Tubular inlet □: ..... Non-tubular inlet □: .....
Outlet: .....

2 Test conditions

Test dust: fine □ / coarse □ Batch No.: .....
Test oil: .....
Barometric pressure
— before test: ..... kPa[1], after test ..... kPa[1]
Temperature
— before test: ..... °C, after test ..... °C
Relative humidity
— before test: ..... %, after test ..... %
Applied method: Direct weighing method Absolute filter method □
Rated air flow: ..... m^3/min
Test air flow: steady □ / variable □ : ..... m^3/min
Scavenge air flow: ..... m^3/min
Test terminal condition: .....
ISO Dust injector: □ ISO Heavy Duty Dust injector: □
Dust concentration: ..... g/m^3
Air feed pressure: ..... kPa[1]
Number of used dust injectors: .....

3 Test results **Diagrams - see:** .....

Restriction (at test air flow): ..... kPa[1]
Differential pressure (at test air flow): ..... kPa[1]
Pressure loss (at test air flow): ..... kPa[1]
Initial efficiency (after dust fed): ..... g ..... %
Full-life efficiency: ..... %
Pre-cleaner efficiency: ..... %
Capacity (at test terminal condition): ..... g
Dust cup served: ..... times
Oil carry-over: yes □ no □ at single flow rate: ..... m^3/min
Oil carry-over (increasing flow rates) at flow rate: ..... m^3/min

4 General comments

.....
.....
.....

Date ..... Test conducted by: .....

1) 1 kPa = 1 000 Pa = 0,01 bar = 10 mbar

© ISO 2000 – All rights reserved

Annex E
(informative)

Presentation of results — Air cleaner restriction/differential pressure versus flow

Test unit: ..... Model/Type-No.: .....

Manufacturer: .....

Assembly: .....

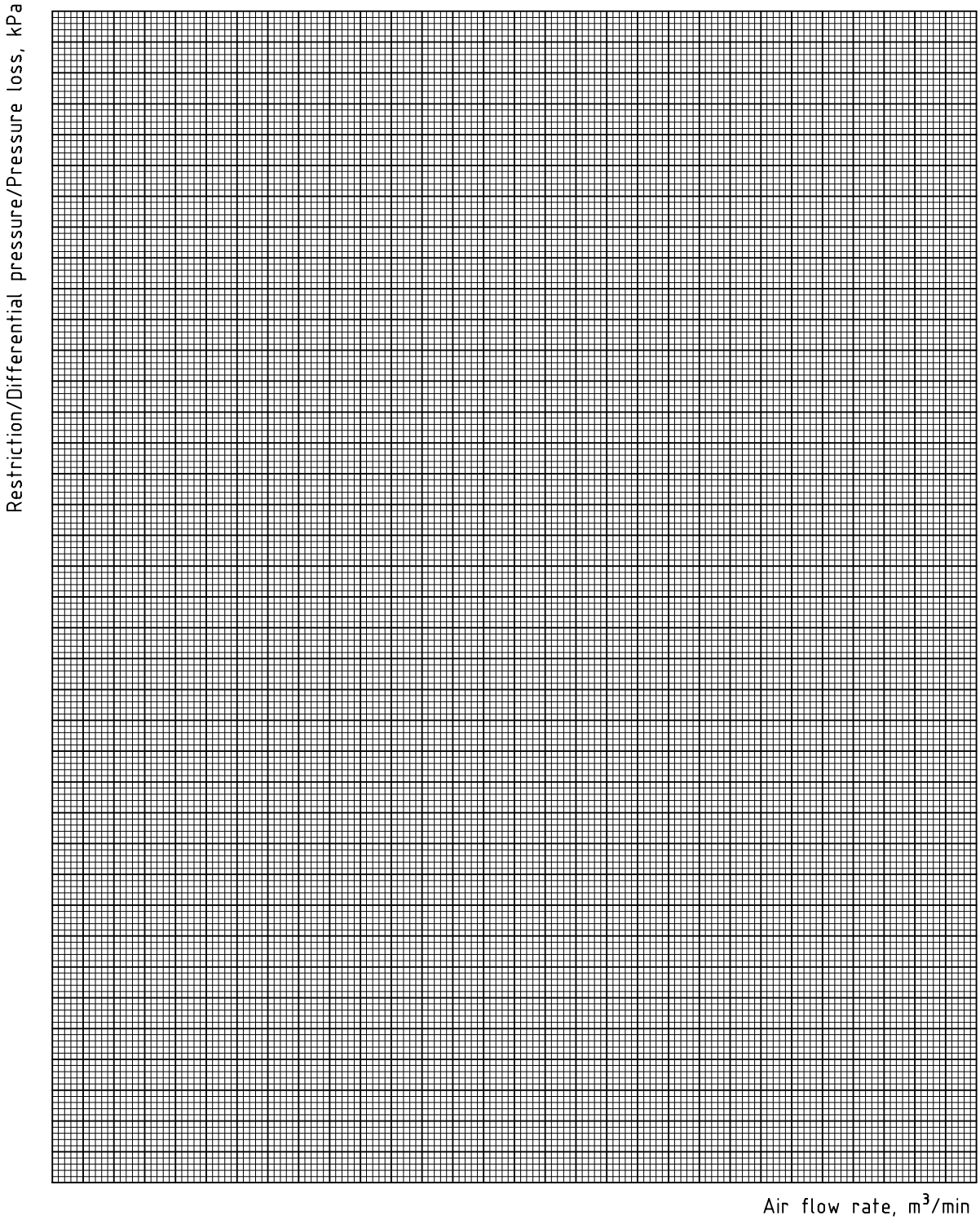

© ISO 2000 – All rights reserved

Annex F
(informative)

Presentation of results — Air cleaner capacity

Test unit: ..... Model/Type-No.: .....

Manufacturer: .....

Assembly: .....

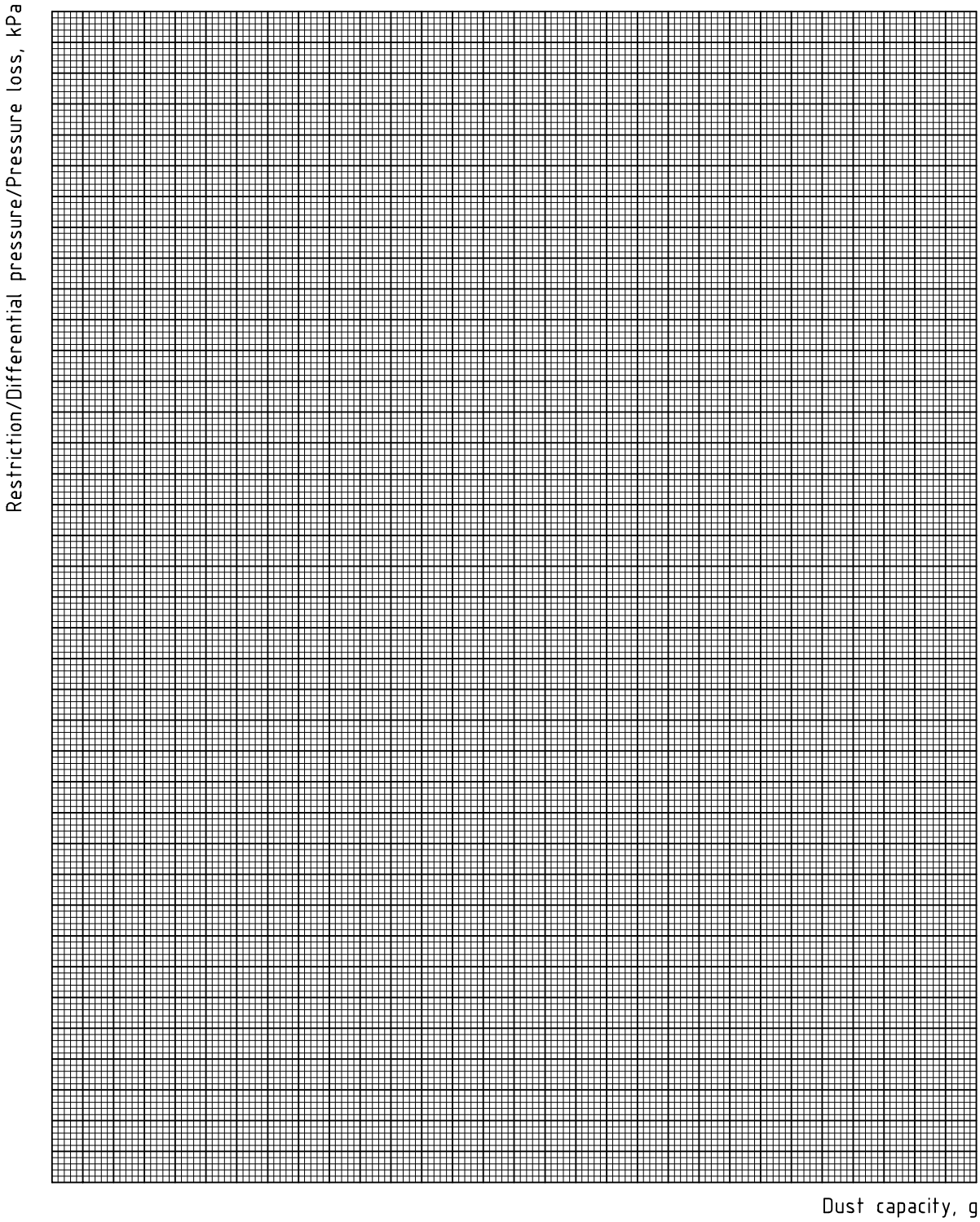

© ISO 2000 – All rights reserved

Annex G
(normative)

Airflow and resistance corrections to standard conditions

Airflow restriction/differential pressure/pressure loss and dust capacity data shall be reported for standard condtions of 20 °C and 1 013 hPa (1 013 mbar). The resistance, Δp, of the air cleaner can be represented by the following expression:

$$\Delta p = K_1 \mu V + K_2 \rho V^2$$

where

K_1 is an empirical constant;

K_2 is an empirical constant;

μ is the dynamic viscosity, in millipascal seconds;

ρ is the air density, in kilograms per cubic metre;

V is the volume flow, in cubic metres per minute;

m is the mass flow, in kilograms per minute.

Substituting $\frac{m}{\rho}$ for V:

$$\Delta p = K_1 \mu \left(\frac{m}{\rho}\right) + K_2 \rho \left(\frac{m}{\rho}\right)^2$$

Rearranging terms gives:

$$\rho \Delta p = K_1 \mu m + K_2 m^2$$

Thus by maintaining the mass flow constant and limiting the variation in ambient temperature to keep the change in viscosity small, $\rho \Delta p$ will remain constant. Therefore:

$$\rho_0 \Delta p_0 = \rho \Delta p$$

$$\Delta p_0 = \frac{\rho}{\rho_0} \Delta p$$

where subscript 0 indicates standard conditions.

© ISO 2000 – All rights reserved

Observed restriction/differential pressure/pressure loss values shall therefore be corrected to standard conditions by using the following equation:

$$\Delta p_0 = \frac{p}{1\,013} \times \frac{293}{(t+273)} \times \Delta p_r \text{, or } \Delta p_d \text{ or } \Delta p_1$$

where

p and t	are the observed ambient pressure and temperature, respectively;
Δp_r, Δp_d or Δp_1	is the measured air cleaner restriction/ differential pressure/pressure loss.

© ISO 2000 – All rights reserved

Bibliography

[1] ISO 789-8, *Agricultural tractors — Test procedures — Part 8: Engine air cleaner.*

[2] ISO 1000, *SI units and recommendations for the use of their multiples and of certain other units.*

© ISO 2000 – All rights reserved

ICS 43.060.20

Price based on 39 pages

© ISO 2000 – All rights reserved