NISTTech

LASER DOPPLER VIBROMETER EMPLOYING ACTIVE FREQUENCY FEEDBACK

Laser Doppler Vibrometer Employing Active Frequency Feedback

Description

Vibrometers accurately measure both the velocity and position of small vibration amplitudes in scientific and commercial applications. The Vibrometer (an optical interferometer) employs a feedback signal that can infer both target velocity and target position. At certain frequencies, the feedback signal provides a direct measurement of frequency shift, which measures velocity. At other frequencies the signal measures phase interference, which provides position. The addition of a variable frequency feedback signal to a conventional Laser-Doppler Michelson interferometer thus provides the capability for accurately measuring both velocity and position for small vibration amplitudes at large frequencies over a frequency range of five decades.

Images

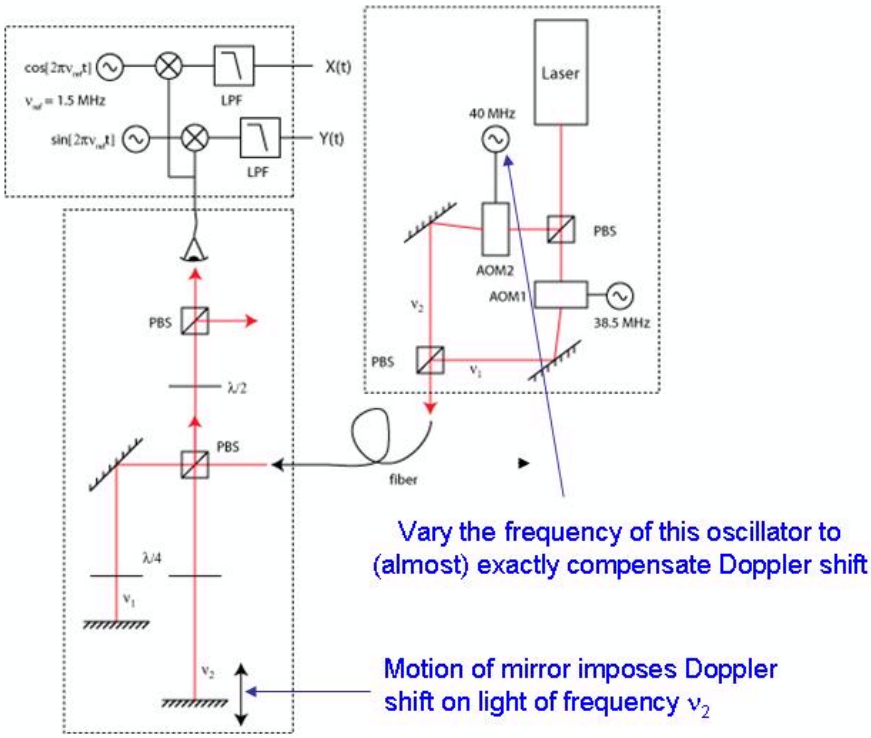

vibrometer

Applications

- **Manufacturing**
  Inspect components such as computer semiconductors and micro-electro-mechanical systems (MEMS.)
- **Optics and photonics**
  Quantifies vibrations in optical and photonic scientific instruments.
- **Mechanical engines**
  Quantifies noise and vibration in automotive and airplane engines.

Advantages

- **Simple design**
  Simplifies measurement by reducing needs for massive data storage, phase unwrapping and handling inverse mathematical functions. Provides great resolution, a low noise floor, and potentially low costs.
- **High displacement sensitivity**
  The Laser Doppler Vibrometer exhibits a high displacement sensitivity.
- **Large dynamic range**
  This new device is designed to see a small, fast "wiggle" on top of a large, slow wave.

Abstract

A laser Doppler vibrometer for vibration measurement that employs active feedback to cancel the effect of large vibration excursions at low frequencies, obviating the need to unwrap phase data. The Doppler shift of a reflective vibrating test object is sensed interferometrically and compensated by means of a voltage-controlled oscillator driving an acousto-optic modulator. For frequencies within the servo bandwidth, the feedback signal provides a direct measurement of vibration velocity. For frequencies outside the servo bandwidth, feedback biases the interferometer at a point of maximal sensitivity, thus enabling phase-sensitive measurement of the high-frequency excursions. Using two measurements, one with a low bandwidth and one with a high bandwidth, more than five decades of frequency may be spanned. This approach is of particular interest for the frequently occurring situation where vibration amplitudes at low frequency exceed an optical wavelength, but knowledge of the vibration spectrum at high frequency is also important.

Inventors

- Lawall, John R

Citations

1. A. Chijioke and J. Lawall. Laser Doppler vibrometer employing active frequench feedback. Appl Opt, 47(27), pp. 4952-8, Sept 2008.

References

- U.S. Patent #7,894,074 issued 02-22-2011, expires 12/19/2028
- Docket: 08-019

Status of Availability

active patent and available for licensing
Last Modified: 02/25/2011